P · A · R · T · 9

# CLASSICAL STRESS AND DEFORMATION ANALYSIS

# CHAPTER 36
# STRESS

**Joseph E. Shigley**
*Professor Emeritus*
*The University of Michigan*
*Ann Arbor, Michigan*

**36.1 DEFINITIONS AND NOTATION / 36.3**
**36.2 TRIAXIAL STRESS / 36.5**
**36.3 STRESS-STRAIN RELATIONS / 36.6**
**36.4 FLEXURE / 36.12**
**36.5 STRESSES DUE TO TEMPERATURE / 36.16**
**36.6 CONTACT STRESSES / 36.19**
**REFERENCES / 36.24**

## *36.1 DEFINITIONS AND NOTATION*

The general two-dimensional stress element in Fig. 36.1*a* shows two normal stresses $\sigma_x$ and $\sigma_y$, both positive, and two shear stresses $\tau_{xy}$ and $\tau_{yx}$, positive also. The element is in static equilibrium, and hence $\tau_{xy} = \tau_{yx}$. The stress state depicted by the figure is called *plane* or *biaxial stress.*

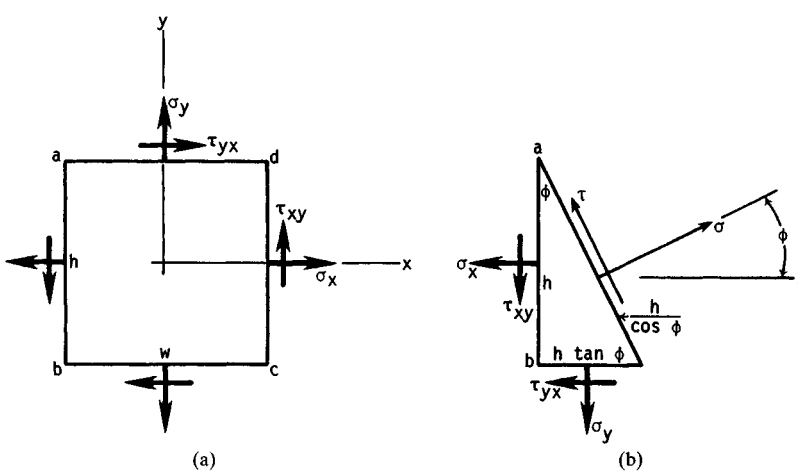


**FIGURE 36.1** Notation for two-dimensional stress. (*From* Applied Mechanics of Materials, *by Joseph E. Shigley. Copyright © 1976 by McGraw-Hill, Inc. Used with permission of the McGraw-Hill Book Company.*)

Figure 36.1*b* shows an element face whose normal makes an angle $\phi$ to the $x$ axis. It can be shown that the stress components $\sigma$ and $\tau$ acting on this face are given by the equations

$$\sigma = \frac{\sigma_x + \sigma_y}{2} + \frac{\sigma_x - \sigma_y}{2} \cos 2\phi + \tau_{xy} \sin 2\phi \tag{36.1}$$

$$\tau = -\frac{\sigma_x - \sigma_y}{2} \sin 2\phi + \tau_{xy} \cos 2\phi \tag{36.2}$$

It can be shown that when the angle $\phi$ is varied in Eq. (36.1), the normal stress $\sigma$ has two extreme values. These are called the *principal stresses,* and they are given by the equation

$$\sigma_1, \sigma_2 = \frac{\sigma_x + \sigma_y}{2} \pm \left[\left(\frac{\sigma_x - \sigma_y}{2}\right)^2 + \tau_{xy}^2\right]^{1/2} \tag{36.3}$$

The corresponding values of $\phi$ are called the *principal directions.* These directions can be obtained from

$$2\phi = \tan^{-1} \frac{2\tau_{xy}}{\sigma_x - \sigma_y} \tag{36.4}$$

The shear stresses are always zero when the element is aligned in the principal directions.

It also turns out that the shear stress $\tau$ in Eq. (36.2) has two extreme values. These and the angles at which they occur may be found from

$$\tau_1, \tau_2 = \pm \left[\left(\frac{\sigma_x - \sigma_y}{2}\right)^2 + \tau_{xy}^2\right]^{1/2} \tag{36.5}$$

$$2\phi = \tan^{-1} - \frac{\sigma_x - \sigma_y}{2\tau_{xy}} \tag{36.6}$$

The two normal stresses are equal when the element is aligned in the directions given by Eq. (36.6).

The act of referring stress components to another reference system is called *transformation of stress.* Such transformations are easier to visualize, and to solve, using a *Mohr's circle diagram.* In Fig. 36.2 we create a $\sigma\tau$ coordinate system with per-

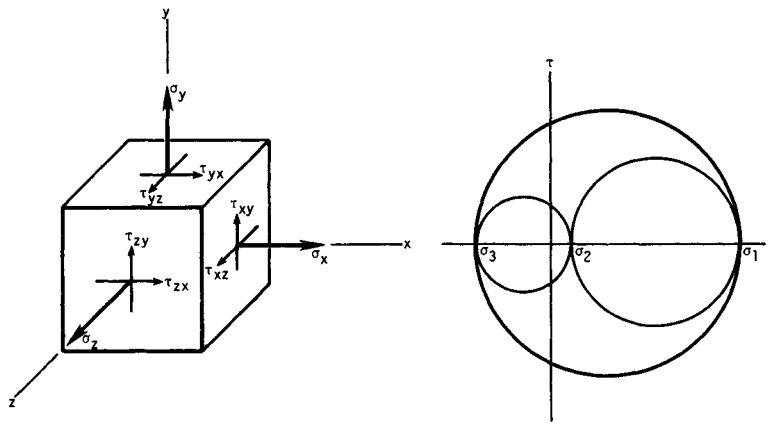


(a) (b)

**FIGURE 36.3** (*a*) General triaxial stress element; (*b*) Mohr's circles for triaxial stress.

$$\tau_{xy} = \tau_{yx} \qquad \tau_{yz} = \tau_{zy} \qquad \tau_{zx} = \tau_{xz}$$

Note that the first subscript is the coordinate normal to the element face, and the second subscript designates the axis parallel to the shear-stress component. The negative faces of the element will have shear stresses acting in the opposite direction; these are also considered as positive.

As shown in Fig. 36.3*b*, there are three principal stresses for triaxial stress states. These three are obtained from a solution of the equation

$$\sigma^3 - (\sigma_x + \sigma_y + \sigma_z)\sigma^2 + (\sigma_x\sigma_y + \sigma_x\sigma_z + \sigma_y\sigma_z - \tau_{xy}^2 - \tau_{yz}^2 - \tau_{zx}^2)\sigma$$
$$- (\sigma_x\sigma_y\sigma_z + 2\tau_{xy}\tau_{yz}\tau_{zx} - \sigma_x\tau_{yz}^2 - \sigma_y\tau_{zx}^2 - \sigma_z\tau_{xy}^2) = 0 \qquad (36.7)$$

In plotting Mohr's circles for triaxial stress, arrange the principal stresses in the order $\sigma_1 > \sigma_2 > \sigma_3$, as in Fig. 36.3*b*. It can be shown that the stress coordinates $\sigma\tau$ for any arbitrarily located plane will always lie on or *inside* the largest circle or on or *outside* the two smaller circles. The figure shows that the maximum shear stress is always

$$\tau_{max} = \frac{\sigma_1 - \sigma_3}{2} \qquad (36.8)$$

when the normal stresses are arranged so that $\sigma_1 > \sigma_2 > \sigma_3$.

## 36.3 STRESS-STRAIN RELATIONS

The stresses due to loading described as *pure tension, pure compression,* and *pure shear* are

$$\sigma = \frac{F}{A} \qquad \tau = \frac{F}{A} \qquad (36.9)$$

where $F$ is positive for tension and negative for compression and the word *pure* means that there are no other complicating effects. In each case the stress is assumed to be uniform, which requires that

- The member is straight and of a homogeneous material.
- The line of action of the force is through the centroid of the section.
- There is no discontinuity or change in cross section near the stress element.
- In the case of compression, there is no possibility of buckling.

*Unit engineering strain* $\epsilon$, often called simply *unit strain,* is the elongation or deformation of a member subjected to pure axial loading per unit of original length. Thus

$$\epsilon = \frac{\delta}{l_0} \tag{36.10}$$

where $\delta$ = total strain
$l_0$ = unstressed or original length

*Shear strain* $\gamma$ is the change in a right angle of a stress element due to pure shear.

*Hooke's law* states that, within certain limits, the stress in a material is proportional to the strain which produced it. Materials which regain their original shape and dimensions when a load is removed are called *elastic materials.* Hooke's law is expressed in equation form as

$$\sigma = E\epsilon \qquad \tau = G\gamma \tag{36.11}$$

where $E$ = the *modulus of elasticity* and $G$ = the *modulus of ridigity,* also called the *shear modulus of elasticity.*

Poisson demonstrated that, within the range of Hooke's law, a member subjected to uniaxial loading exhibits both an axial strain and a lateral strain. These are related to each other by the equation

$$\nu = -\frac{\text{lateral strain}}{\text{axial strain}} \tag{36.12}$$

where $\nu$ is called *Poisson's ratio.*

The three constants given by Eqs. (36.11) and (36.12) are often called *elastic constants.* They have the relationship

$$E = 2G(1 + \nu) \tag{36.13}$$

By combining Eqs. (36.9), (36.10), and (36.11), it is easy to show that

$$\delta = \frac{Fl}{AE} \tag{36.14}$$

which gives the total deformation of a member subjected to axial tension or compression.

A solid round bar subjected to a *pure* twisting moment or torsion has a shear stress that is zero at the center and maximum at the surface. The appropriate equations are

$$\tau = \frac{T\rho}{J} \qquad \tau_{max} = \frac{Tr}{J} \tag{36.15}$$

where $T$ = torque
$\rho$ = radius to stress element
$r$ = radius of bar
$J$ = second moment of area (polar)

The total angle of twist of such a bar, in radians, is

$$\theta = \frac{Tl}{GJ} \tag{36.16}$$

where $l$ = length of the bar. For the shear stress and angle of twist of other cross sections, see Table 36.1.

### 36.3.1 Principal Unit Strains

For a bar in uniaxial tension or compression, the principal strains are

$$\epsilon_1 = \frac{\sigma_1}{E} \qquad \epsilon_2 = -\nu\epsilon_1 \qquad \epsilon_3 = -\nu\epsilon_1 \tag{36.17}$$

Notice that the stress state is uniaxial, but the strains are triaxial.

For triaxial stress, the principal strains are

$$\begin{aligned} \epsilon_1 &= \frac{\sigma_1}{E} - \frac{\nu\sigma_2}{E} - \frac{\nu\sigma_3}{E} \\ \epsilon_2 &= \frac{\sigma_2}{E} - \frac{\nu\sigma_1}{E} - \frac{\nu\sigma_3}{E} \\ \epsilon_3 &= \frac{\sigma_3}{E} - \frac{\nu\sigma_1}{E} - \frac{\nu\sigma_2}{E} \end{aligned} \tag{36.18}$$

These equations can be solved for the principal stresses; the results are

$$\begin{aligned} \sigma_1 &= \frac{E\epsilon_1(1-\nu) + \nu E(\epsilon_2 + \epsilon_3)}{1 - \nu - 2\nu^2} \\ \sigma_2 &= \frac{E\epsilon_2(1-\nu) + \nu E(\epsilon_1 + \epsilon_3)}{1 - \nu - 2\nu^2} \\ \sigma_3 &= \frac{E\epsilon_3(1-\nu) + \nu E(\epsilon_1 + \epsilon_2)}{1 - \nu - 2\nu^2} \end{aligned} \tag{36.19}$$

The biaxial stress-strain relations can easily be obtained from Eqs. (36.18) and (36.19) by equating one of the principal stresses to zero.

**TABLE 36.1** Torsional Stress and Angular Deflection of Various Sections†

| Sectional shape | Shape constant | Shear stress |
|---|---|---|
| 1. Solid round 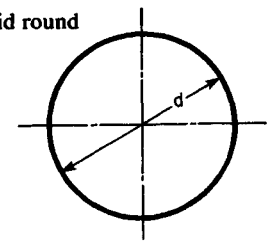  | $K = \dfrac{\pi d^4}{32}$ | $\tau_{max} = \dfrac{16T}{\pi d^3}$ |
| 2. Round tube 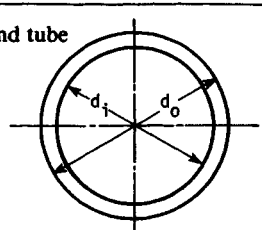  | $K = \dfrac{\pi(d_o^4 - d_i^4)}{32}$ | $\tau_{max} = \dfrac{16Td_o}{\pi(d_o^4 - d_i^4)}$ |
| 3. Square [36.1] 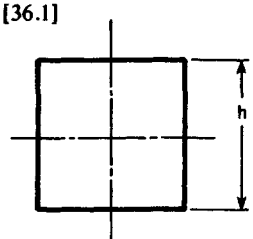  | $K = \dfrac{h^4}{7.2}$ | $\tau_{max} = \dfrac{4.8T}{h^3}$ |

**TABLE 36.1** Torsional Stress and Angular Deflection of Various Sections† (*Continued*)

| | | |
|---|---|---|
| **4. Square tube, generous fillets [36.2]** 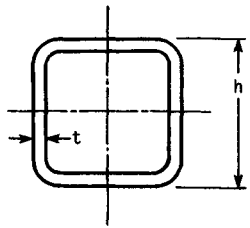  | $K = t(h - t)^3$ | $\tau \cong \dfrac{T}{2t(h - t)^2}$ |
| **5. Rectangle [36.1]** 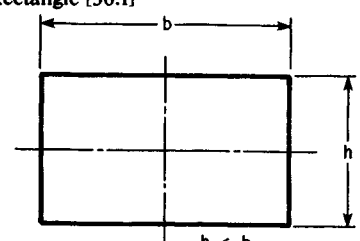  | $K = \dfrac{bh^3}{A}$<br>$A = 3 + 1.462\dfrac{h}{b} + 2.976\left(\dfrac{h}{b}\right)^2 - 0.238\left(\dfrac{h}{b}\right)^3$ | $\tau_{max} = \dfrac{T(3b + 1.8h)}{b^2h^2}$ |
| **6. Rectangular tube, generous fillets [36.2]** 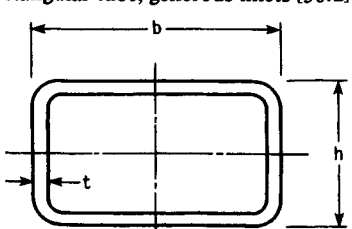  | $K = \dfrac{2t(b - t)^2(h - t)^2}{b + h - 2t}$ | $\tau \cong \dfrac{T}{2t(b - t)(h - t)}$ |

**TABLE 36.1** Torsional Stress and Angular Deflection of Various Sections† (*Continued*)

| Sectional shape | Shape constant | Shear stress |
|---|---|---|
| 7. Hexagon [36.1] 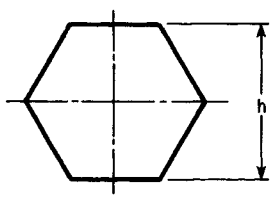  | $K = \dfrac{h^4}{8.8}$ | $\tau_{max} = \dfrac{5.7T}{h^3}$ |

† Deflection is $\theta = Tl/KG$ in rad, where $T$ = torque, $l$ = length, $K$ = shape constant, and $G$ = modulus of rigidity. See [36.2] for additional shapes in torsion.

### 36.3.2 Plastic Strain

It is important to observe that all the preceding relations are valid only when the material obeys Hooke's law.

Some materials (see Sec. 32.9), when stressed in the plastic region, exhibit a behavior quite similar to that given by Eq. (36.11). For these materials, the appropriate equation is

$$\bar{\sigma} = K\varepsilon^n \tag{36.20}$$

where $\bar{\sigma}$ = true stress
$K$ = strength coefficient
$\varepsilon$ = true plastic strain
$n$ = strain-strengthening exponent

The relations for the true stress and true strain are

$$\bar{\sigma} = \frac{F_i}{A_i} \qquad \varepsilon = \ln \frac{l_i}{l_0} \tag{36.21}$$

where $A_i$ and $l_i$ are, respectively, the instantaneous values of the area and length of a bar subjected to a load $F_i$. Note that the areas in Eqs. (36.9) are the original or unstressed areas; the subscript zero was omitted, as is customary. The relations between true and engineering (nominal) stresses and strains are

$$\bar{\sigma} = \sigma \exp \epsilon \qquad \varepsilon = \ln(\epsilon + 1) \tag{36.22}$$

## 36.4 FLEXURE

Figure 36.4*a* shows a member loaded in flexure by a number of forces $F$ and supported by reactions $R_1$ and $R_2$ at the ends. At point $C$ a distance $x$ from $R_1$, we can write

$$\Sigma M_C = \Sigma M_{\text{ext}} + M = 0 \tag{36.23}$$

where $\Sigma M_{\text{ext}} = -xR_1 + c_1F_1 + c_2F_2$ and is called the *external moment* at section $C$. The term $M$, called the *internal* or *resisting moment,* is shown in its positive direction in both parts *b* and *c* of Fig. 36.4. Figure 36.5 shows that a positive moment causes the top surface of a beam to be concave. A negative moment causes the top surface to be convex with one or both ends curved downward.

A similar relation can be defined for shear at section $C$:

$$\Sigma F_y = \Sigma F_{\text{ext}} + V = 0 \tag{36.24}$$

where $\Sigma F_{\text{ext}} = R_1 - F_1 - F_2$ and is called the *external shear force* at $C$. The term $V$, called the *internal shear force,* is shown in its positive direction in both parts *b* and *c* of Fig. 36.4.

Figure 36.6 illustrates an application of these relations to obtain a set of shear and moment diagrams.

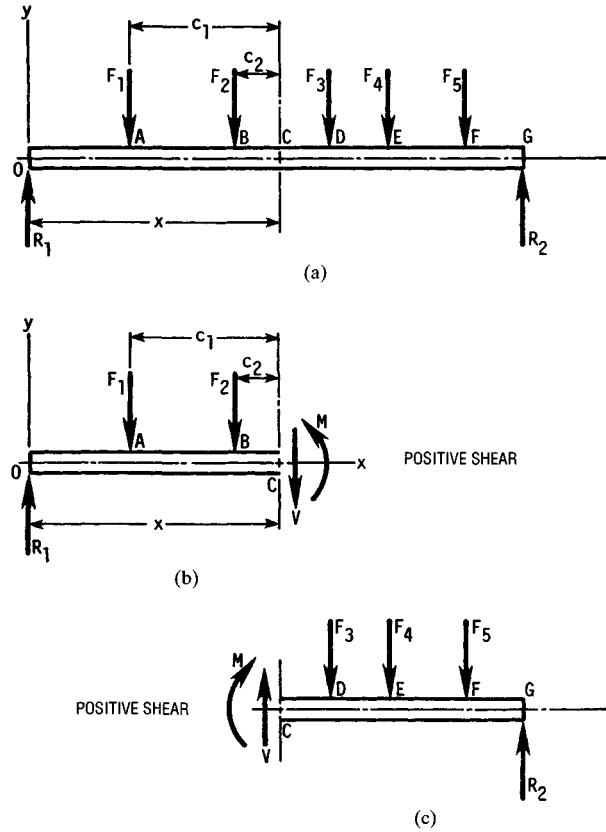


**FIGURE 36.4** Shear and moment. (*From* Applied Mechanics of Materials, *by Joseph E. Shigley. Copyright © 1976 by McGraw-Hill, Inc. Used with permission of the McGraw-Hill Book Company.*)

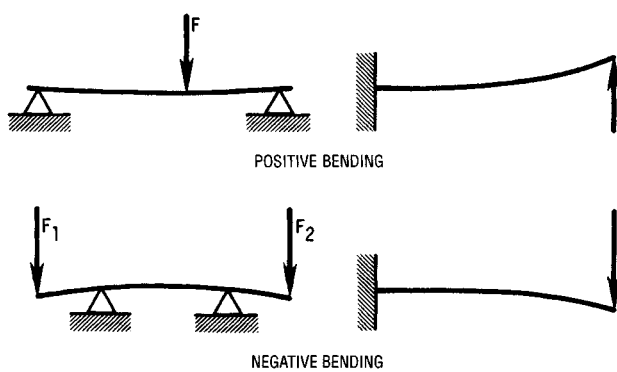


**FIGURE 36.5** Sign conventions for bending. (*From* Applied Mechanics of Materials, *by Joseph E. Shigley. Copyright © 1976 by McGraw-Hill, Inc. Used with permission of the McGraw-Hill Book Company.*)

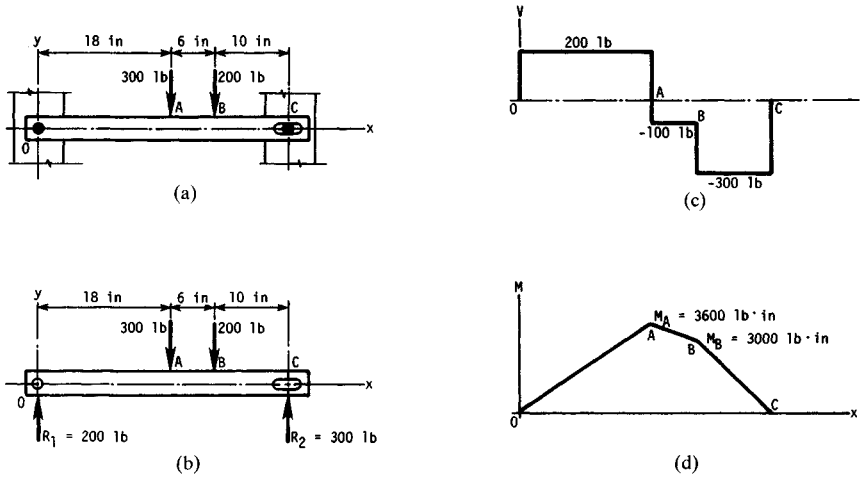


**FIGURE 36.6** (*a*) View showing how ends are secured; (*b*) loading diagram; (*c*) shear-force diagram; (*d*) bending-moment diagram. (*From* Applied Mechanics of Materials, *by Joseph E. Shigley. Copyright © 1976 by McGraw-Hill, Inc. Used with permission of the McGraw-Hill Book Company.*)

The previous relations can be expressed in a more general form as

$$V = \frac{dM}{dx} \tag{36.25}$$

If the flexure is caused by a distributed load,

$$\frac{dV}{dx} = \frac{d^2M}{dx^2} = -w \tag{36.26}$$

where $w$ = a downward-acting load in units of force per unit length. A more general load distribution can be expressed as

$$q = \lim_{\Delta x \to 0} \frac{\Delta F}{\Delta x}$$

where $q$ is called the *load intensity;* thus $q = -w$ in Eq. (36.26). Two useful facts can be learned by integrating Eqs. (36.25) and (36.26). The first is

$$\int_{V_A}^{V_B} dV = \int_{x_A}^{x_B} q\, dx = V_B - V_A \tag{36.27}$$

which states that *the area under the loading function between $x_A$ and $x_B$ is the same as the change in the shear force from A to B.* Also,

$$\int_{M_A}^{M_B} dM = \int_{x_A}^{x_B} V\, dx = M_B - M_A \tag{36.28}$$

which states that *the area of the shear-force diagram between $x_A$* and *$x_B$ is the same as the change in moment from A to B.*

Figure 36.7 distinguishes between the *neutral axis of a section* and the *neutral axis of a beam,* both of which are often referred to simply as the *neutral axis.* The assumptions used in deriving flexural relations are

- The material is isotropic and homogeneous.
- The member is straight.
- The material obeys Hooke's law.
- The cross section is constant along the length of the member.
- There is an axis of symmetry in the plane of bending (see Fig. 36.7).
- During pure bending (zero shear force), plane cross sections remain plane.

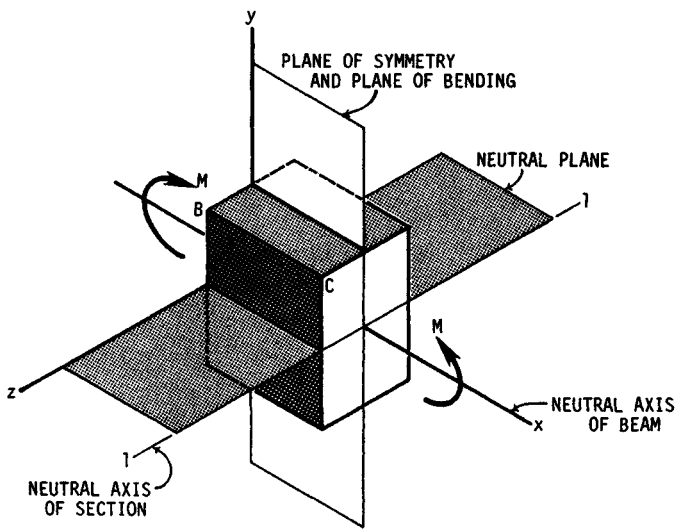


**FIGURE 36.7** The meaning of the term *neutral axis.* Note the difference between the *neutral axis of the section* and the *neutral axis of the beam.* (*From* Applied Mechanics of Materials, *by Joseph E. Shigley. Copyright © 1976 by McGraw-Hill, Inc. Used with permission of the McGraw-Hill Book Company.*)

The *flexural formula* is

$$\sigma_x = -\frac{My}{I} \tag{36.29}$$

for the section of Fig. 36.7. The formula states that a normal compression stress $\sigma_x$ occurs on a fiber at a distance $y$ from the neutral axis when a *positive moment* $M$ is applied. In Eq. (36.29), $I$ is the *second moment of area.* A number of formulas are listed in the Appendix.

The maximum flexural stress occurs at $y_{max} = c$ at the outer surface of the beam. This stress is often written in the three forms

$$\sigma = \frac{Mc}{I} \qquad \sigma = \frac{M}{I/c} \qquad \sigma = \frac{M}{Z} \tag{36.30}$$

where $Z$ is called the *section modulus.* Equations (36.30) can also be used for beams having unsymmetrical sections provided that the plane of bending coincides with one of the two principal axes of the section.

When shear forces are present, as in Fig. 36.6*c*, a member in flexure will also experience shear stresses as given by the equation

$$\tau = \frac{VQ}{Ib} \tag{36.31}$$

where $b$ = section width, and $Q$ = first moment of a vertical face about the neutral axis and is

$$Q = \int_{y_1}^{c} y\, dA \tag{36.32}$$

For a rectangular section,

$$Q = \int_{y_1}^{c} y\, dA = b \int_{y_1}^{c} y\, dy = \frac{b}{2}(c^2 - y_1^2)$$

Substituting this value of $Q$ into Eq. (36.31) gives

$$\tau = \frac{V}{2I}(c^2 - y_1^2)$$

Using $I = Ac^2/3$, we learn that

$$\tau = \frac{3V}{2A}\left(1 - \frac{y_1^2}{c^2}\right) \tag{36.33}$$

The value of $b$ for other sections is measured as shown in Fig. 36.8.

In determining shear stress in a beam, the dimension $b$ is not always measured parallel to the neutral axis. The beam sections shown in Fig. 36.8 show how to measure $b$ in order to compute the static moment $Q$. It is the tendency of the shaded area to slide relative to the unshaded area which causes the shear stress.

*Shear flow* $q$ is defined by the equation

$$q = \frac{VQ}{I} \tag{36.34}$$

where $q$ is in force units per unit length of the beam at the section under consideration. So shear flow is simply the shear force per unit length at the section defined by $y = y_1$. When the shear flow is known, the shear stress is determined by the equation

$$\tau = \frac{q}{b} \tag{36.35}$$

## 36.5 STRESSES DUE TO TEMPERATURE

A *thermal stress* is caused by the existence of a *temperature gradient* in a member. A *temperature stress* is created in a member when it is *constrained* so as to prevent expansion or contraction due to temperature change.

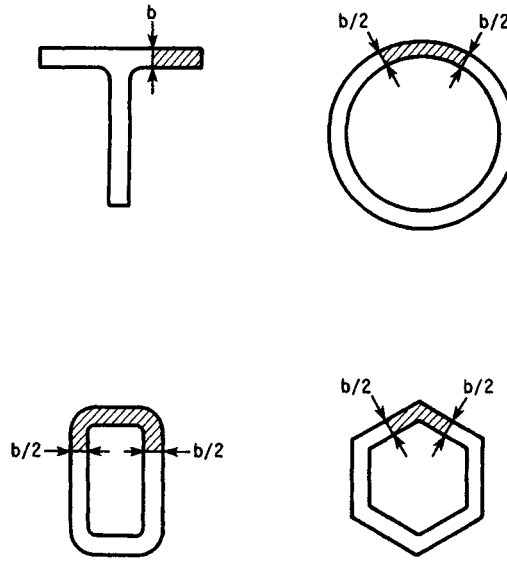


**FIGURE 36.8** Correct way to measure dimension $b$ to determine shear stress for various sections. (*From* Applied Mechanics of Materials, *by Joseph E. Shigley. Copyright © 1976 by McGraw-Hill, Inc. Used with permission of the McGraw-Hill Book Company.*)

### 36.5.1 Temperature Stresses

These stresses are found by assuming that the member is not constrained and then computing the stresses required to cause it to assume its original dimensions. If the temperature of an unrestrained member is uniformly increased, the member expands and the normal strain is

$$\epsilon_x = \epsilon_y = \epsilon_z = \alpha(\Delta T) \tag{36.36}$$

where $\Delta T$ = temperature change and $\alpha$ = *coefficient of linear expansion.* The coefficient of linear expansion increases to some extent with temperature. Some mean values for various materials are shown in Table 36.2.

Figure 36.9 illustrates two examples of temperature stresses. For the bar in Fig. 36.9*a*,

$$\sigma_x = -\alpha(\Delta T)E \qquad \sigma_y = \sigma_z = -\nu\sigma_x \tag{36.37}$$

The stresses in the flat plate of Fig. 36.9*b* are

$$\sigma_x = \sigma_y = -\frac{\alpha(\Delta T)E}{1-\nu} \qquad \sigma_z = -\nu\sigma_x \tag{36.38}$$

**TABLE 36.2** Coefficients of Linear Expansion

| Material | Celsius scale | | Fahrenheit scale | |
|---|---|---|---|---|
| | $10^6\alpha$ | °C | $10^6\alpha$ | °F |
| Aluminum | 24.0 | 20–100 | 13.4 | 68–212 |
| Aluminum | 26.7 | 20–300 | 14.9 | 68–572 |
| Brass (cast) | 18.75 | 0–100 | 10.4 | 32–212 |
| Brass (wire) | 19.3 | 0–100 | 10.7 | 32–212 |
| Brass (spring) | 19.8 | 25–300 | 11.0 | 77–572 |
| Cast iron | 10.6 | 40 | 5.9 | 104 |
| Carbon steel | 10.8 | 40 | 6.0 | 104 |
| Carbon steel | 11.5 | 100–200 | 6.4 | 212–392 |
| Carbon steel | 15 | 300–400 | 8.3 | 572–752 |
| Magnesium (cast) | 27.0 | 20–100 | 15.0 | 68–212 |
| Nickel steel (10%) | 13.0 | 20 | 7.2 | 68 |
| Stainless steel (hardened) | 9.6 | 20–100 | 5.3 | 68–212 |
| Stainless steel (hardened) | 9.8 | 20–200 | 5.5 | 68–392 |
| Stainless steel (annealed) | 10.3 | 20–100 | 5.7 | 68–212 |
| Stainless steel (annealed) | 10.7 | 20–200 | 6.0 | 68–392 |

### 36.5.2 Thermal Stresses

Heating of the top surface of the restrained member in Fig. 36.10*a* causes end moments of

$$M = \frac{\alpha(\Delta T)EI}{h} \tag{36.39}$$

and maximum bending stresses of

$$\sigma_x = \pm\frac{\alpha(\Delta T)E}{2} \tag{36.40}$$

with compression of the top surface. If the constraints are removed, the bar will curve to a radius

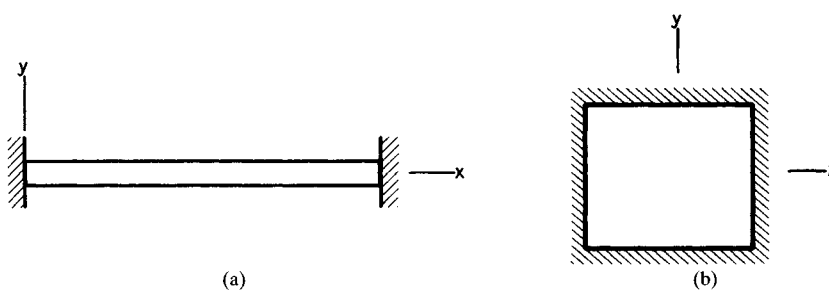


**FIGURE 36.9** Examples of temperature stresses. In each case the temperature rise $\Delta T$ is uniform throughout. (*a*) Straight bar with ends restrained; (*b*) flat plate with edges restrained.

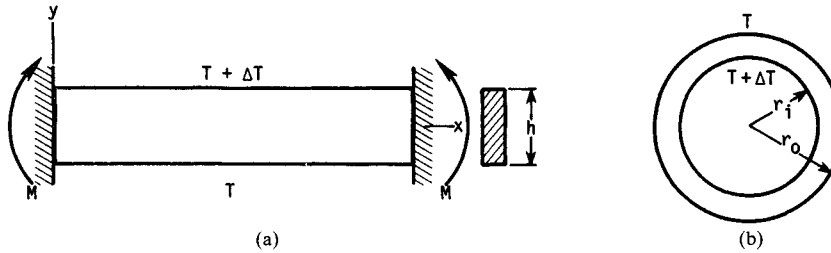


**FIGURE 36.10** Examples of thermal stresses. (*a*) Rectangular member with ends restrained (temperature difference between top and bottom results in end moments and bending stresses); (*b*) thick-walled tube has maximum stresses in tangential and longitudinal directions.

$$r = \frac{h}{\alpha(\Delta T)}$$

The thick-walled tube of Fig. 36.10*b* with a hot interior surface has tangential and longitudinal stresses in the outer and inner surfaces of magnitude

$$\sigma_{lo} = \sigma_{to} = \frac{\alpha(\Delta T)E}{2(1-\nu)\ln(r_o/r_i)}\left[1 - \frac{2r_i^2 \ln(r_o/r_i)}{r_o^2 - r_i^2}\right] \tag{36.41}$$

$$\sigma_{li} = \sigma_{ti} = \frac{-\alpha(\Delta T)E}{2(1-\nu)\ln(r_o/r_i)}\left[1 - \frac{2r_o^2 \ln(r_o/r_i)}{r_o^2 - r_i^2}\right] \tag{36.42}$$

where the subscripts $i$ and $o$ refer to the inner and outer radii, respectively, and the subscripts $t$ and $l$ refer to the tangential (circumferential) and longitudinal directions. Radial stresses of lesser magnitude will also exist, although not at the inner or outer surfaces.

If the tubing of Fig. 36.10*b* is thin, then the inner and outer stresses are equal, although opposite, and are

$$\begin{aligned} \sigma_{lo} = \sigma_{to} &= \frac{\alpha(\Delta T)E}{2(1-\nu)} \\ \sigma_{li} = \sigma_{ti} &= -\frac{\alpha(\Delta T)E}{2(1-\nu)} \end{aligned} \tag{36.43}$$

at points not too close to the tube ends.

## 36.6 CONTACT STRESSES

When two elastic bodies having curved surfaces are pressed against each other, the initial point or line of contact changes into area contact, because of the deformation, and a three-dimensional state of stress is induced in both bodies. The shape of the contact area was originally deduced by Hertz, who assumed that the curvature of the

two bodies could be approximated by second-degree surfaces. For such bodies, the contact area was found to be an ellipse. Reference [36.3] contains a comprehensive bibliography.

As indicated in Fig. 36.11, there are four special cases in which the contact area is a circle. For these four cases, the maximum pressure occurs at the center of the contact area and is

$$p_o = \frac{3F}{2\pi a^2} \tag{36.44}$$

where $a$ = the radius of the contact area and $F$ = the normal force pressing the two bodies together.

In Fig. 36.11, the $x$ and $y$ axes are in the plane of the contact area and the $z$ axis is normal to this plane. The maximum stresses occur on this axis, they are principal stresses, and their values for all four cases in Fig. 36.11 are

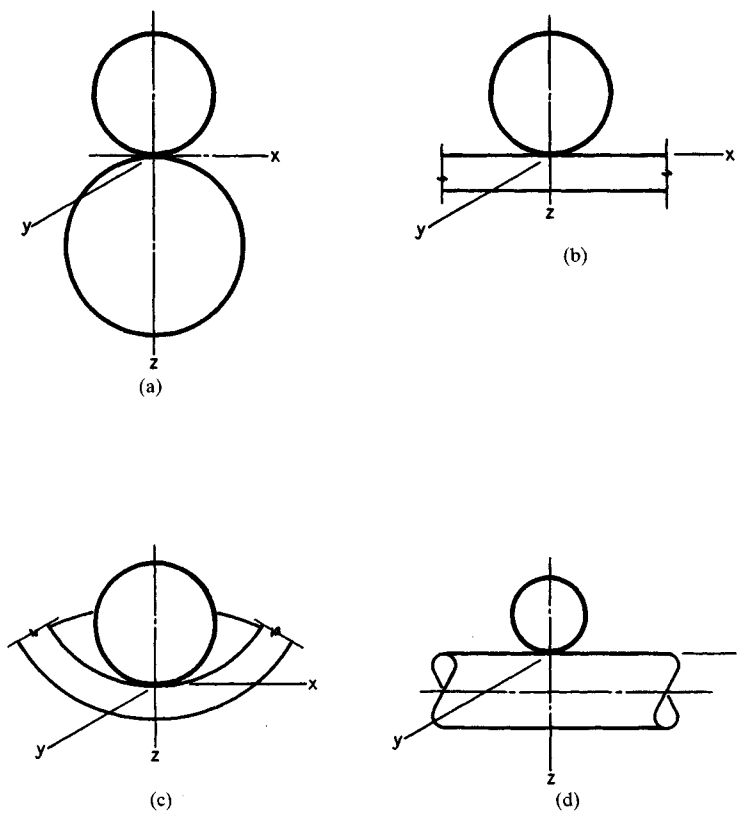


**FIGURE 36.11** Contacting bodies having a circular contact area. (*a*) Two spheres; (*b*) sphere and plate; (*c*) sphere and spherical socket; (*d*) crossed cylinders of equal diameters.

$$\sigma_x = \sigma_y = -p_o \left\{ \left(1 - \frac{z}{a} \tan^{-1} \frac{1}{z/a}\right)(1+\nu) - \frac{1}{2(1+z^2/a^2)} \right\} \tag{36.45}$$

$$\sigma_z = \frac{-p_o}{1+z^2/a^2} \tag{36.46}$$

These equations are plotted in Fig. 36.12 together with the two shear stresses $\tau_{xz}$ and $\tau_{yz}$. Note that $\tau_{xy} = 0$ because $\sigma_x = \sigma_y$.

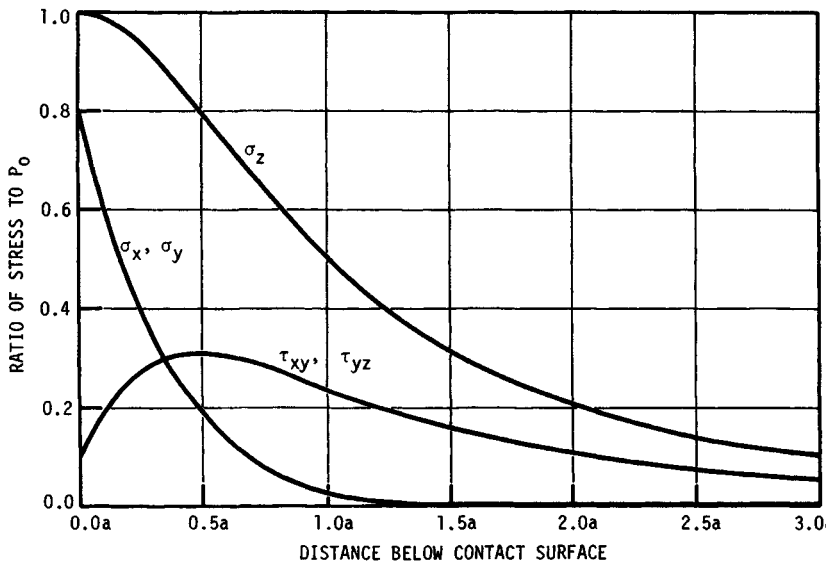


**FIGURE 36.12** Magnitude of the stress components on the $z$ axis below the surface as a function of the maximum pressure. Note that the two shear-stress components are maximum slightly below the surface. The chart is based on a Poisson's ratio of 0.30.

The radii $a$ of the contact circles depend on the geometry of the contacting bodies. For two spheres, each having the same diameter $d$, or for two crossed cylinders, each having the diameter $d$, and in each case with like materials, the radius is

$$a = \left(\frac{3Fd}{8} \frac{1-\nu^2}{E}\right)^{1/3} \tag{36.47}$$

where $\nu$ and $E$ are the elastic constants.

For two spheres of unlike materials having diameters $d_1$ and $d_2$, the radius is

$$a = \left[\frac{3F}{8} \frac{d_1 d_2}{d_1 + d_2} \left(\frac{1-\nu_1^2}{E_1} + \frac{1-\nu_2^2}{E_2}\right)\right]^{1/3} \tag{36.48}$$

For a sphere of diameter $d$ and a flat plate of unlike materials, the radius is

$$a = \left[\frac{3Fd}{8}\left(\frac{1-\nu_1^2}{E_1} + \frac{1-\nu_2^2}{E_2}\right)\right]^{1/3} \tag{36.49}$$

For a sphere of diameter $d_1$ and a spherical socket of diameter $d_2$ of unlike materials, the radius is

$$a = \left[\frac{3F}{8}\frac{d_1 d_2}{d_2 - d_1}\left(\frac{1-\nu_1^2}{E_1} + \frac{1-\nu_2^2}{E_2}\right)\right]^{1/3} \tag{36.50}$$

Contacting cylinders with parallel axes subjected to a normal force have a rectangular contact area. We specify an $xy$ plane coincident with the contact area with the $x$ axis parallel to the cylinder axes. Then, using a right-handed coordinate system, the stresses along the $z$ axis are maximum and are

$$\sigma_x = -2\nu p_o\left[\left(1 + \frac{z^2}{b^2}\right)^{1/2} - \frac{z}{b}\right] \tag{36.51}$$

$$\sigma_y = -p_o\left[\left(2 - \frac{1}{1 + z^2/b^2}\right)\left(1 + \frac{z^2}{b^2}\right)^{1/2} - \frac{2z}{b}\right] \tag{36.52}$$

$$\sigma_z = \frac{-p_o}{(1 + z^2/b^2)^{1/2}} \tag{36.53}$$

where the maximum pressure occurs at the origin of the coordinate system in the contact zone and is

$$p_o = \frac{2F}{\pi b l} \tag{36.54}$$

where $l$ = the length of the contact zone measured parallel to the cylinder axes, and $b$ = the half width. Equations (36.51) to (36.53) give the principal stresses. These equations are plotted in Fig. 36.13. The corresponding shear stresses can be found from a Mohr's circle; they are plotted in Fig. 36.14. Note that the maximum is either $\tau_{xz}$ or $\tau_{yz}$ depending on the depth below the contact surface.

The half width $b$ depends on the geometry of the contacting cylinders. The following cases arise most frequently: Two cylinders of equal diameter and of the same material have a half width of

$$b = \left(\frac{2Fd}{\pi l}\frac{1-\nu^2}{E}\right)^{1/2} \tag{36.55}$$

For two cylinders of unequal diameter and unlike materials, the half width is

$$b = \left[\frac{2F}{\pi l}\frac{d_1 d_2}{d_1 + d_2}\left(\frac{1-\nu_1^2}{E_1} + \frac{1-\nu_2^2}{E_2}\right)\right]^{1/2} \tag{36.56}$$

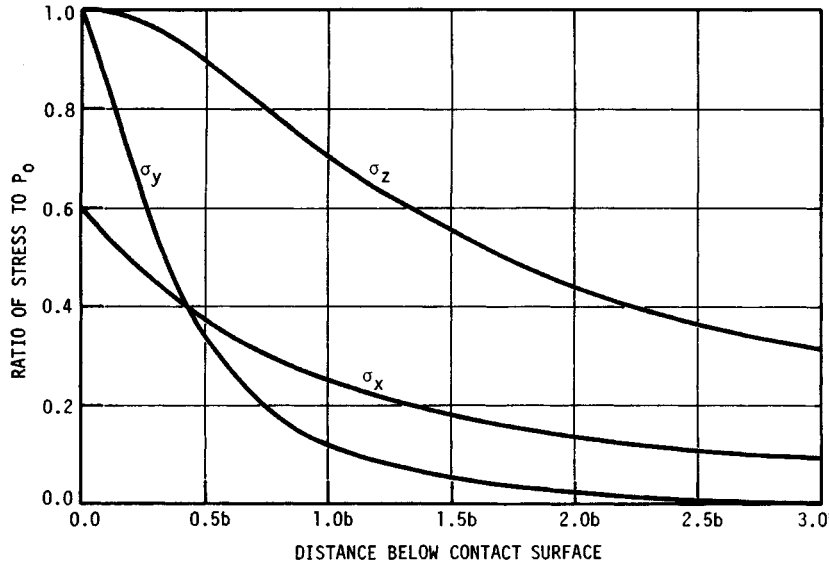


**FIGURE 36.13** Magnitude of the principal stresses on the $z$ axis below the surface as a function of the maximum pressure for contacting cylinders. Based on a Poisson's ratio of 0.30.

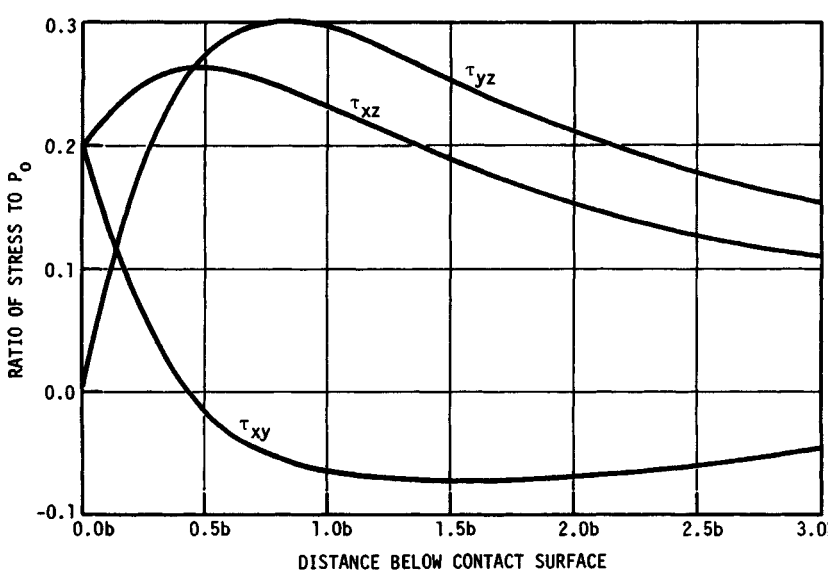


**FIGURE 36.14** Magnitude of the three shear stresses computed from Fig. 36.13.

For a cylinder of diameter $d$ in contact with a flat plate of unlike material, the result is

$$b = \left[\frac{2Fd}{\pi l}\left(\frac{1-\nu_1^2}{E_1} + \frac{1-\nu_2^2}{E_2}\right)\right]^{1/2} \tag{36.57}$$

The half width for a cylinder of diameter $d_1$ pressing against a cylindrical socket of diameter $d_2$ of unlike material is

$$b = \left[\frac{2F}{\pi l}\frac{d_1 d_2}{d_2 - d_1}\left(\frac{1-\nu_1^2}{E_1} + \frac{1-\nu_2^2}{E_2}\right)\right]^{1/2} \tag{36.58}$$

## REFERENCES

36.1 F. R. Shanley, *Strength of Materials,* McGraw-Hill, New York, 1957, p. 509.

36.2 W. C. Young, *Roark's Formulas for Stress and Strain,* 6th ed., McGraw-Hill, 1989, p. 348–359.

36.3 J. L. Lubkin, "Contact Problems," in W. Flugge (ed.), *Handbook of Engineering Mechanics,* McGraw-Hill, New York, 1962, pp. 42-10 to 42-12.