CHAPTER 38
CURVED BEAMS AND RINGS

Joseph E. Shigley
Professor Emeritus
The University of Michigan
Ann Arbor, Michigan

38.1 BENDING IN THE PLANE OF CURVATURE / 38.2
38.2 CASTIGLIANO'S THEOREM / 38.2
38.3 RING SEGMENTS WITH ONE SUPPORT / 38.3
38.4 RINGS WITH SIMPLE SUPPORTS / 38.10
38.5 RING SEGMENTS WITH FIXED ENDS / 38.15
REFERENCES / 38.22

NOTATION

A	Area, or a constant
B	Constant
C	Constant
E	Modulus of elasticity
e	Eccentricity
F	Force
G	Modulus of rigidity
I	Second moment of area (Table A.1)
K	Shape constant (Table 36.1), or second polar moment of area
M	Bending moment
P	Reduced load
Q	Fictitious force
R	Force reaction
r	Ring radius
$\bar{r}$	Centroidal ring radius
T	Torsional moment
U	Strain energy
V	Shear force
W	Resultant of a distributed load
w	Unit distributed load
X	Constant

Y Constant
y Deflection
Z Constant
γ Load angle
ϕ Span angle, or slope
σ Normal stress
θ Angular coordinate or displacement

Methods of computing the stresses in curved beams for a variety of cross sections are included in this chapter. Rings and ring segments loaded normal to the plane of the ring are analyzed for a variety of loads and span angles, and formulas are given for bending moment, torsional moment, and deflection.

38.1 BENDING IN THE PLANE OF CURVATURE

The distribution of stress in a curved member subjected to a bending moment in the plane of curvature is hyperbolic ([38.1], [38.2]) and is given by the equation

$$\sigma = \frac{My}{Ae(r-e-y)} \tag{38.1}$$

where $r =$ radius to centroidal axis
$y =$ distance from neutral axis
$e =$ shift in neutral axis due to curvature (as noted in Table 38.1)

The moment M is computed about the *centroidal axis,* not the neutral axis. The maximum stresses, which occur on the extreme fibers, may be computed using the formulas of Table 38.1.

In most cases, the bending moment is due to forces acting to one side of the section. In such cases, be sure to add the resulting axial stress to the maximum stresses obtained using Table 38.1.

38.2 CASTIGLIANO'S THEOREM

A complex structure loaded by any combination of forces, moments, and torques can be analyzed for deflections by using the elastic energy stored in the various components of the structure [38.1]. The method consists of finding the total strain energy stored in the system by all the various loads. Then the displacement corresponding to a particular force is obtained by taking the partial derivative of the total energy with respect to that force. This procedure is called *Castigliano's theorem.* General expressions may be written as

$$y_i = \frac{\partial U}{\partial F_i} \qquad \theta_i = \frac{\partial U}{\partial T_i} \qquad \phi_i = \frac{\partial U}{\partial M_i} \tag{38.2}$$

where $U =$ strain energy stored in structure
$y_i =$ displacement of point of application of force F_i in the direction of F_i

$\theta_i =$ angular displacement at T_i
$\phi_i =$ slope or angular displacement at moment M_i

If a displacement is desired at a point on the structure where no force or moment exists, then a fictitious force or moment is placed there. When the expression for the corresponding displacement is developed, the fictitious force or moment is equated to zero, and the remaining terms give the deflection at the point where the fictitious load had been placed.

Castigliano's method can also be used to find the reactions in indeterminate structures. The procedure is simply to substitute the unknown reaction in Eq. (38.2) and use zero for the corresponding deflection. The resulting expression then yields the value of the unknown reaction.

It is important to remember that the displacement-force relation must be linear. Otherwise, the theorem is not valid.

Table 38.2 summarizes strain-energy relations.

38.3 RING SEGMENTS WITH ONE SUPPORT

Figure 38.1 shows a cantilevered ring segment fixed at C. The force F causes bending, torsion, and direct shear. The moments and torques at the fixed end C and at any section B are shown in Table 38.3. The shear at C is $R_C = F$. Stresses in the ring can be computed using the formulas of Chap. 36.

To obtain the deflection at end A, we use Castigliano's theorem. Neglecting direct shear and noting from Fig. 38.1*b* that $l = r\,d\theta$, we determine the strain energy from Table 38.2 to be

$$U = \int_0^{\phi} \frac{M^2 r\,d\theta}{2EI} + \int_0^{\phi} \frac{T^2 r\,d\theta}{2GK} \tag{38.3}$$

Then the deflection y at A and in the direction of F is computed from

$$y = \frac{\partial U}{\theta F} = \frac{r}{EI}\int_0^{\phi} M\frac{\partial M}{\partial F}\,d\theta + \frac{r}{GK}\int_0^{\phi} T\frac{\partial T}{\partial F}\,d\theta \tag{38.4}$$

The terms for this relation are shown in Table 38.3. It is convenient to arrange the solution in the form

$$y = \frac{Fr^3}{2}\left(\frac{A}{EI} + \frac{B}{GK}\right) \tag{38.5}$$

where the coefficients A and B are related only to the span angle. These are listed in Table 38.3.

Figure 38.2*a* shows another cantilevered ring segment, loaded now by a distributed load. The resultant load is $W = wr\phi$; a shear reaction $R = W$ acts upward at the fixed end C, in addition to the moment and torque reactions shown in Table 38.3.

A force $W = wr\theta$ acts at the centroid of segment AB in Fig. 38.2*b*. The centroidal radius is

$$\bar{r} = \frac{2r\sin(\theta/2)}{\theta} \tag{38.6}$$

TABLE 38.1 Eccentricities and Stress Factors for Curved Beams†

1. Rectangle

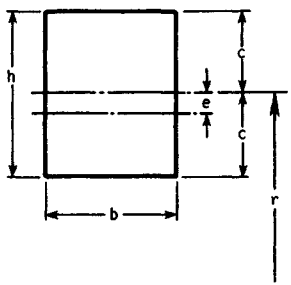

$$e = r - \frac{h}{\ln\left(\frac{r+c}{r-c}\right)} \qquad K_i = \frac{c(c-e)}{3e(r-c)} \qquad K_o = \frac{c(c+e)}{3e(r+c)}$$

2. Solid round

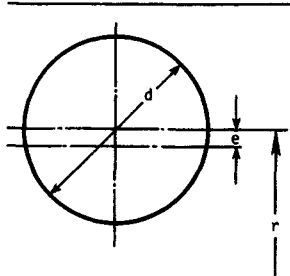

$$e = r - \frac{d^2}{4(2r - \sqrt{4r^2 - d^2})} \qquad K_i = \frac{d(d-2e)}{8e(2r-d)} \qquad K_o = \frac{d(d+2e)}{8e(2r+d)}$$

TABLE 38.1 Eccentricities and Stress Factors for Curved Beams† *(Continued)*

3. Hollow round

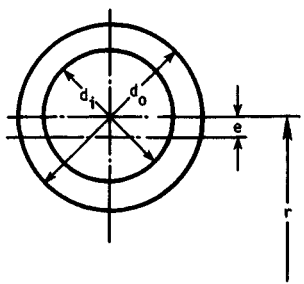

$$e = r - \frac{d_o^2 - d_i^2}{4(\sqrt{4r^2 - d_i^2} - \sqrt{4r^2 - d_o^2})} \qquad K_i = \frac{2I(d_o - 2e)}{Ad_oe(2r - d_o)}$$

$$K_o = \frac{2I(d_o + 2e)}{Ad_oe(2r + d_o)}$$

4. Hollow rectangle

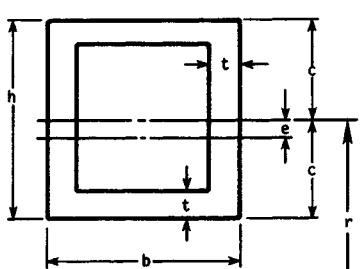

$$e = r - \frac{A}{b \ln\left(\frac{r + t - c}{r - c}\right) + 2t \ln\left(\frac{r + c - t}{r + t - c}\right) + b \ln\left(\frac{r + c}{r + c - t}\right)}$$

$$K_i = \frac{I(c - e)}{Aec(r - c)} \qquad K_o = \frac{I(c + e)}{Aec(r + c)}$$

TABLE 38.1 Eccentricities and Stress Factors for Curved Beams† (*Continued*)

5. Trapezoid

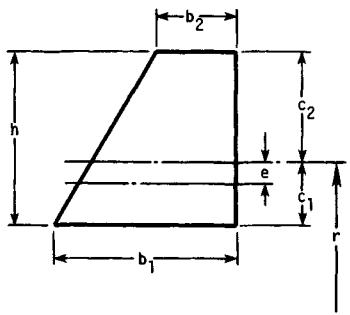

$$e = r - \frac{A}{\dfrac{b_1(r + c_2) - b_2(r - c_1)}{h} \ln\left(\dfrac{r + c_2}{r - c_1}\right) - (b_1 - b_2)}$$

$$K_i = \frac{I(c_1 - e)}{Aec_1(r - c_1)} \qquad K_o = \frac{I(c_2 + e)}{Aec_2(r + c_2)}$$

6. T Section

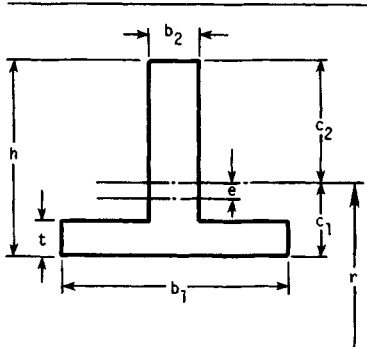

$$e = r - \frac{A}{b_1 \ln\left(\dfrac{r + t - c_1}{r - c_1}\right) + b_2 \ln\left(\dfrac{r + c_2}{r + t - c_1}\right)}$$

$$K_i = \frac{I(c_1 - e)}{Aec_1(r - c_1)} \qquad K_o = \frac{I(c_2 + e)}{Aec_2(r + c_2)}$$

TABLE 38.1 Eccentricities and Stress Factors for Curved Beams† (*Continued*)

7. U Section

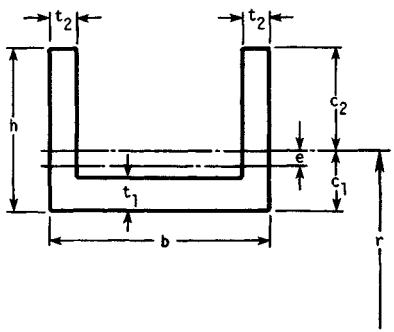

$$e = r - \frac{A}{b \ln\left(\dfrac{r + t_1 - c_1}{r - c_1}\right) + 2t_2 \ln\left(\dfrac{r + c_2}{r + t_1 - c_1}\right)}$$

$$K_i = \frac{I(c_1 - e)}{Aec_1(r - c_1)} \qquad K_o = \frac{I(c_2 + e)}{Aec_2(r + c_2)}$$

†Notation: r = radius of curvature to centroidal axis of section; A = area; I = second moment of area; e = distance from centroidal axis to neutral axis; $\sigma_i = K_i\sigma$ and $\sigma_o = K_o\sigma$ where σ_i and σ_o are the normal stresses on the fibers having the smallest and largest radii of curvature, respectively, and σ are the corresponding stresses computed on the same fibers of a straight beam. (Formulas for A and I can be found in Table A.1.)

TABLE 38.2 Strain-Energy Formulas

Loading	Formula
1. Axial force F	$U = \dfrac{F^2 l}{2AE}$
2. Shear force F	$U = \dfrac{F^2 l}{2AG}$
3. Bending moment M	$U = \displaystyle\int \frac{M^2\,dx}{2EI}$
4. Torsional moment T	$U = \dfrac{T^2 l}{2GK}$

To determine the deflection of end A, we employ a fictitious force Q acting down at end A. Then the deflection is

$$y = \frac{\partial U}{\partial Q} = \frac{r}{EI}\int_0^{\phi} M\frac{\partial M}{\partial Q}\,d\theta + \frac{r}{GK}\int_0^{\phi} T\frac{\partial T}{\partial Q}\,d\theta \tag{38.7}$$

The components of the moment and torque due to Q can be obtained by substituting Q for F in the moment and torque equations in Table 38.3 for an end load F; then the total of the moments and torques is obtained by adding this result to the equations for M and T due only to the distributed load. When the terms in Eq. (38.7) have

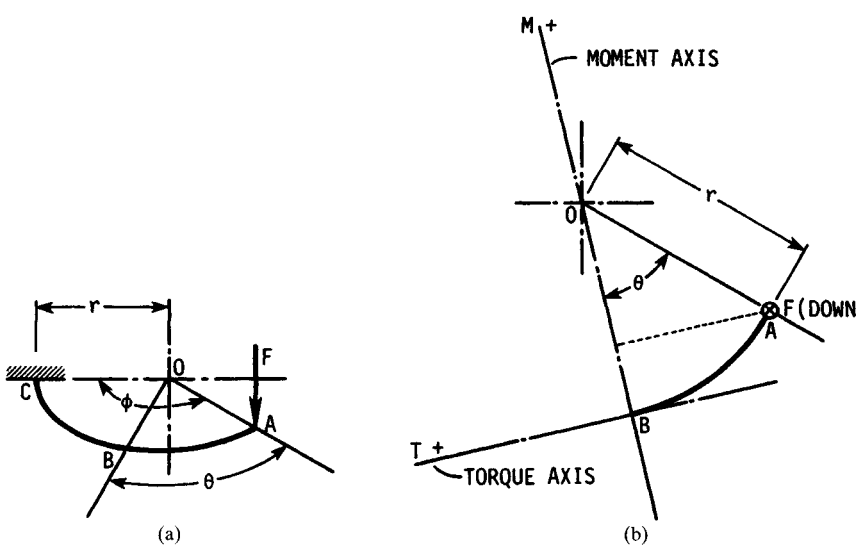

FIGURE 38.1 (*a*) Ring segment of span angle ϕ loaded by force F normal to the plane of the ring. (*b*) View of portion of ring AB showing positive directions of the moment and torque for section at B.

TABLE 38.3 Formulas for Ring Segments with One Support

Loading	Term	Formula
End load F	Moment Torque	$M = Fr \sin\theta \quad M_C = Fr \sin\phi$ $T = Fr(1 - \cos\theta) \quad T_C = Fr(1 - \cos\phi)$
	Derivatives	$\dfrac{\partial M}{\partial F} = r \sin\theta \quad \dfrac{\partial T}{\partial F} = r(1 - \cos\theta)$
	Deflection coefficients	$A = \phi - \sin\phi \cos\phi$ $B = 3\phi - 4 \sin\phi + \sin\phi \cos\phi$
Distributed load w; fictitious load Q	Moment Torque	$M = wr^2(1 - \cos\theta) \quad M_C = wr^2(1 - \cos\phi)$ $T = wr^2(\theta - \sin\theta) \quad T_C = wr^2(\phi - \sin\phi)$
	Derivatives	$\dfrac{\partial M}{\partial Q} = r \sin\theta \quad \dfrac{\partial T}{\partial Q} = r(1 - \cos\theta)$
	Deflection coefficients	$A = 2 - 2\cos\phi - \sin^2\phi$ $B = \phi^2 - 2\phi \sin\phi + \sin^2\phi$

been formed, the force Q can be placed equal to zero prior to integration. The deflection equation can then be expressed as

$$y = \frac{wr^4}{2}\left(\frac{A}{EI} + \frac{B}{GK}\right) \tag{38.8}$$

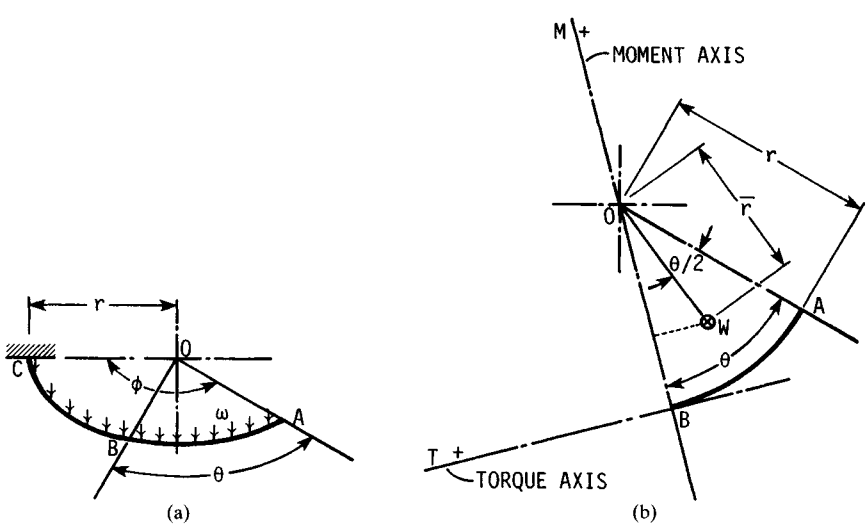

FIGURE 38.2 (*a*) Ring segment of span angle ϕ loaded by a uniformly distributed load w acting normal to the plane of the ring segment; (*b*) view of portion of ring AB; force W is the resultant of the distributed load w acting on portion AB of ring, and it acts at the centroid.

38.4 RINGS WITH SIMPLE SUPPORTS

Consider a ring loaded by any set of forces F and supported by reactions R, all normal to the ring plane, such that the force system is statically determinate. The system shown in Fig. 38.3, consisting of five forces and three reactions, is statically determinate and is such a system. By choosing an origin at any point A on the ring, all forces and reactions can be located by the angles ϕ measured counterclockwise from A. By treating the reactions as negative forces, Den Hartog [38.3], pp. 319–323, describes a simple method of determining the shear force, the bending moment, and the torsional moment at any point on the ring. The method is called *Biezeno's theorem.*

A term called the *reduced load P* is defined for this method. The reduced load is obtained by multiplying the actual load, plus or minus, by the fraction of the circle corresponding to its location from A. Thus for a force F_i, the reduced load is

$$P_i = \frac{\phi_i}{360°} F_i \tag{38.9}$$

Then Biezeno's theorem states that the shear force V_A, the moment M_A, and the torque T_A at section A, all statically indeterminate, are found from the set of equations

$$\begin{aligned} V_A &= \sum_n P_i \\ M_A &= \sum_n P_i r \sin \phi_i \\ T_A &= \sum_n P_i r(1 - \cos \phi_i) \end{aligned} \tag{38.10}$$

where n = number of forces and reactions together. The proof uses Castigliano's theorem and may be found in Ref. [38.3].

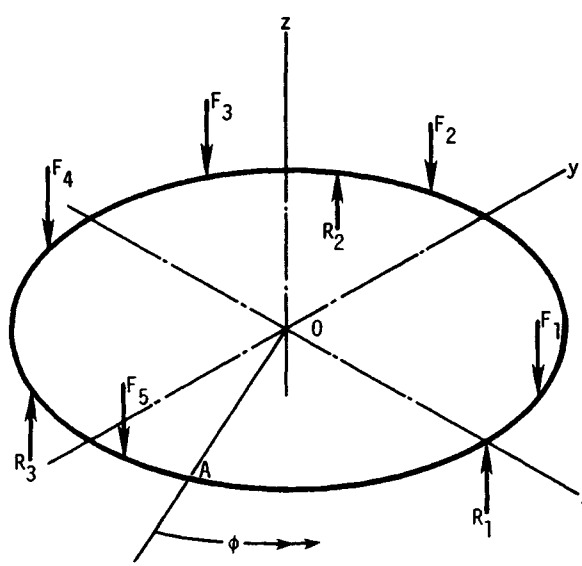

FIGURE 38.3 Ring loaded by a series of concentrated forces.

Example 1. Find the shear force, bending moment, and torsional moment at the location of R_3 for the ring shown in Fig. 38.4.

Solution. Using the principles of statics, we first find the reactions to be

$$R_1 = R_2 = R_3 = \frac{2}{3} F$$

Choosing point A at R_3, the reduced loads are

$$P_0 = -\frac{0°}{360°} R_3 = 0 \qquad P_1 = \frac{30}{360} F = 0.0833F$$

$$P_2 = -\frac{120}{360} R_1 = -\frac{120}{360}\frac{2}{3} F = -0.2222F$$

$$P_3 = \frac{210}{360} F = 0.5833F$$

$$P_4 = -\frac{240}{360} R_2 = -\frac{240}{360}\frac{2}{3} F = -0.4444F$$

Then, using Eqs. (38.10), we find $V_A = 0$. Next,

$$\begin{aligned} M_A &= \sum_5 P_i r \sin \phi_i \\ &= Fr\,(0 + 0.0833 \sin 30° - 0.2222 \sin 120° + 0.5833 \sin 210° \\ &\quad - 0.4444 \sin 240°) \\ &= -0.0576Fr \end{aligned}$$

In a similar manner, we find $T_A = 0.997Fr$.

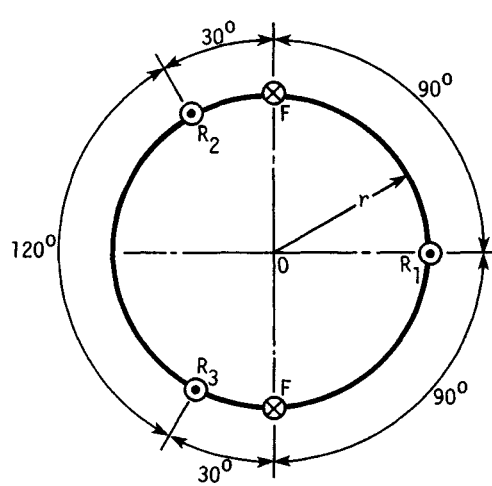

FIGURE 38.4 Ring loaded by the two forces F and supported by reactions R_1, R_2, and R_3. The crosses indicate that the forces act downward; the heavy dots at the reactions R indicate an upward direction.

The task of finding the deflection at any point on a ring with a loading like that of Fig. 38.3 is indeed difficult. The problem can be set up using Eq. (38.2), but the resulting integrals will be lengthy. The chances of making an error in signs or in terms during any of the simplification processes are very great. If a computer or even a programmable calculator is available, the integration can be performed using a numerical procedure such as Simpson's rule. Most of the user's manuals for programmable calculators contain such programs in the master library. When this approach is taken, the two terms behind each integral should not be multiplied out or simplified; reserve these tasks for the computer.

38.4.1 A Ring with Symmetrical Loads

A ring having three equally spaced loads, all equal in magnitude, with three equally spaced supports located midway between each pair of loads, has reactions at each support of $R = F/2$, $M = 0.289Fr$, and $T = 0$ by Biezeno's theorem. To find the moment and torque at any location θ from a reaction, we construct the diagram shown in Fig. 38.5. Then the moment and torque at A are

$$\begin{aligned} M &= M_1 \cos\theta - R_1 r \sin\theta \\ &= Fr\,(0.289\cos\theta - 0.5\sin\theta) \end{aligned} \tag{38.11}$$

$$\begin{aligned} T &= M_1 \sin\theta - R_1 r\,(1 - \cos\theta) \\ &= Fr\,(0.289\sin\theta - 0.5 + 0.5\cos\theta) \end{aligned} \tag{38.12}$$

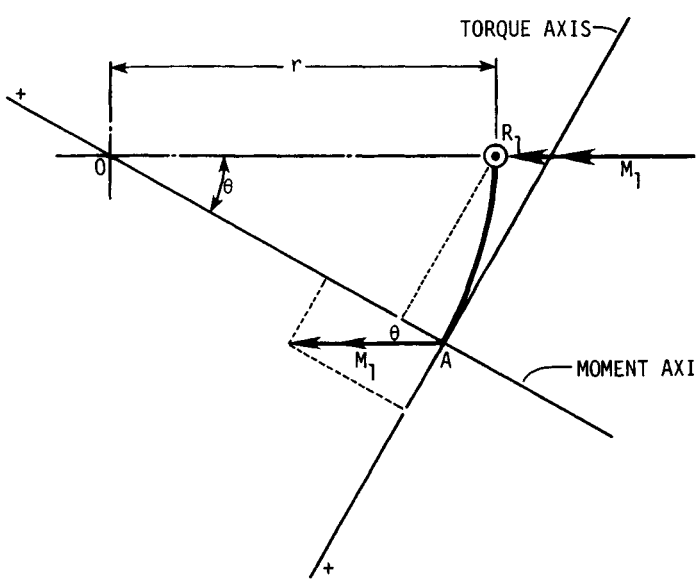

FIGURE 38.5 The positive directions of the moment and torque axes are arbitrary. Note that $R_1 = F/2$ and $M_1 = 0.289Fr$.

Neglecting direct shear, the strain energy stored in the ring between any two supports is, from Table 38.2,

$$U = 2\int_0^{\pi/3} \frac{M^2 r\, d\theta}{2EI} + 2\int_0^{\pi/3} \frac{T^2 r\, d\theta}{2GK} \tag{38.13}$$

Castigliano's theorem states that the deflection at the load F is

$$y = \frac{\partial U}{\partial F} = \frac{2r}{EI}\int_0^{\pi/3} M\frac{\partial M}{\partial F}\, d\theta + \frac{2r}{GK}\int_0^{\pi/3} T\frac{\partial T}{\partial F}\, d\theta \tag{38.14}$$

From Eqs. (38.11) and (38.12), we find

$$\frac{\partial M}{\partial F} = r(0.289\cos\theta - 0.5\sin\theta)$$

$$\frac{\partial T}{\partial F} = r(0.289\sin\theta - 0.5 + 0.5\cos\theta)$$

When these are substituted into Eq. (38.14), we get

$$y = \frac{Fr^3}{2}\left(\frac{A}{EI} + \frac{B}{GK}\right) \tag{38.15}$$

which is the same as Eq. (38.5). The constants are

$$\begin{aligned} A &= 4\int_0^{\pi/3} (0.289\cos\theta - 0.5\sin\theta)^2\, d\theta \\ B &= 4\int_0^{\pi/3} (0.289\sin\theta - 0.5 + 0.5\cos\theta)^2\, d\theta \end{aligned} \tag{38.16}$$

These equations can be integrated directly or by a computer using Simpson's rule. If your integration is rusty, use the computer. The results are $A = 0.1208$ and $B = 0.0134$.

38.4.2 Distributed Loading

The ring segment in Fig. 38.6 is subjected to a distributed load w per unit circumference and is supported by the vertical reactions R_1 and R_2 and the moment reactions M_1 and M_2. The zero-torque reactions mean that the ring is free to turn at A and B. The resultant of the distributed load is $W = wr\phi$; it acts at the centroid:

$$\bar{r} = \frac{2r\sin(\phi/2)}{\phi} \tag{38.17}$$

By symmetry, the force reactions are $R_1 = R_2 = W/2 = wr\phi/2$. Summing moments about an axis through BO gives

$$\Sigma M(BO) = -M_2 + W\bar{r}\sin\frac{\phi}{2} - M_1\cos(\pi - \phi) - \frac{wr^2\phi}{2}\sin\phi = 0$$

Since M_1 and M_2 are equal, this equation can be solved to give

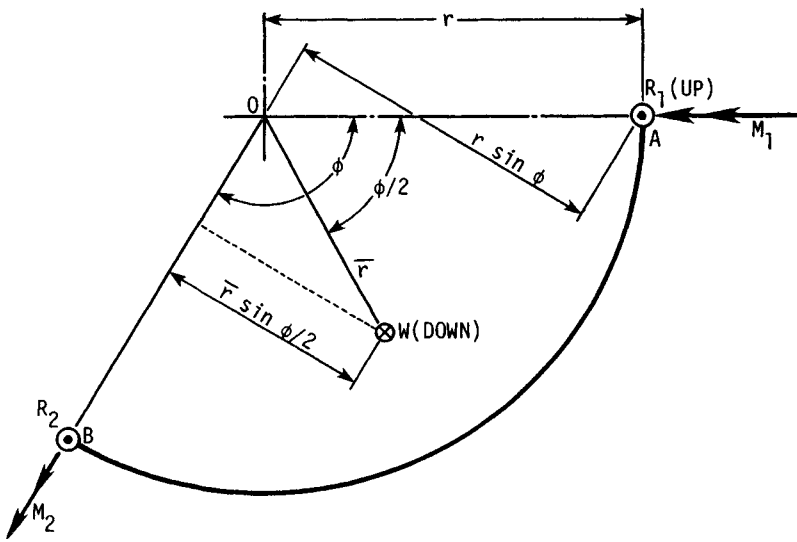

FIGURE 38.6 Section of ring of span angle ϕ with distributed load.

$$M_1 = wr^2 \left[\frac{1 - \cos\phi - (\phi/2)\sin\phi}{1 - \cos\phi} \right] \tag{38.18}$$

Example 2. A ring has a uniformly distributed load and is supported by three equally spaced reactions. Find the deflection midway between supports.

Solution. If we place a load Q midway between supports and compute the strain energy using half the span, Eq. (38.7) becomes

$$y = \frac{\partial U}{\partial Q} = \frac{2r}{EI}\int_0^{\phi/2} M\frac{\partial M}{\partial Q}\,d\theta + \frac{2r}{GK}\int_0^{\phi/2} T\frac{\partial T}{\partial Q}\,d\theta \tag{38.19}$$

Using Eq. (38.18) with $\phi = 2\pi/3$ gives the moment at a support due only to w to be $M_1 = 0.395\ wr^2$. Then, using a procedure quite similar to that used to write Eqs. (38.11) and (38.12), we find the moment and torque due only to the distributed load at any section θ to be

$$\begin{aligned} M_w &= wr^2\left(1 - 0.605\cos\theta - \frac{\pi}{3}\sin\theta\right) \\ T_w &= wr^2\left(\theta - 0.605\sin\theta - \frac{\pi}{3} + \frac{\pi}{3}\cos\theta\right) \end{aligned} \tag{38.20}$$

In a similar manner, the force Q results in additional components of

$$\begin{aligned} M_Q &= \frac{Qr}{2}(0.866\cos\theta - \sin\theta) \\ T_Q &= \frac{Qr}{2}(0.866\sin\theta - 1 + \cos\theta) \end{aligned} \tag{38.21}$$

Then
$$\frac{\partial M_Q}{\partial Q} = \frac{r}{2}(0.866\cos\theta - \sin\theta)$$
$$\frac{\partial T_Q}{\partial Q} = \frac{r}{2}(0.866\sin\theta - 1 + \cos\theta)$$

And so, placing the fictitious force Q equal to zero, Eq. (38.19) becomes

$$y = \frac{wr^4}{EI}\int_0^{\pi/3}\left(1 - 0.605\cos\theta - \frac{\pi}{3}\sin\theta\right)(0.866\cos\theta - \sin\theta)\,d\theta$$
$$+\frac{wr^4}{GK}\int_0^{\pi/3}\left(\theta - 0.605\sin\theta - \frac{\pi}{3} + \frac{\pi}{3}\cos\theta\right)(0.866\sin\theta - 1 + \cos\theta)\,d\theta \qquad (38.22)$$

When this expression is integrated, we find

$$y = \frac{wr^4}{2}\left(\frac{0.141}{EI} + \frac{0.029}{GK}\right) \qquad (38.23)$$

38.5 RING SEGMENTS WITH FIXED ENDS

A ring segment with fixed ends has a moment reaction M_1, a torque reaction T_1, and a shear reaction R_1, as shown in Fig. 38.7*a*. The system is indeterminate, and so all three relations of Eq. (38.2) must be used to determine them, using zero for each corresponding displacement.

38.5.1 Segment with Concentrated Load

The moment and torque at any position θ are found from Fig. 38.7*b* as

$$M = T_1\sin\theta + M_1\cos\theta - R_1 r\sin\theta + Fr\sin(\theta - \gamma)$$
$$T = -T_1\cos\theta + M_1\sin\theta - R_1 r(1 - \cos\theta) + Fr[1 - \cos(\theta - \gamma)]$$

These can be simplified; the result is

$$M = T_1\sin\theta + M_1\cos\theta - R_1 r\sin\theta + Fr\cos\gamma\sin\theta - Fr\sin\gamma\cos\theta \qquad (38.24)$$
$$T = -T_1\cos\theta + M_1\sin\theta - R_1 r(1 - \cos\theta)$$
$$-Fr\cos\gamma\cos\theta - Fr\sin\gamma\sin\theta + Fr \qquad (38.25)$$

Using Eq. (38.3) and the third relation of Eq. (38.2) gives

$$\frac{\partial U}{\partial M_1} = \frac{r}{EI}\int_0^{\phi} M\frac{\partial M}{\partial M_1}\,d\theta + \frac{r}{GK}\int_0^{\phi} T\frac{\partial T}{\partial M_1}\,d\theta = 0 \qquad (38.26)$$

Note that
$$\frac{\partial M}{\partial M_1} = \cos\theta$$
$$\frac{\partial T}{\partial M_1} = \sin\theta$$

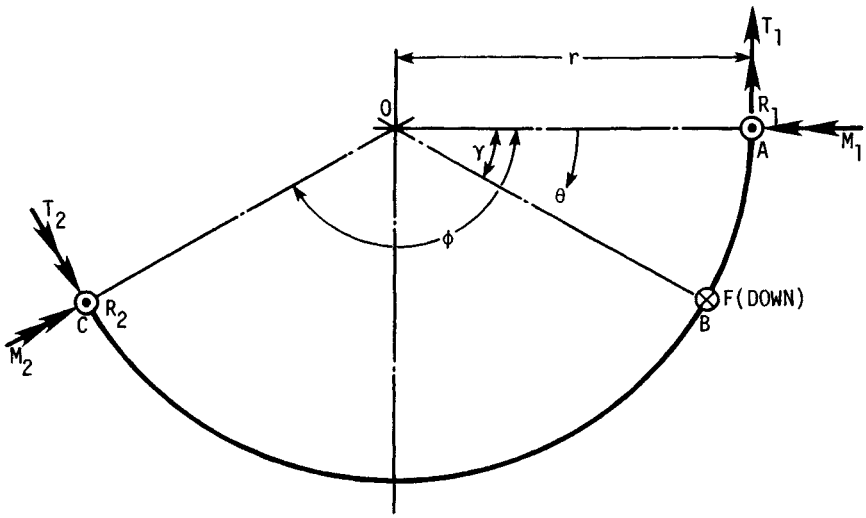

(a)

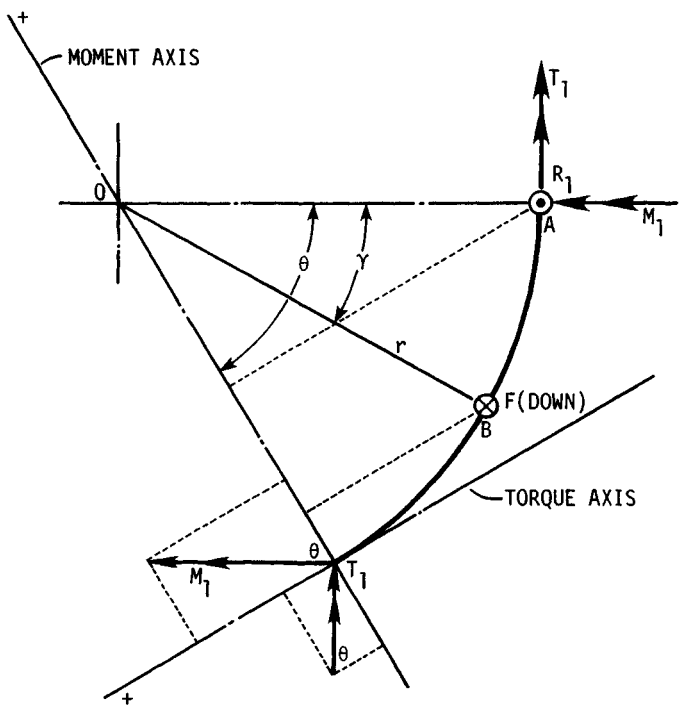

(b)

FIGURE 38.7 (*a*) Ring segment of span angle ϕ loaded by force F. (*b*) Portion of ring used to compute moment and torque at position θ.

Now multiply Eq. (38.26) by EI and divide by r; then substitute. The result can be written in the form

$$\int_0^{\phi} (T_1 \sin\theta + M_1 \cos\theta - R_1 r \sin\theta) \cos\theta \, d\theta$$

$$+ Fr \int_{\gamma}^{\phi} (\cos\gamma \sin\theta - \sin\gamma \cos\theta) \cos\theta \, d\theta$$

$$+ \frac{EI}{GK} \left\{ \int_0^{\phi} [-T_1 \cos\theta + M_1 \sin\theta - R_1 r(1 - \cos\theta)] \sin\theta \, d\theta \right.$$

$$\left. - Fr \int_{\gamma}^{\phi} (\cos\gamma \cos\theta + \sin\gamma \sin\theta - 1) \sin\theta \, d\theta \right\} = 0 \qquad (38.27)$$

Similar equations can be written using the other two relations in Eq. (38.2). When these three relations are integrated, the results can be expressed in the form

$$\begin{bmatrix} a_{11} & a_{12} & a_{13} \end{bmatrix} \begin{bmatrix} T_1/Fr \end{bmatrix} \begin{bmatrix} b_1 \end{bmatrix}$$

TABLE 38.5 Coefficients b_k for Various Span Angles ϕ and Load Angles γ in Terms of ϕ

Coefficients, load angles γ			Span angle ϕ						
			$3\pi/2$	π	$3\pi/4$	$2\pi/3$	$\pi/2$	$\pi/3$	$\pi/4$
$\frac{\phi}{4}$	b_1	X_1	2.8826	1.6661	0.2883	−0.0806	−0.4730	−0.4091	−0.2780
		Y_1	2.8826	−1.7481	−1.4019	1.0806	−0.4730	−0.1162	−0.0396
	b_2	X_2	−1.3525	−2.3732	−2.1628	−1.8603	−1.0884	−0.4051	−0.1849
		Y_2	−5.2003	−2.3732	−0.4727	−0.1283	0.1462	0.1022	0.0535
	b_3	X_3	−1.3525	−2.3732	−2.1628	−1.8603	−1.0884	−0.4051	−0.1849
		Y_3	−13.0342	−5.6714	−2.0455	−1.2699	−0.3622	−0.0544	−0.0135
$\frac{\phi}{3}$	b_1	X_1	3.1416	1.8138	0.4036	0.0446	−0.3424	−0.3179	−0.2180
		Y_1	3.1416	−1.1862	−1.0106	−0.7817	−0.3424	−0.0839	−0.0286
	b_2	X_2	0	−1.9132	−1.8178	−1.5620	−0.9069	−0.3346	−0.1522
		Y_2	−4	−1.9132	−0.4036	−0.1307	0.0931	0.0706	0.0373
	b_3	X_3	0	−1.9132	−1.8178	−1.5620	−0.9069	−0.3346	−0.1522
		Y_3	−10.2832	−4.3700	−1.5452	−0.9536	−0.2692	−0.0401	−0.0099
$\frac{\phi}{2}$	b_1	X_1	2.3732	1.5708	0.4351	0.1569	−0.1517	−0.1712	−0.1203
		Y_1	2.3732	−0.4292	−0.4379	−0.3431	−0.1517	−0.0372	−0.0127
	b_2	X_2	1.6661	−1	−1.1041	−0.9566	−0.5554	−0.2034	−0.0922
		Y_2	−1.7481	−1	−0.2311	−0.0906	0.0304	0.0286	0.0154
	b_3	X_3	1.6661	−1	−1.1041	−0.9566	−0.5554	−0.2034	−0.0922
		Y_3	−5.0463	−2.1416	−0.7395	−0.4529	−0.1262	−0.0186	−0.0046

38.5.2 Deflection Due to Concentrated Load

The deflection of a ring segment at a concentrated load can be obtained using the first relation of Eq. (38.2). The complete analytical solution is quite lengthy, and so a result is shown here that can be solved using computer solutions of Simpson's approximation. First, define the three solutions to Eq. (38.28) as

$$T_1 = C_1 Fr \qquad M_1 = C_2 Fr \qquad R_1 = C_3 F \tag{38.42}$$

Then Eq. (38.2) will have four integrals, which are

$$A_F = \int_0^{\phi} [(C_1 - C_3)\sin\theta + C_2\cos\theta]^2\, d\theta \tag{38.43}$$

$$B_F = \int_0^{\phi} (\cos\gamma\sin\theta - \sin\gamma\cos\theta)^2\, d\theta \tag{38.44}$$

$$C_F = \int_0^{\phi} [(C_3 - C_1)\cos\theta + C_2\sin\theta - C_3]^2\, d\theta \tag{38.45}$$

$$D_F = \int_0^{\phi} [1 - (\cos\gamma\cos\theta + \sin\gamma\sin\theta)]^2 \, d\theta \tag{38.46}$$

The results of these four integrations should be substituted into

$$y = \frac{Fr^3}{EI}\left[A_F + B_F + \frac{EI}{GK}(C_F + D_F)\right] \tag{38.47}$$

to obtain the deflection due to F and at the location of the force F.

It is worth noting that the point of maximum deflection will never be far from the middle of the ring, even though the force F may be exerted near one end. This means that Eq. (38.47) will not give the maximum deflection unless $\gamma = \phi/2$.

38.5.3 Segment with Distributed Load

The resultant load acting at the centroid B' in Fig. 38.8 is $W = wr\phi$, and the radius $\bar{r}$ is given by Eq. (38.6), with ϕ substituted for θ. Thus the shear reaction at the fixed end A is $R_1 = wr\phi/2$. M_1 and T_1, at the fixed ends, can be determined using Castigliano's method.

We use Fig. 38.9 to write equations for moment and torque for any section, such as the one at D. When Eq. (38.6) for $\bar{r}$ is used, the results are found to be

$$M = T_1 \sin\theta + M_1 \cos\theta - \frac{wr^2\phi}{2}\sin\theta + wr^2(1 - \cos\theta) \tag{38.48}$$

$$T = -T_1 \cos\theta + M_1 \sin\theta - \frac{wr^2\phi}{2}(1 - \cos\theta) + wr^2(\theta - \sin\theta) \tag{38.49}$$

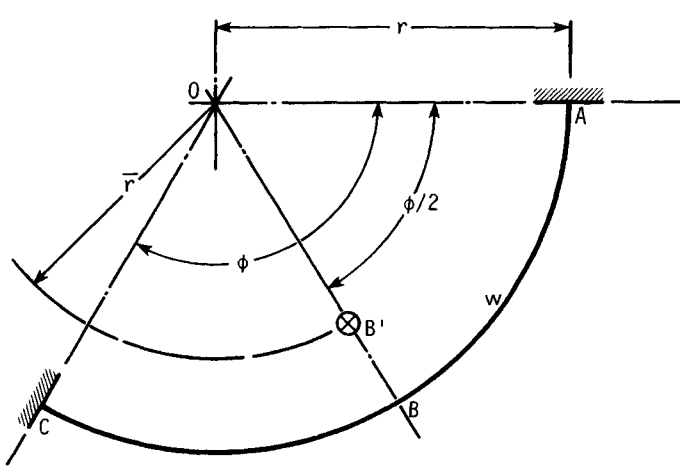

FIGURE 38.8 Ring segment of span angle ϕ subjected to a uniformly distributed load w per unit circumference acting downward. Point B' is the centroid of the load. The ends are fixed to resist bending moment and torsional moment.

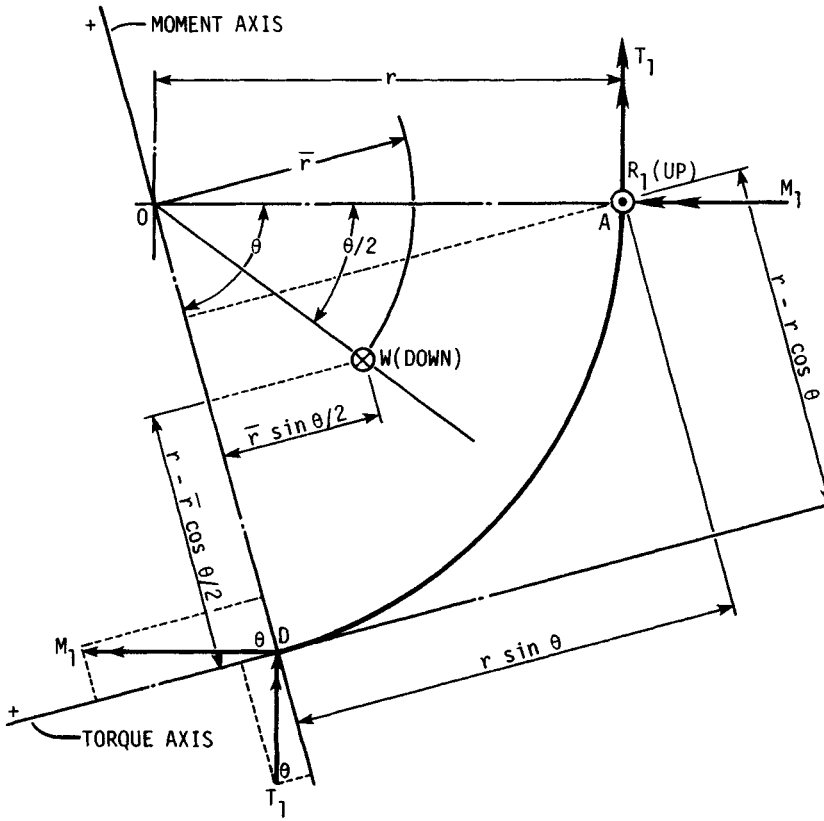

FIGURE 38.9 A portion of the ring has been isolated here to determine the moment and torque at any section D at angle θ from the fixed end at A.

These equations are now employed in the same manner as in Sec. 38.5.1 to obtain

$$\begin{bmatrix} a_{11} & a_{12} \\ a_{21} & a_{22} \end{bmatrix} \begin{bmatrix} T_1/wr^2 \\ M_1/wr^2 \end{bmatrix} = \begin{bmatrix} b_1 \\ b^2 \end{bmatrix} \tag{38.50}$$

It turns out that the a_{ij} terms in the array are identical with the same coefficients in Eq. (38.28); they are given by Eqs. (38.29), (38.30), (38.32), and (38.33), respectively. The coefficients b_k are

$$b_k = X_k + \frac{EI}{GK} Y_k \tag{38.51}$$

where

$$X_1 = \frac{\phi}{2} \sin^2 \phi + \sin \phi \cos \phi + \phi - 2 \sin \phi \tag{38.52}$$

$$Y_1 = \phi - 2 \sin \phi - \frac{\phi}{2} \sin^2 \phi - \sin \phi \cos \phi + \phi(1 + \cos \phi) \tag{38.53}$$

TABLE 38.6 Coefficients b_k for Various Span Angles and Uniform Loading

Coefficients		Span angle ϕ						
		$3\pi/2$	π	$3\pi/4$	$2\pi/3$	$\pi/2$	$\pi/3$	$\pi/4$
b_1	X_1	9.0686	3.1416	1.0310	0.7147	0.3562	0.1409	0.0675
	Y_1	9.0686	3.1416	1.5430	1.0572	0.3562	0.0602	0.0156
b_2	X_2	10.1033	0.9348	0.4507	0.3967	0.2337	0.0716	0.0263
	Y_2	8.1033	0.9348	−1.7274	−2.0102	−1.7663	−0.9750	−0.5810

$$X_2 = \frac{\phi^2}{2} - 2(1 - \cos\phi) - \frac{\phi}{2}\sin\phi\cos\phi + \sin^2\phi \tag{38.54}$$

$$Y_2 = \frac{\phi^2}{2} - 2(1 - \cos\phi) + \frac{\phi}{2}\sin\phi\cos\phi - \sin^2\phi + \phi\sin\phi \tag{38.55}$$

Solutions to these equations for a variety of span angles are given in Table 38.6.

A solution for the deflection at any point can be obtained using a fictitious load Q at any point and proceeding in a manner similar to other developments in this chapter. It is, however, a very lengthy analysis.

REFERENCES

38.1 Raymond J. Roark and Warren C. Young, *Formulas for Stress and Strain,* 6th ed., McGraw-Hill, New York, 1984.

38.2 Joseph E. Shigley and Charles R. Mischke, *Mechanical Engineering Design,* 5th ed., McGraw-Hill, New York, 1989.

38.3 J. P. Den Hartog, *Advanced Strength of Materials,* McGraw-Hill, New York, 1952.