Designation: D1822 – 13

Standard Test Method for Tensile-Impact Energy to Break Plastics and Electrical Insulating Materials[1]

This standard is issued under the fixed designation D1822; the number immediately following the designation indicates the year of original adoption or, in the case of revision, the year of last revision. A number in parentheses indicates the year of last reapproval. A superscript epsilon (ε) indicates an editorial change since the last revision or reapproval.

1. Scope*

1.1 This test method covers the determination of the energy required to rupture standard tension-impact specimens of plastic or electrical insulating materials. Rigid materials are suitable for testing by this method as well as specimens that are too flexible or thin to be tested in accordance with other impact test methods.

1.2 The values stated in SI units are to be regarded as standard. The values given in parentheses are for information only.

NOTE 1—This test method and ISO 8256 address the same subject matter, but differ in technical content.

1.3 *This standard does not purport to address all of the safety problems, if any, associated with its use. It is the responsibility of the user of this standard to establish appropriate safety and health practices and determine the applicability of regulatory limitations prior to use.*

2. Referenced Documents

2.1 *ASTM Standards:*[2]

D256 Test Methods for Determining the Izod Pendulum Impact Resistance of Plastics

D618 Practice for Conditioning Plastics for Testing

D638 Test Method for Tensile Properties of Plastics

D883 Terminology Relating to Plastics

D4000 Classification System for Specifying Plastic Materials

D5947 Test Methods for Physical Dimensions of Solid Plastics Specimens

E177 Practice for Use of the Terms Precision and Bias in ASTM Test Methods

2.2 *ISO Standards:*

ISO 8256 Plastics—Determination of Tensile-Impact Strength

3. Terminology

3.1 *Definitions*—Definitions of terms applying to this test method appear in Terminology D883.

4. Summary of Test Method

4.1 The energy utilized in this test method is delivered by a single swing of a calibrated pendulum of a standardized tension-impact machine. The energy to fracture a specimen, by shock in tension, is determined by the kinetic energy extracted from the pendulum of the impact machine in the process of breaking the specimen. One end of the specimen is mounted in the pendulum. The other end of the specimen is gripped by a crosshead which travels with the pendulum until the instant of impact (and instant of maximum pendulum kinetic energy), when the crosshead is arrested.

5. Significance and Use

5.1 Tensile-impact energy is the energy required to break a standard tension-impact specimen in tension by a single swing of a standard calibrated pendulum under a set of standard conditions (see Note 2). To compensate for the minor differences in cross-sectional area of the specimens, the energy to break is normalized to units of kilojoules per square metre (or foot-pounds-force per square inch) of minimum cross-sectional area. An alternative approach to normalizing the impact energy that compensates for these minor differences and still retains the test unit as joules (foot-pounds) is shown in Section 10. For a perfectly elastic material, the impact energy is usually reported per unit volume of material undergoing deformation. However, since much of the energy to break the plastic materials for which this test method is written is dissipated in drawing of only a portion of the test region, such normalization on a volume basis is not feasible. In order to observe the effect of elongation or rate of extension, or both, upon the result, the test method permits two specimen geometries. Results obtained with different capacity machines generally are not comparable.

5.1.1 With the Type S (short) specimen the extension is comparatively low, while with the Type L (long) specimen the

[1] This test method is under the jurisdiction of ASTM Committee D20 on Plastics and is the direct responsibility of Subcommittee D20.10 on Mechanical Properties.

Current edition approved Sept. 1, 2013. Published November 2013. Originally approved in 1961. Last previous edition approved in 2006 as D1822 - 06. DOI:10.1520/D1822–13.

[2] For referenced ASTM standards, visit the ASTM website, www.astm.org, or contact ASTM Customer Service at service@astm.org. For *Annual Book of ASTM Standards* volume information, refer to the standard's Document Summary page on the ASTM website. DOI: 10.1520/D1822-06.

***A Summary of Changes section appears at the end of this standard**

Copyright © ASTM International, 100 Barr Harbor Drive, PO Box C700, West Conshohocken, PA 19428-2959. United States

Copyright by ASTM Int'l (all rights reserved); Wed Aug 27 02:43:21 EDT 2014
Downloaded/printed by
UNIVERSITY TEKNOLOGI MALAYSIA pursuant to License Agreement. No further reproductions authorized.

extension is comparatively high. In general, the Type S specimen (with its greater occurrence of brittle fracture) gives greater reproducibility, but less differentiation among materials.

NOTE 2—Friction losses are largely eliminated by careful design and proper operation of the testing machine.

5.2 Scatter of data is sometimes attributed to different failure mechanisms within a group of specimens. Some materials exhibit a transition between different failure mechanisms. If so, the elongation will be critically dependent on the rate of extension encountered in the test. The impact energy values for a group of such specimens will have an abnormally large dispersion.

5.2.1 Some materials retract at failure with insignificant permanent set. With such materials, determining the type of failure, ductile or brittle, by examining the broken pieces is difficult, if not impossible. It is helpful to sort a set of specimens into two groups by observing the broken pieces to ascertain whether or not there was necking during the test. Qualitatively, the strain rates encountered here are intermediate between the high rate of the Izod test of Test Methods D256 and the low rate of usual tension testing in accordance with Test Method D638.

5.3 The energy for fracture is a function of the force times the distance through which the force operates. Therefore, given the same specimen geometry, it is possible that one material will produce tensile-impact energies for fracture due to a large force associated with a small elongation, and another material will produce the same energy for fracture result due to a small force associated with a large elongation. It shall not be assumed that this test method will correlate with other tests or end uses unless such a correlation has been established by experiment.

5.4 Comparisons among specimens from different sources are to be made with confidence only to the extent that specimen preparation, for example, molding history, has been precisely duplicated. Comparisons between molded and machined specimens must not be made without first establishing quantitatively the differences inherent between the two methods of preparation.

5.5 Only results from specimens of nominally equal thickness and tab width shall be compared unless it has been shown that the tensile-impact energy normalized to kilojoules per square metre (or foot-pounds-force per square inch) of cross-sectional area is independent of the thickness over the range of thicknesses under consideration.

5.6 The bounce of the crosshead supplies part of the energy to fracture test specimen (see Appendix X1).

5.7 For many materials, there are specifications that require the use of this test method, but with some procedural modifications that take precedence when adhering to the specification. Therefore, it is advisable to refer to that material specification before using this test method. Table 1 of Classification System D4000 lists the ASTM materials standards that currently exist.

6. Apparatus

6.1 The machine shall be of the pendulum type shown schematically in Fig. 1 and Fig. 2. The base and suspending frame shall be of sufficiently rigid and massive construction to prevent or minimize energy losses to or through the base and frame. The position of the pendulum holding and releasing mechanism shall be such that the vertical height of fall of the striker shall be 610 ± 2 mm (24.0 ± 0.1 in.). This will produce a velocity of the striker at the moment of impact of approximately 3.5 m (11.4 ft)/second. The mechanism shall be so constructed and operated that it will release the pendulum without imparting additional acceleration or vibration.

6.2 The pendulum shall be constructed of a single- or multiple-membered arm holding the head, in which the greatest mass is concentrated. A rigid pendulum is essential to maintain the proper clearances and geometric relationships between related parts and to minimize energy losses, which always are included in the measured impact energy value. It is imperative that the center of percussion of the pendulum system and the point of impact are within ±2.54 mm (±0.100 in.) of each other and that the point of contact occurs in the neutral (free hanging) position of the pendulum within 2.54 mm (0.100 in.), both with and without the crosshead in place.

NOTE 3—The distance from the axis of support to the center of percussion is determined experimentally from the period of small amplitude oscillations of the pendulum by means of the following equation:

$$L = (g/4\pi^2)\,p^2 \quad (1)$$

where:

L = distance from the axis of support to the center of percussion, mm (ft),
g = local gravitational acceleration (known to an accuracy of one part in one thousand), in mm/s^2 (ft/s^2),
π = 3.14159, and
p = period, s, of a single complete swing (to and fro) determined from at least 50 consecutive and uninterrupted swings (known to one part in two thousand). The angle of swing shall be less than 0.09 radians (5°) each side of the center.

6.3 The positions of the rigid pendulum and crosshead clamps on the specimen are shown in Fig. 2. The crosshead is designed to be rigid and light in weight. The crosshead shall be supported by the pendulum so that the test region of the specimen is not under stress until the moment of impact, when the specimen shall be subjected to a pure tensile force. The clamps shall have file-like serrated jaws to prevent the specimen from slipping. The edge of the serrated jaws shall have a 0.40-mm (1/64-in.) radius to break the edge of the first serrations. The size of serrations will vary and shall be selected according to experience with hard and tough materials, and with the thickness of the specimen.

6.4 Means shall be provided for determining the energy expended by the pendulum in breaking the specimen. This is accomplished using either a pointer and dial mechanism or an electronic system consisting of a digital indicator and sensor (typically an encoder or resolver).

6.5 The indicated breaking energy is determined by detecting the height of rise of the pendulum beyond the point of impact in terms of energy removed from that specific pendulum.

Copyright by ASTM Int'l (all rights reserved); Wed Aug 27 02:43:21 EDT 2014
Downloaded/printed by
UNIVERSITY TEKNOLOGI MALAYSIA pursuant to License Agreement. No further reproductions authorized.

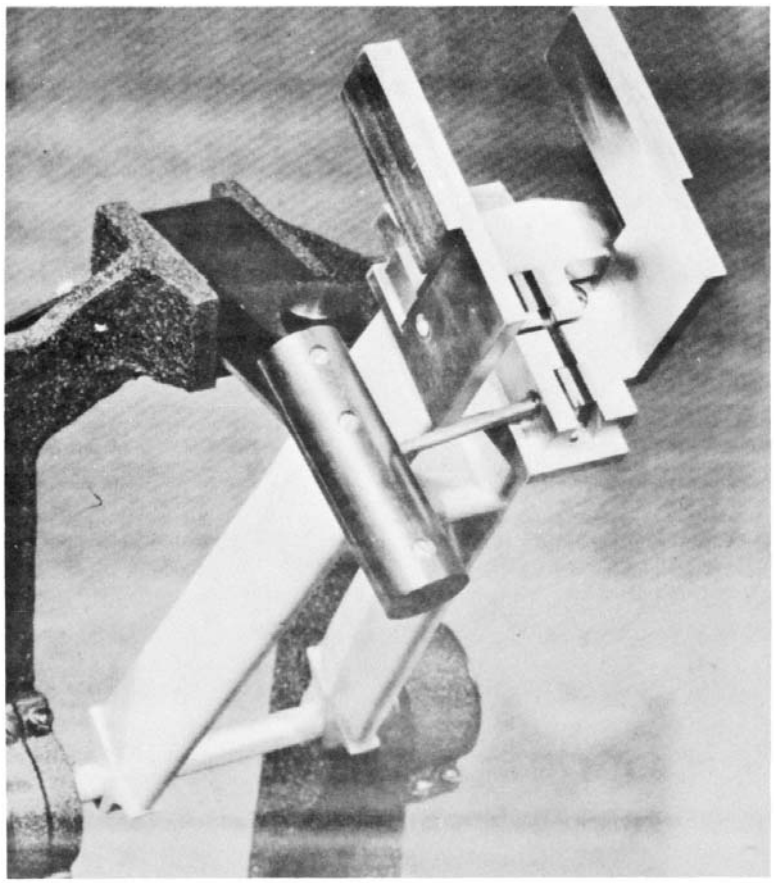

FIG. 1 Specimen-in-Head Tension-Impact Machine

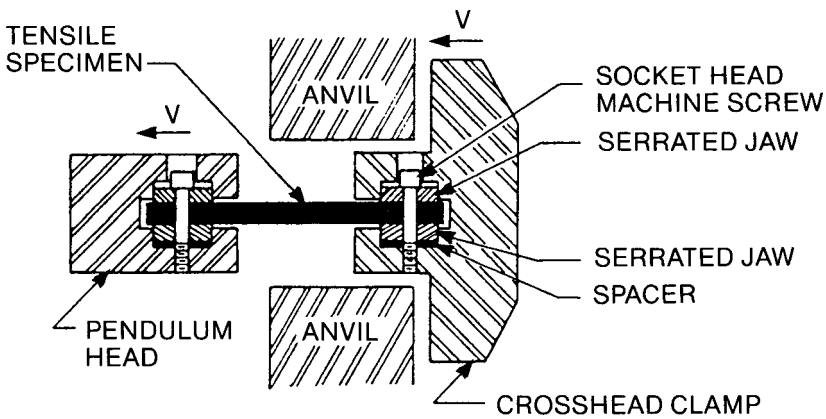

FIG. 2 Specimen-in-Head Tension-Impact Machine (Schematic)

6.5.1 Since the indicated energy must be corrected for pendulum-bearing friction, pointer friction, pointer inertia, and pendulum windage, instructions for making these corrections are found in Annexes A1 and A2 of Test Method D256. If the electronic display does not automatically correct for windage and friction, it shall be incumbent for the operator to determine the energy loss manually. (See Note 4.)

NOTE 4—Many digital indicating systems automatically correct for windage and friction. The equipment manufacturer may be consulted for details concerning how this is performed, or if it is necessary to determine the means for manually calculating the energy loss due to windage and friction.

6.5.2 Bounce correction is explained in Appendix X1. Some electronic displays permit the user to enter an energy correction offset so that the bounce correction is factored in before the breaking energy is displayed.

6.6 The procedures for the setup and calibration of tension-impact machines are described in Appendix X2.

Copyright by ASTM Int'l (all rights reserved); Wed Aug 27 02:43:21 EDT 2014
Downloaded/printed by
UNIVERSITY TEKNOLOGI MALAYSIA pursuant to License Agreement. No further reproductions authorized.

6.7 *Micrometers*—Apparatus for measuring the width and thickness of the test specimen shall comply with the requirements of Test Method D5947.

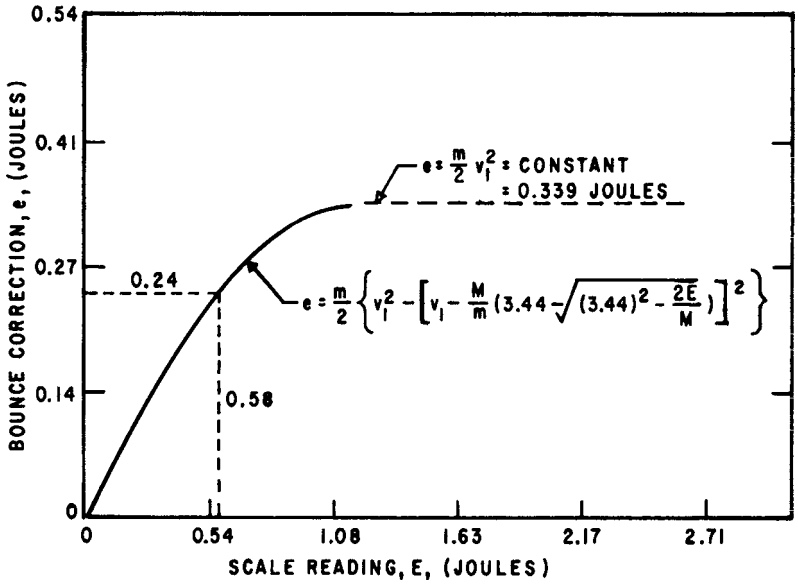

FIG. 5 Typical Correction Factor Curve for Single Bounce of Crosshead for Specimen-in-Head Tension-Impact Machine, 6.8-J Hammer, 0.428-lb Steel Crosshead (see Appendix X1)

Case A— *Low-Energy Specimen:*	
Scale reading of energy to break	0.58 J (0.43 ft·lbf)
Friction and windage correction	
−0.03 J (−0.02 ft·lbf)	
Bounce correction factor, e (from Fig. 5 in Appendix X1)	+0.22 J (0.16 ft·lbf)
+0.25 J (+0.18 ft·lbf)	
= +0.22 (+0.16 ft·lbf)	
Corrected impact energy to break	0.80 J (0.59 ft·lbf)
Case B—*High-Energy Specimen*:	
Scale reading of energy to break	2.33 J (1.72 ft·lbf)
Friction and windage correction	
−0.01 J (−0.01 ft·lbf)	+0.33 J (0.24 ft·lbf)
Bounce correction factor. e (from Fig. 5 in Appendix X1)	
Corrected impact energy to break	2.66 J (1.96 ft·lbf)

NOTE 9—Corrections for a slight variation in specimen dimensions due to specimen preparation or mold shrinkage are made, if desired, by using the following equation:

$$X = \frac{E - Y + e}{\left(\frac{w}{a}\right)\left(\frac{t}{a}\right)} \tag{3}$$

where:

*X, E, Y,*and e are as described in 9.1,

a = 3.2 mm (0.125 in.),
w = specimen width, mm (in.), and
t = specimen thickness, mm (in.).

This would normalize the value of tensile impact energy to a standard specimen whose cross section is 3.2 mm (0.125 in.) by 3.2 mm (0.125 in.).

10.2 Calculate the standard deviation (estimated) as follows and report to two significant figures:

$$s = \sqrt{\sum X^2 - n\bar{X}^2/n - 1} \tag{4}$$

where:

s = estimated standard deviation,
X = value of single observation,
n = number of observations, and
$\bar{X}$ = arithmetic mean of the set of observations.

11. Report

11.1 Report the following information:

11.1.1 Complete identification of the material tested, including type, source, manufacturer's code number, form, principal dimensions, and previous history.

11.1.2 Specimen type (S or L), and tab width.

11.1.3 A statement of how the specimens were prepared, the testing conditions, including the size of the bolts and torque used, thickness range, and direction of testing with respect to anisotropy, if any.

11.1.4 The capacity of the pendulum in kilo-joules (or foot-pounds-force or inch-pounds-force).

11.1.5 The average and the standard deviation of the tensile-impact energy of specimens in the sample. If the ratio of the minimum value to maximum value is less than 0.75, report average and maximum and minimum values. If there is an apparent difference in the residual elongation observed due to some of the sample necking, report the number of specimens displaying necking.

11.1.6 Number of specimens tested per sample or lot of material (that is, five or ten or more).

12. Precision and Bias

12.1 The precision of this test method is based on two intralaboratory studies of ASTM D1822, Standard Test Method for Tensile Impact Energy to Break Plastics and Electrical Insulating Materials, the first in 1973 with eight laboratories, testing a single replicate of five specimens of L-type dumbbell geometry (with two gage widths); and a second study conducted in 2012 with a single laboratory testing two insulating materials in duplicate. Every "test result" represents an individual determination. Except for the analysis of only a single replicate by most participants, Practice E691 was followed for

Copyright by ASTM Int'l (all rights reserved); Wed Aug 27 02:43:21 EDT 2014
Downloaded/printed by
UNIVERSITY TEKNOLOGI MALAYSIA pursuant to License Agreement. No further reproductions authorized.

the design and analysis of the data; the details are given in ASTM Research Report No. D20–1258 and D20–1259.

12.1.1 *Repeatability (r)*—The difference between repetitive results obtained by the same operator in a given laboratory applying the same test method with the same apparatus under constant operating conditions on identical test material within short intervals of time would in the long run, in the normal and correct operation of the test method, exceed the following values only in one case in 20.

12.1.1.1 Repeatability can be interpreted as maximum difference between two results, obtained under repeatability conditions, that is accepted as plausible due to random causes under normal and correct operation of the test method.

12.1.1.2 Repeatability limits are listed in Table 1.[3]

12.1.2 *Reproducibility (R)*—The difference between two single and independent results obtained by different operators applying the same test method in different laboratories using different apparatus on identical test material would, in the long run, in the normal and correct operation of the test method, exceed the following values only in one case in 20.

12.1.2.1 Reproducibility can be interpreted as maximum difference between two results, obtained under reproducibility conditions, that is accepted as plausible due to random causes under normal and correct operation of the test method.

12.1.2.2 Reproducibility limits are listed in Table 2.[4]

12.1.3 The above terms (repeatability limit and reproducibility limit) are used as specified in Practice E177.

12.1.4 Any judgment in accordance with statement 12.1.1 would normally have an approximate 95 % probability of being correct, however the precision statistics obtained in this ILS must not be treated as exact mathematical quantities which are applicable to all circumstances and uses. The absence of laboratories reporting replicate results essentially guarantees that there will be times when differences greater than predicted by the ILS results will arise, sometimes with considerably greater or smaller frequency than the 95 % probability limit would imply. Consider the reproducibility limit as a general guide, and the associated probability of 95 % as only a rough indicator of what can be expected.

12.2 *Bias*—At the time of the study, there was no accepted reference material suitable for determining the bias for this test method, therefore no statement on bias is being made.

TABLE 1 Impact Energy (ft · lbf)

	Average[A]	Repeatability Standard Deviation	Repeatability Limit
	$\bar{x}$	s_r	r
Type L	43.75	0.636	1.782
Type S	29.80	0.424	1.188

[A]The average of the laboratories' calculated averages.

[3] Supporting data have been filed at ASTM International Headquarters and may be obtained by requesting Research Report RR:D20-1258. Contact ASTM Customer Service at service@astm.org.

[4] Supporting data have been filed at ASTM International Headquarters and may be obtained by requesting Research Report RR:D20-1259. Contact ASTM Customer Service at service@astm.org.

Copyright by ASTM Int'l (all rights reserved); Wed Aug 27 02:43:21 EDT 2014
Downloaded/printed by
UNIVERSITY TEKNOLOGI MALAYSIA pursuant to License Agreement. No further reproductions authorized.

TABLE 2 Impact Energy (ft · lbf)

	Average[A] $\bar{x}$	Reproducibility Standard Deviation s_R	Reproducibility Limit R
Nylon 6/6 w/ 33 % glass- ⅛ in.	58.2	24.2	67.6
Nylon 6/6 w/ 33 % glass- ¼ in.	61.7	17.8	49.8
Polycarbonate w/ 40 % glass- ⅛ in.	49.9	12.9	36.2
Polycarbonate w/ 40 % glass- ¼ in.	37.1	15.1	42.4
Modified PPO w/ 20 % glass- ⅛ in.	26.5	9.6	26.8
Modified PPO w/ 20 % glass- ¼ in.	36.1	6.2	17.2
Polypropylene w/ 20 % glass- ⅛ in.	21.9	6.3	17.7
Polypropylene w/ 20 % glass- ¼ in.	25.5	7.3	20.3
ABS w/ 30 % glass- ⅛ in.	21.3	5.4	15.0
ABS w/ 30 % glass- ¼ in.	23.5	6.0	16.9

[A]The average of the laboratories' calculated averages.

APPENDIXES

(Nonmandatory Information)

X1. DETERMINATION OF BOUNCE VELOCITY AND CORRECTION FACTOR

X1.1 General

X1.1.1 Upon contacting the anvil at the bottom of the swing of the pendulum, the crosshead bounces away with an initial velocity dependent upon the degree of elasticity of the contacting surface. The elastic compression and expansion of the metallic crosshead, both of which take place prior to the separation of the crosshead from the anvil, occur in a time interval given approximately by twice the crosshead thickness divided by the speed of sound in the metal of which the crosshead is made. This is usually of the order of 25 mm (1 in.) divided by 5080 m/s (200,000 in./s), or about 5×10^{-6} s. During this time the crosshead, moving at about 3.4 m/s (135 in./s) moves along about 17 µm (7×10^{-4} in.). For a test specimen with a modulus of 3.4 GPa (500,000 psi) and a specific gravity of 1.0 the sound speed in the sample would be only 1778 m/s (70,000 in./s) and a stress wave would move only about 10 mm (0.4 in.) in 5×10^{-6} s. Thus in this short time a stress wave would not have traveled through the plastic specimen to the end of the specimen clamped to the pendulum, and so the specimen would exert no retarding force on the crosshead at the instant it bounced away. Since this is the case, one can assume that the initial rebound velocity of the crosshead, v_1, is the same as that which is measured with no specimen in the pendulum.

X1.2 Determination of Bounce Velocity

X1.2.1 The determination of bounce velocity, v_1, of the free crosshead can be made by photographic analysis (high-speed movies or stroboscopic techniques) or by the coefficient of restitution method.

X1.2.2 It has been observed that in several cases the rebound velocity of the crosshead is about 1.88 m/s (6.2 ft/s). It has also been noted that under certain geometrical conditions, the coefficient of restitution of steel on steel is about 0.55 (Eshbach's *Handbook of Engineering Fundamentals*). Since 0.55×11.3 ft (3.44 m)/s = 6.2 ft (1.88 m)/s, it appears that an approximate value of the rebound velocity might be taken as 6.2 ft/s for steel crossheads, if the use of high speed moving pictures is impractical. However, the preferred method of determining crosshead rebound velocity is by photographic analysis.

X1.3 Determination of Correction Factor

X1.3.1 After impact and rebound of the crosshead, the specimen is pulled by two moving bodies, the pendulum with an energy of $MV^2/2$, and the crosshead with an energy of $mv^2/2$. When the specimen breaks, only that energy is recorded on the pendulum dial which is lost by the pendulum. Therefore, one must add the incremental energy contributed by the crosshead to determine the true energy used to break the specimen. Consider once again the moving crosshead before the specimen breaks. As the crosshead moves away from the anvil it is slowed down by the specimen, which is being stretched. If the specimen does not break very quickly, the crosshead velocity will diminish to zero and theoretically the crosshead could be brought back against the anvil and rebound again. This second bounce has not been observed in several high speed moving pictures taken of tensile-impact breaks, but if it does occur one can no longer assume that the specimen exerts no retarding force, and the determination of the crosshead velocity on the second bounce becomes relatively complex.

X1.3.2 If only a single bounce occurs, one can calculate the correction (that is, the incremental energy contributed by the crosshead) as follows:

By definition

$$E = (M/2)(V^2 - V^2) \quad \text{(X1.1)}$$

and by definition:

$$e = (m/2)(v_1^2 - v_2^2) \quad \text{(X1.2)}$$

where:

M = mass of pendulum, N·s^2/m (lbf·s^2/ft),
m = mass of crosshead, N·s^2/m (lbf·s^2/ft),

Copyright by ASTM Int'l (all rights reserved); Wed Aug 27 02:43:21 EDT 2014
Downloaded/printed by
UNIVERSITY TEKNOLOGI MALAYSIA pursuant to License Agreement. No further reproductions authorized.

V = maximum velocity of center of percussion of crosshead of pendulum, m/s (ft/s),
V_2 = velocity of center of percussion of pendulum at time when specimen breaks, m/s (ft/s),
v_1 = crosshead velocity immediately after bounce, m/s (ft/s),
v_2 = crosshead velocity at time when specimen breaks, m/s (ft/s),
E = energy read on pendulum dial, J (ft·lbf), and
e = energy contribution of crosshead, that is, bounce correction factor to be added to pendulum reading, J (ft·lbf).

Once the rebound of the crosshead has occurred, the momentum of the system (in a horizontal direction) must remain constant. Neglecting vertical components of the momentum one can write:

$$MV - mv_1 = MV_2 - mv_2 \quad \text{(X1.3)}$$

Eq X1.1-X1.3 can be combined to give:

$$e = m/2\left\{v_1^2 - \left[v_1 - M/m\right)\left(V - \sqrt{(V)^2 - (2E/M)}\right)\right]^2 \quad \text{(X1.4)}$$

If e is plotted as a function of E (for fixed values of V, M, m, and v_1), e will increase from zero, pass through a maximum (equal to $mv_1^2/2$), and decrease, passing again through zero and becoming negative. The only part of this curve for which a reasonably accurate analysis has been made is the initial portion where the curve lies between values of zero and $mv_1^2/2$. Once the crosshead reverses the direction of its travel, the correction becomes less clearly defined, and after a second contact with the anvil has been made, the correction becomes much more difficult to evaluate. It is assumed, therefore, for the sake of simplicity, that once e has reached its maximum value, the correction factor will remain constant at a value of $mv_1^2/2$. It should be clearly realized that the use of that portion of the curve in Fig. 5 where e is constant does not give an accurate correction. However, as E grows larger, the correction factor becomes relatively less important and no great sacrifice of overall accuracy results from the assumption that the maximum correction is $mv_1^2/2$.

X2. SET-UP AND CALIBRATION PROCEDURE FOR LOW CAPACITY 1.4 TO 22 J (1 TO 16 FT·LBF), TENSION-IMPACT MACHINES FOR USE WITH PLASTIC SPECIMENS

X2.1 Locate impact machine on a sturdy bench. It shall not "walk" on the bench and the bench shall not vibrate appreciably. Loss on energy from vibrations will give high readings. It is recommended that the impact tester be bolted to a bench weighing at least 23 kg (50 lb) if it is used at capacities higher than 2.7 J (2 ft·lbf).

X2.2 Check the levelness of the machine in both directions in the plane of the base with spirit levels mounted in the base, by a machinist's level if a satisfactory reference surface is available, or with a plumb bob. The machine should be level to within $\tan^{-1}$ 0.001 in the plane of swing and to within $\tan^{-1}$ 0.002 in the plane perpendicular to the swing.

X2.3 Check for signs of rubbing or interference between the pendulum head and the anvil and check the side clearance between the pendulum head and anvil while the pendulum hangs freely. Unequal side clearances may indicate a bent pendulum arm, bent shaft, or faulty bearings. Excessive side play may also indicate faulty bearings. If free-hanging side clearances are equal, but there are signs of interference, the pendulum may not have sufficient rigidity. Readjust the shaft bearings, relocate the anvil, or straighten the pendulum shaft as necessary to attain the proper relationship between the pendulum head and the anvil.

X2.4 Check the pendulum arm for straightness within 1.2 mm (0.05 in.) with a straightedge or by sighting down the shaft. This arm is sometimes bent by allowing the pendulum to slam against the catch when high-capacity weights are on the pendulum.

X2.5 Swing the pendulum to a horizontal position and support it by a string clamped in the vise of the pendulum head so that the string is positioned exactly on the longitudinal centerline of the specimen. Attach the other end of the string to a suitable load-measuring device. The pendulum weight should be within 0.4 % of the required weight for that pendulum capacity. If weight must be added or removed, take care to balance the added or removed weight about the center of percussion. It is not advisable to add weight to the opposite side of the bearing axis from the head to increase the effective length of the pendulum since the distributed mass will lead to large energy losses from vibration of the pendulum.

TABLE X2.1 Round-Robin Calibration Tests[5]

Thickness of 5052 Aluminum, in.	Machine Capacity		Tensile-Impact Strength		Approximate Standard Deviation	
	J	ft·lbf	kJ/m^2	ft·lbf/in.^{2}	kJ/m^2	ft·lbf/in.^{2}
0.020	5.4 (1)[A]	4 (1)	622	296	55	26
	6.8 (4)	5 (4)	559	266	55	26
	20 (2)	15 (2)	542	258	110	52
0.050	5.4 (1)	4 (1)	748	356	72	34
	6.8 (4)	5 (4)	732	348	53	25
	20 (2)	15 (2)	666	317	44	21

[A] Numbers in parentheses show the number of machines used in obtaining the average values.

Copyright by ASTM Int'l (all rights reserved); Wed Aug 27 02:43:21 EDT 2014
Downloaded/printed by
UNIVERSITY TEKNOLOGI MALAYSIA pursuant to License Agreement. No further reproductions authorized.

TABLE X2.2 Converting Tensile-Impact Units

Multiply	by	To Obtain
Inch-pounds-force	0.113	Joules
Foot-pounds-force	1.356	Joules
Joules	8.85	Inch-pounds-force
Joules	0.738	Foot-pounds-force
Foot-pounds-force/inch^2	2.101	Kilojoules/metre^2
Kilojoules/metre^2	0.476	Foot-pounds-force/inch^2

X2.6 Calculate the effective length of the pendulum arm, or the distance to the center of percussion from the axis of rotation, by the procedure of Note 3. The effective length must be within 1 % of the distance from the center of rotation to the striking edge.

X2.7 Measure the vertical distance of fall of the pendulum center of percussion from the trip height to its lowest point. The distance should be 610 ± 2 mm (24 ± 0.1 in.). The vertical falling distance may be adjusted by varying the position of the pendulum latch.

X2.8 When the pendulum is in the position where the crosshead just touches the anvil the pointer should be at the full scale index within 0.2 % of scale.

X2.9 The pointer friction should be adjusted so that the pointer will just maintain its position anywhere on the scale. The striking pin of the pointer should be securely fastened to the pointer. The friction device should be adjusted in accordance with the recommendations of the manufacturer.

X2.10 The free swing reading of a 2.7-J (2-ft·lbf) pendulum (without specimen) from the tripping height should be less than 2.5 % of scale on the first swing. If the reading is higher than this then the pointer friction is excessive or the bearings are dirty. To clean the bearings dip them in grease solvent and spin dry in an air jet. Clean the bearings until they spin freely, or replace them. Oil very lightly with instrument oil before replacing. A reproducible method of starting the pendulum from the proper height must be devised.

X2.11 The position of the pointer after three swings of the pendulum, each from the starting position, without manual readjustment of the pointer should be between ½ and 1 % of the scale. If the readings differ from this, then the machine is not level, the calibration dial is out of alignment, or the pendulum finger is out of calibration position.

X2.12 The shaft about which the pendulum rotates shall have no detectable radial play (less than 0.05 mm (0.002 in.)). An end play of 0.25 mm (0.010 in.) is permissible when a 1-kg (2.2-lb) axial force is applied in alternate directions. This shaft shall be horizontal within $\tan^{-1}$ 0.003 as checked with a level.

X2.13 The center of the anvil faces shall lie in a plane parallel to the shaft axis of the pendulum within $\tan^{-1}$ 0.001. The anvil faces shall be parallel to the transverse and vertical axis of the pendulum within $\tan^{-1}$ 0.001. One side of the crosshead shall not make contact with the anvil later than 0.05 mm (0.002 in.) after the other side has made contact. This measurement can be made by holding the crosshead in place in the pendulum head with the hand and feeling click of the sides of the crosshead against the anvil while thin shims are inserted between the side of the crosshead and the anvil. If the crosshead is not being contacted evenly check the crosshead for nicks and burrs and then the pendulum for twisting.

X2.14 The top of the machine base and the approach to the anvil should be surfaced with a soft rubber or plastic material having a low coefficient of friction with the crosshead so that the crosshead can slide or bounce free of the anvil after impact. This is to ensure that the crosshead does not come in contact with the pendulum on the backswing. Otherwise considerable damage to the crosshead and pendulum may result.

X2.15 The machine should not be used to indicate more than 85 % of the energy capacity of the pendulum.

X2.16 A jig shall be provided for locating the specimen so that it will be parallel to the base of the machine at the instant of strike within $\tan^{-1}$ 0.01 and coincident with the center of strike within 0.25 mm (0.01 in.).

X2.17 For checking the accuracy and reliability of the tension-impact machines use standard specimens made from 5052 H-32 aluminum. For low-capacity tension-impact machines 0.458-mm (0.020-in.) thick specimens may be used and for high-capacity tension-impact machines 1.27-mm (0.050-in.) specimens are recommended. In round-robin calibration tests on ten standard "L" specimens the six participating laboratories averaged the standard deviations shown in Table X2.1. Standard specimens may be obtained from Koehler Instrument Co., Inc., 1595 Sycamore Ave., Bohemia, L. I., NY 11716.

X2.18 In converting tension-impact units use Table X2.2 to multiply the quantity in the units on the left by the number in the center to convert to the units on the right.

Copyright by ASTM Int'l (all rights reserved); Wed Aug 27 02:43:21 EDT 2014
Downloaded/printed by
UNIVERSITY TEKNOLOGI MALAYSIA pursuant to License Agreement. No further reproductions authorized.

SUMMARY OF CHANGES

Committee D20 has identified the location of selected changes to this standard since the last issue, D1822 - 06, that may impact the use of this standard. (September 1, 2013)

(1) Revised entire standard for clarity and to eliminate non-mandatory language.
(2) Revised Sections 1, 2, 5, 6, 8, 9, and 12.
(3) Revised ISO Equivalency statement in Note 1.
(4) Added Note 4 and renumber subsequent notes.
(5) Eliminated old Section 7—Sampling, and renumber subsequent sections.

ASTM International takes no position respecting the validity of any patent rights asserted in connection with any item mentioned in this standard. Users of this standard are expressly advised that determination of the validity of any such patent rights, and the risk of infringement of such rights, are entirely their own responsibility.

This standard is subject to revision at any time by the responsible technical committee and must be reviewed every five years and if not revised, either reapproved or withdrawn. Your comments are invited either for revision of this standard or for additional standards and should be addressed to ASTM International Headquarters. Your comments will receive careful consideration at a meeting of the responsible technical committee, which you may attend. If you feel that your comments have not received a fair hearing you should make your views known to the ASTM Committee on Standards, at the address shown below.

This standard is copyrighted by ASTM International, 100 Barr Harbor Drive, PO Box C700, West Conshohocken, PA 19428-2959, United States. Individual reprints (single or multiple copies) of this standard may be obtained by contacting ASTM at the above address or at 610-832-9585 (phone), 610-832-9555 (fax), or service@astm.org (e-mail); or through the ASTM website (www.astm.org). Permission rights to photocopy the standard may also be secured from the ASTM website (www.astm.org/COPYRIGHT/).

Copyright by ASTM Int'l (all rights reserved); Wed Aug 27 02:43:21 EDT 2014
Downloaded/printed by
UNIVERSITY TEKNOLOGI MALAYSIA pursuant to License Agreement. No further reproductions authorized.