AWS D1.2/D1.2M:2008
An American National Standard

# Structural Welding Code—Aluminum

American Welding Society

Approved American National Standard
ANSI

Copyright American Welding Society
Provided by IHS under license with AWS
No reproduction or networking permitted without license from IHS

Licensee=University of Texas Revised Sub Account/5620001114
Not for Resale, 08/29/2012 23:44:22 MDT

**AWS D1.2/D1.2M:2008**
**An American National Standard**

**Approved by the**
**American National Standards Institute**
**June 23, 2008**

# Structural Welding Code—Aluminum

**Fifth Edition**

**Supersedes AWS D1.2/D1.2M:2003**

Prepared by the
American Welding Society (AWS) D1 Committee on Structural Welding

Under the Direction of the
AWS Technical Activities Committee

Approved by the
AWS Board of Directors

## Abstract

This code covers the welding requirements for any type structure made from aluminum structural alloys, except for aluminum pressure vessels and pressure piping. Clauses 1 through 7 constitute a body of rules for the regulation of welding in aluminum construction. A commentary on the code is also included with the document.

**American Welding Society**
**550 N.W. LeJeune Road, Miami, FL 33126**

Copyright American Welding Society
Provided by IHS under license with AWS
No reproduction or networking permitted without license from IHS

Licensee=University of Texas Revised Sub Account/5620001114
Not for Resale, 08/29/2012 23:44:22 MDT

International Standard Book Number: 978-0-87171-664-4
American Welding Society
550 N.W. LeJeune Road, Miami, FL 33126
© 2008 by American Welding Society
All rights reserved
Printed in the United States of America

**Photocopy Rights.** No portion of this standard may be reproduced, stored in a retrieval system, or transmitted in any form, including mechanical, photocopying, recording, or otherwise, without the prior written permission of the copyright owner.

Authorization to photocopy items for internal, personal, or educational classroom use only or the internal, personal, or educational classroom use only of specific clients is granted by the American Welding Society provided that the appropriate fee is paid to the Copyright Clearance Center, 222 Rosewood Drive, Danvers, MA 01923, tel: (978) 750-8400; Internet: <www.copyright.com>.



--`,,`,`,,,,,,```,,,``,,,`,```,,-`-`,,`,`,`,,`---
Copyright American Welding Society
Provided by IHS under license with AWS
No reproduction or networking permitted without license from IHS
Licensee=University of Texas Revised Sub Account/5620001114
Not for Resale, 08/29/2012 23:44:22 MDT

## Statement on the Use of American Welding Society Standards

All standards (codes, specifications, recommended practices, methods, classifications, and guides) of the American Welding Society (AWS) are voluntary consensus standards that have been developed in accordance with the rules of the American National Standards Institute (ANSI). When AWS American National Standards are either incorporated in, or made part of, documents that are included in federal or state laws and regulations, or the regulations of other governmental bodies, their provisions carry the full legal authority of the statute. In such cases, any changes in those AWS standards must be approved by the governmental body having statutory jurisdiction before they can become a part of those laws and regulations. In all cases, these standards carry the full legal authority of the contract or other document that invokes the AWS standards. Where this contractual relationship exists, changes in or deviations from requirements of an AWS standard must be by agreement between the contracting parties.

AWS American National Standards are developed through a consensus standards development process that brings together volunteers representing varied viewpoints and interests to achieve consensus. While the AWS administers the process and establishes rules to promote fairness in the development of consensus, it does not independently test, evaluate, or verify the accuracy of any information or the soundness of any judgments contained in its standards.

AWS disclaims liability for any injury to persons or to property, or other damages of any nature whatsoever, whether special, indirect, consequential, or compensatory, directly or indirectly resulting from the publication, use of, or reliance on this standard. AWS also makes no guarantee or warranty as to the accuracy or completeness of any information published herein.

In issuing and making this standard available, AWS is neither undertaking to render professional or other services for or on behalf of any person or entity, nor is AWS undertaking to perform any duty owed by any person or entity to someone else. Anyone using these documents should rely on his or her own independent judgment or, as appropriate, seek the advice of a competent professional in determining the exercise of reasonable care in any given circumstances. It is assumed that the use of this standard and its provisions are entrusted to appropriately qualified and competent personnel.

This standard may be superseded by the issuance of new editions. Users should ensure that they have the latest edition.

Publication of this standard does not authorize infringement of any patent or trade name. Users of this standard accept any and all liabilities for infringement of any patent or trade name items. AWS disclaims liability for the infringement of any patent or product trade name resulting from the use of this standard.

Finally, the AWS does not monitor, police, or enforce compliance with this standard, nor does it have the power to do so.

On occasion, text, tables, or figures are printed incorrectly, constituting errata. Such errata, when discovered, are posted on the AWS web page (www.aws.org).

Official interpretations of any of the technical requirements of this standard may only be obtained by sending a request, in writing, to the appropriate technical committee. Such requests should be addressed to the American Welding Society, Attention: Managing Director, Technical Services Division, 550 N.W. LeJeune Road, Miami, FL 33126 (see Annex L). With regard to technical inquiries made concerning AWS standards, oral opinions on AWS standards may be rendered. These opinions are offered solely as a convenience to users of this standard, and they do not constitute professional advice. Such opinions represent only the personal opinions of the particular individuals giving them. These individuals do not speak on behalf of AWS, nor do these oral opinions constitute official or unofficial opinions or interpretations of AWS. In addition, oral opinions are informal and should not be used as a substitute for an official interpretation.

This standard is subject to revision at any time by the AWS D1 Committee on Structural Welding. It must be reviewed every five years, and if not revised, it must be either reaffirmed or withdrawn. Comments (recommendations, additions, or deletions) and any pertinent data that may be of use in improving this standard are required and should be addressed to AWS Headquarters. Such comments will receive careful consideration by the AWS D1 Committee on Structural Welding and the author of the comments will be informed of the Committee's response to the comments. Guests are invited to attend all meetings of the AWS D1 Committee on Structural Welding to express their comments verbally. Procedures for appeal of an adverse decision concerning all such comments are provided in the Rules of Operation of the Technical Activities Committee. A copy of these Rules can be obtained from the American Welding Society, 550 N.W. LeJeune Road, Miami, FL 33126.



Copyright American Welding Society
Provided by IHS under license with AWS
No reproduction or networking permitted without license from IHS
Licensee=University of Texas Revised Sub Account/5620001114
Not for Resale, 08/29/2012 23:44:22 MDT

This page is intentionally blank.

--`,,`,`,,,,,,```,,,,```,,,,```,,,,-`-`,,`,,`,`,,`---



Copyright American Welding Society
Provided by IHS under license with AWS
No reproduction or networking permitted without license from IHS

Licensee=University of Texas Revised Sub Account/5620001114
Not for Resale, 08/29/2012 23:44:22 MDT

# Dedication

*In Memoriam*

**Paul B. Dickerson**
**1926–2004**

**This issue of AWS D1.2, *Structural Welding Code—Aluminum*, is dedicated to the memory of Paul B. Dickerson. Paul was instrumental in the inception of the first *Structural Welding Code—Aluminum* and a moving force in its growth over the years. Paul was an internationally renowned engineer, as well as an educator and mentor to many in the welding community. He was always ready to share his almost immeasurable expertise with anyone who needed help. His good nature and humor made it a joy to work with him.**

**Paul will be greatly missed by all of us.**



Copyright American Welding Society
Provided by IHS under license with AWS
No reproduction or networking permitted without license from IHS
Licensee=University of Texas Revised Sub Account/5620001114
Not for Resale, 08/29/2012 23:44:22 MDT

This page is intentionally blank.



Copyright American Welding Society
Provided by IHS under license with AWS
No reproduction or networking permitted without license from IHS

Licensee=University of Texas Revised Sub Account/5620001114
Not for Resale, 08/29/2012 23:44:22 MDT

# Personnel

## AWS D1 Committee on Structural Welding

| | |
|---|---|
| D. D. Rager, Chair | *Rager Consulting, Incorporated* |
| D. K. Miller, 1st Vice Chair | *The Lincoln Electric Company* |
| A. W. Sindel, 2nd Vice Chair | *Sindel and Associates* |
| S. Morales, Secretary | *American Welding Society* |
| N. J. Altebrando | *STV, Incorporated* |
| F. G. Armao | *The Lincoln Electric Company* |
| E. L. Bickford | *Acute Technological Services* |
| F. C. Breismeister | *Strocal, Incorporated* |
| B. M. Butler | *Walt Disney World Company* |
| H. H. Campbell, III | *Parker Drilling* |
| L. E. Collins | *Team Industries, Incorporated* |
| R. B. Corbit | *Exelon Nuclear Corporation* |
| R. A. Dennis | *Consultant* |
| M. A. Grieco | *Massachusetts Highway Department* |
| C. W. Holmes | *Modjeski and Masters, Incorporated* |
| J. J. Kenney | *Shell International E &P* |
| J. H. Kiefer | *ConocoPhillips Company* |
| V. Kuruvilla | *Genesis Quality Systems* |
| J. Lawmon | *American Engineering & Manufacturing, Incorporated* |
| D. R. Lawrence, II | *Butler Manufacturing Company* |
| N. S. Lindell | *Inspectech Incorporated* |
| D. R. Luciani | *Canadian Welding Bureau* |
| S. L. Luckowski | *Department of the Army* |
| P. W. Marshall | *MHP Systems Engineering* |
| M. J. Mayes | *Mayes Testing Engineers, Incorporated* |
| D. L. McQuaid | *D L McQuaid and Associates, Incorporated* |
| R. D. Medlock | *High Steel Structures, Incorporated* |
| J. Merrill | *MACTEC, Incorporated* |
| T. L. Niemann | *Minnesota Department of Transportation* |
| J. B. Pearson, Jr. | *LTK Engineering Services* |
| D. C. Phillips | *Hobart Brothers Company* |
| J. W. Post | *J. W. Post and Associates, Incorporated* |
| T. Schlafly | *American Institute of Steel Construction* |
| D. R. Scott | *PSI (Retired)* |
| D. A. Shapira | *URS—Washington Division* |
| R. E. Shaw, Jr. | *Steel Structures Technology Center, Incorporated* |
| R. W. Stieve | *Greenman-Pederson, Incorporated* |
| P. J. Sullivan | *Massachusetts Highway Department (Retired)* |
| M. M. Tayarani | *Massachusetts Highway Department* |
| K. K. Verma | *Federal Highway Administration* |
| B. D. Wright | *Advantage Aviation Technologies* |

### Advisors to the AWS D1 Committee on Structural Welding

| | |
|---|---|
| W. G. Alexander | *WGAPE* |
| E. M. Beck | *MACTEC, Incorporated* |



Copyright American Welding Society
Provided by IHS under license with AWS
No reproduction or networking permitted without license from IHS

Licensee=University of Texas Revised Sub Account/5620001114
Not for Resale, 08/29/2012 23:44:22 MDT

**Advisors to the AWS D1 Committee on Structural Welding (Continued)**

| | |
|---|---|
| O. W. Blodgett | *The Lincoln Electric Company* |
| M. V. Davis | *Consultant* |
| G. L. Fox | *Consultant* |
| G. J. Hill | *G. J. Hill and Associates, Incorporated* |
| M. L. Hoitomt | *Hoitomt Consulting Services* |
| W. A. Milek, Jr. | *Consultant* |
| J. E. Myers | *Consultant* |

## AWS D1G Subcommittee on Aluminum Structures

| | |
|---|---|
| F. G. Armao, Chair | *The Lincoln Electric Company* |
| T. Anderson, Vice Chair | *ESAB Welding & Cutting Products* |
| S. Morales, Secretary | *American Welding Society* |
| M. V. Davis | *Consultant* |
| D. R. Haydock | *American Bureau of Shipping* |
| C. W. Hayes | *The Lincoln Electric Company* |
| J. R. Kissell | *The TGB Partnership* |
| D. R. Luciani | *Canadian Welding Bureau* |
| G. Mercier | *Hapco Aluminum Pole Products* |
| R. C. Minor | *Hapco Aluminum Pole Products* |
| P. J. Sullivan | *Massachusetts Highway Department (Retired)* |
| J. L. Uebele | *Waukesha County Technical College* |
| K. L. Williams | *Alcoa Technical Center* |

**Advisors to the AWS D1G Subcommittee on Aluminum Structures**

| | |
|---|---|
| C. R. Briden | *Consultant* |
| C. K. Nicholson | *MACTEC, Incorporated* |



Copyright American Welding Society
Provided by IHS under license with AWS
No reproduction or networking permitted without license from IHS
Licensee=University of Texas Revised Sub Account/5620001114
Not for Resale, 08/29/2012 23:44:22 MDT

# Foreword

This foreword is not part of AWS D1.2/D1.2M:2008, *Structural Welding Code—Aluminum*, but is included for informational purposes only.

In the early 1970s, interest was expressed in developing a consolidated code for the structural welding of aluminum similar to the AWS D1.1, *Structural Welding Code—Steel*. Because of the interest of both The Aluminum Association and the American Welding Society, it was decided to begin in the mid-70s the task of developing a structural welding code for aluminum. Initially, the effort was undertaken by a task force of The Aluminum Association. In 1979, this task force became a subcommittee of the AWS Structural Welding Committee and the *Structural Welding Code—Aluminum* resulted from the continued activity of that subcommittee.

The first edition of the *Structural Welding Code—Aluminum* (hereafter referred to as the *code*) represented the continuing AWS policy to provide standards for structural welding. This code is provided for the fabrication, erection and manufacturing industries as a set of rules and regulations for the welding of structural aluminum. Some of the more important aspects of this edition of the code are outlined in the following paragraphs.

Recommended joint details have been prepared for numerous complete joint penetration groove welded joints. Herein lies one of the major differences between the *Structural Welding Code—Steel* and this code. While the steel code allows for prequalified welding procedures, this code does not. This is mainly because of the many and varied possible welding conditions that can be obtained with semiautomatic welding variables most often used with aluminum and the wide range of both heat-treatable and nonheat-treatable alloys that may be welded under this code. Therefore, all of the joint details and the welding procedures used with this code shall be individually qualified and included in the Welding Procedure Specification (WPS).

Procedures and standards are outlined for several methods of nondestructive testing. Methods included are visual, radiographic and dye-penetrant. Ultrasonic testing is permitted, but the procedure and acceptance criteria shall be specified in the contract documents.

This code does not concern itself with such design considerations as the arrangements of parts, loading, and the computation of stresses for proportioning the load-carrying members of a structure and their connection. Such considerations, it is assumed, are covered elsewhere in a general code or specification, such as the *Specification for Aluminum Structures* (The Aluminum Association).

Many of the users of this code will also be users of the *Structural Welding Code—Steel*. As a result, it was felt that as much similarity as possible between the codes for steel and aluminum should be achieved. Thus, the same general format was used in the development of the 1983 and 1990 editions of the aluminum code as in the steel code. The D1.2-97 code was reorganized so that the 1990 Clauses 4 and 5 (Technique and Qualification) were merged into one new Clause 4. Furthermore, Appendix H of D1.2-90 was moved to after the Preface. Clauses 1 through 7 constitute a body of rules for the regulation of welding on aluminum structures. The 2003 edition represented a major reorganization of the D1.2-97 format. For example, Clauses 7, 8, and 9 of D1.2-97 were eliminated, and their provisions distributed throughout the code.

In this edition of D1.2/D1.2M:2008, the following major revisions have been made:

(1) Addition of design criteria for PJP groove welds for GTAW and GMAW.

(2) Addition of new alloys in Tables 3.2, 4.2, 6.2, and 6.3; new materials in Table 4.1.

(3) Revision of positions qualified in Table 3.3 for Pipe-Groove CJP.

(4) Modifications made to Figure 3.18.



Copyright American Welding Society
Provided by IHS under license with AWS
No reproduction or networking permitted without license from IHS
Licensee=University of Texas Revised Sub Account/5620001114
Not for Resale, 08/29/2012 23:44:22 MDT

(5) Addition of new Table 4.6 for Weld Appearances.

(6) Inclusion of acceptance criteria for RT in tubular connections in 5.15.2.

(7) Deletion of Table 5.3, Acceptable Undercut Values; Table 5.5, Acceptance Criteria—Class I Structures; Table 4.6, Acceptance Criteria—Class II Structures; and Table 4.7, Maximum Acceptable Porosity in Radiographs for Any 3 in Length Weld.

(8) Figure 5.8 extensively modified and renamed as Maximum Acceptable Discontinuities RT Images.

(9) Deletion of Figure 5.9, Acceptable Undercut for Total Length of Joint—Class I Tubular Structures.

(10) Inclusion of recommended partial penetration groove welded joints in Annex B.

(11) Deletion of Annex L, Reorganization.

(12) Removal of Commentary C-4.19 and C-5.14.

(13) Addition of visual radiography standards.

(14) Inclusion of standards for visual inspection of surface porosity.

All editorial and technical changes to the text are indicated by underlining. Changes to illustrations are indicated by a single vertical line.

**Commentary.** The Commentary is nonmandatory and is intended only to provide insightful information into provision rationale.

**Normative Annexes.** These annexes address specific subjects in the code and their requirements are mandatory requirements that supplement the code provisions.

**Informative Annexes.** These annexes are not code requirements but are provided to clarify code provisions by showing examples, providing information, or suggesting alternative good practices.

**Index.** As in previous codes, the entries in the Index are referred to by subclause number rather than by page number. This should enable the user of the Index to locate a particular item of interest in minimum time.

**Errata.** It is the Structural Welding Committee's policy that all errata should be made available to users of the code. Therefore, any significant errata will be published in the Society News Section of the AWS *Welding Journal* and posted on the AWS web site at: http://www.aws.org/technical/d1/.

**Suggestions.** Your comments for improving AWS D1.2/D1.2M:2008, *Structural Welding Code—Aluminum*, are welcome. Submit comments to the Managing Director, Technical Services Division, American Welding Society, 550 N.W. LeJeune Road, Miami, FL 33126; telephone (305) 443-9353; fax (305) 443-5951; e-mail info@aws.org; or via the AWS web site <http://www.aws.org>.



Copyright American Welding Society
Provided by IHS under license with AWS
No reproduction or networking permitted without license from IHS
Licensee=University of Texas Revised Sub Account/5620001114
Not for Resale, 08/29/2012 23:44:22 MDT

# Table of Contents

**Page No.**

*Dedication* ..... v
*Personnel* ..... vii
*Foreword* ..... ix
*List of Tables* ..... xiv
*List of Figures* ..... xv

**1. General Requirements** ..... 1
1.1 Scope ..... 1
1.2 Approval ..... 1
1.3 Definitions ..... 1
1.4 Welding Symbols ..... 1
1.5 Safety Precautions ..... 1
1.6 Standard Units of Measure ..... 1
1.7 Reference Documents ..... 1

**2. Design of Welded Connections** ..... 3
2.0 Scope ..... 3
2.1 Structural Design ..... 3
2.2 Drawings ..... 3
2.3 Groove Welds ..... 4
2.4 Fillet Welds ..... 4
2.5 Plug and Slot Welds ..... 5
2.6 Filler Plates ..... 5

**3. Qualification** ..... 9
Part A—General Requirements ..... 9
3.1 General ..... 9
3.2 Qualification of WPSs ..... 9
3.3 Qualification of Welders, Welding Operators, and Tack Welders ..... 10
3.4 Position of Test Welds ..... 10

Part B—Types of Tests, Test Methods, and Acceptance Criteria ..... 11
3.5 Types and Purposes of Tests ..... 11
3.6 Visual Examination ..... 11
3.7 Tension Tests—Groove Welds ..... 12
3.8 Bend Tests—Groove Welds—Plate and Pipe ..... 12
3.9 Soundness Tests—Groove Welds in Castings ..... 14
3.10 Soundness Tests—Fillet Welds ..... 14
3.11 Radiographic Examination ..... 15

Part C—WPS Qualification ..... 15
3.12 General ..... 15
3.13 Limits of Qualified Positions for WPSs ..... 15
3.14 Limitation of Essential Variables—WPS Qualification ..... 15
3.15 Tests—WPS Qualification ..... 15
3.16 Retests ..... 16

Part D—Performance Qualification ..... 16
3.17 General ..... 16
3.18 Limits of Qualified Positions for Performance ..... 17



Copyright American Welding Society
Provided by IHS under license with AWS
No reproduction or networking permitted without license from IHS
Licensee=University of Texas Revised Sub Account/5620001114
Not for Resale, 08/29/2012 23:44:22 MDT

**Page No.**

3.19 Preparation of Test Weldments—Performance Qualification ..... 17
3.20 Essential Variables ..... 18
3.21 Tests—Performance Qualification ..... 18
3.22 Retests ..... 18
3.23 Period of Effectiveness ..... 19

**4. Fabrication** ..... 65
4.0 Scope ..... 65
4.1 Processes ..... 65
4.2 Base Metal ..... 65
4.3 Filler Metal ..... 65
4.4 Tungsten Electrodes ..... 65
4.5 Shielding Gas ..... 65
4.6 Welding and Cutting Equipment ..... 65
4.7 Backing ..... 66
4.8 Preheat and Interpass Temperatures ..... 66
4.9 Welding Environment ..... 66
4.10 Compliance with Design ..... 66
4.11 Preparation of Base Metal ..... 66
4.12 Assembly ..... 67
4.13 Technique ..... 68
4.14 Tack and Temporary Welds ..... 68
4.15 Dimensional Tolerances for Welded Members ..... 68
4.16 Arc Strikes ..... 69
4.17 Weld Termination ..... 69
4.18 Control of Distortion and Shrinkage ..... 69
4.19 Weld Profiles ..... 70
4.20 Repairs ..... 70
4.21 Copper Inclusions ..... 71
4.22 Cleaning of Completed Welds ..... 71
4.23 Anti-Spatter Compound ..... 71
4.24 Postweld Heat Treatment ..... 71

**5. Inspection** ..... 79
Part A—General Requirements ..... 79
5.1 General ..... 79
5.2 Inspection of Materials ..... 80
5.3 Inspection of WPS Qualification and Equipment ..... 80
5.4 Inspection of Welder, Welding Operator, and Tack Welder Qualifications ..... 80
5.5 Inspection of Work and Records ..... 80
5.6 Obligations of the Contractor ..... 80
5.7 Nondestructive Testing ..... 81
5.8 Extent of Testing ..... 81

Part B—Radiographic Testing of Groove Welds in Butt Joints ..... 82
5.9 General ..... 82
5.10 RT Procedures ..... 82
5.11 Acceptability of Welds ..... 84
5.12 Examination, Report, and Disposition of Radiographs ..... 84

Part C—Ultrasonic Testing of Groove Welds ..... 84
5.13 General ..... 84

Part D—Acceptance Criteria ..... 85
5.14 Visual Inspection ..... 85
5.15 RT ..... 85



Copyright American Welding Society
Provided by IHS under license with AWS
No reproduction or networking permitted without license from IHS

Licensee=University of Texas Revised Sub Account/5620001114
Not for Resale, 08/29/2012 23:44:22 MDT

**Page No.**

5.16 UT ..... 86
5.17 PT ..... 86

**6. Stud Welding** ..... 97
Part A—General Requirements ..... 97
6.1 General ..... 97
6.2 Material Requirements ..... 97
6.3 Workmanship ..... 97
6.4 Qualification Requirements ..... 97
6.5 Operator and Preproduction Qualification ..... 99
6.6 Acceptance Criteria—Production Welds ..... 99
6.7 Mislocated Studs ..... 99
6.8 Repair of Misapplied Studs ..... 99

Part B—Arc Stud Welding ..... 99
6.9 General Requirements ..... 99
6.10 Material Requirements ..... 99
6.11 Workmanship ..... 99
6.12 Technique ..... 100

Part C—Capacitor Discharge Stud Welding ..... 100
6.13 General Requirements ..... 100
6.14 Material Requirements ..... 100
6.15 Technique ..... 100

**7. Strengthening and Repair of Existing Structures** ..... 105
7.1 General ..... 105
7.2 Base Metal ..... 105
7.3 Design ..... 105
7.4 Repair Procedure ..... 105
7.5 Inspection ..... 105

Annex A (Informative)—Reference Documents ..... 107
Annex B (Informative)—Recommended Groove Welded Joints ..... 109
Annex D (Informative)—Examples of Tubular Connections ..... 145
Annex E (Informative)—Effective Throat ..... 149
Annex F (Informative)—Sample Welding Forms ..... 151
Annex G (Informative)—Sample NDT Forms ..... 159
Annex H (Informative)—Solutions for Macroetching Aluminum Weldments ..... 163
Annex I (Informative)—Guide for Specification Writers ..... 165
Annex J (Informative)—Safe Practices ..... 167
Annex K (Informative)—Tungsten Electrodes ..... 171
Annex L (Informative)—Guidelines for the Preparation of Technical Inquiries ..... 173

*Commentary* ..... 175
Foreword ..... 177

Index ..... 201

List of AWS Documents on Structural Welding ..... 209



Copyright American Welding Society
Provided by IHS under license with AWS
No reproduction or networking permitted without license from IHS
Licensee=University of Texas Revised Sub Account/5620001114
Not for Resale, 08/29/2012 23:44:22 MDT

# List of Tables

**Table** **Page No.**


2.1 Minimum Diameter of Hole for Plug Welds or Width of Slot for Slot Welds ..... 6
3.1 Limitations of Essential Variables of a WPS ..... 20
3.2 Tensile Strength of Welded Aluminum Alloys (GTAW or GMAW with No Postweld Heat Treatment) ..... 22
3.3 WPS Qualification—Type of Weld and Position Limitations ..... 24
3.4 Number and Type of Test Specimens and Range of Thickness Qualified—WPS Qualification—CJP Groove Welds ..... 25
3.5 Number and Type of Test Specimens and Range of Thickness Qualified—WPS Qualification—PJP Groove Welds ..... 28
3.6 Number and Type of Test Specimens and Range of Thickness Qualified—WPS Qualification—Fillet Welds ..... 29
3.7 Welder Performance Qualification—Type of Weld and Position Limitations ..... 30
3.8 Number and Type of Test Specimens and Range of Thickness Qualified—Welder and Welding Operator Qualification ..... 31
3.9 Welding Personnel Performance Essential Variable Changes Requiring Requalification ..... 35
4.1 Aluminum Alloy Products Available for Structural Applications ..... 72
4.2 Recommended Aluminum Alloy Filler Metals for Structural Welding of Various Base Aluminum Alloys ..... 73
4.3 Limit of Acceptability and Repair of Cut Edge Discontinuities in Plate ..... 74
4.4 Technique ..... 74
4.5 Maximum Holding Times for Forming and Straightening ..... 75
4.6 Weld Appearance ..... 76
5.1 Hole-Type IQI Requirements. ..... 87
5.2 Wire IQI Requirements. ..... 87
5.3 Maximum Acceptable Discontinuity in Radiographs for Any 3 in [75 mm] Length of Weld (Tubular and Cyclically Loaded Nontubular Connections) ..... 88
6.1 Minimum Required Torque Values and Tension Loads for Welding F-22 Aluminum-Alloy Studs ..... 101
6.2 Stud Alloys for Arc Stud Welding of Various Base Alloys ..... 101
6.3 Stud Alloys for Capacitor Discharge Stud Welding of Various Base Alloys ..... 101
K.1 Typical Current Ranges for Tungsten Electrodes ..... 171
K.2 Typical Chemical Composition of Tungsten Electrodes ..... 172




Copyright American Welding Society
Provided by IHS under license with AWS
No reproduction or networking permitted without license from IHS
Licensee=University of Texas Revised Sub Account/5620001114
Not for Resale, 08/29/2012 23:44:22 MDT

# List of Figures

**Figure** **Page No.**


2.1 Details of Skewed T-Joints ..... 7
2.2 Filler Plates Less Than 1/4 in [6 mm] in Thickness ..... 8
2.3 Filler Plates 1/4 in [6 mm] or More in Thickness. ..... 8
3.1 Positions of Groove Welds ..... 36
3.2 Positions of Fillet Welds ..... 37
3.3 Positions of Test Plates for Groove Welds ..... 38
3.4 Positions of Test Pipes for Groove Welds ..... 39
3.5 Positions of Test Plates for Fillet Welds ..... 40
3.6 Positions of Test Pipes for Fillet Welds ..... 41
3.7 Reduced Section Tension Specimens—Plate and Pipe ..... 42
3.8 Alternate Reduced Section Tension Specimen for Pipe (3 in [75 mm] Diameter or Less) ..... 43
3.9 Full Section Tension Specimens—Small Diameter Pipe (3 in [75 mm] Diameter or Less) ..... 43
3.10 Transverse Side Bend Specimens ..... 44
3.11 Longitudinal Face and Root Bend Specimens ..... 45
3.12 Transverse Face and Root Bend Specimens ..... 46
3.13 Wraparound Guided Bend Jig ..... 47
3.14 Plunger-Type Guided Bend Jig ..... 48
3.15 Roller-Type Guided Bend Jig ..... 50
3.16 Nick-Break Fracture Test Specimen for WPS Qualification of Cast to Cast or Cast to Wrought Alloys ..... 52
3.17 Fillet Weld Soundness Test for WPS Qualification—Option 1—Plate ..... 53
3.18 Fillet Weld Soundness Test for WPS Qualification—Pipe ..... 54
3.19 Fillet Weld Soundness Test for WPS Qualification—Option 2—Root Bend Test— Plate ..... 55
3.20 Location of Test Specimens for WPS Qualification—Plate ..... 56
3.21 Location of Test Specimens for WPS Qualification—Pipe ..... 57
3.22 Location of Test Specimens for WPS Qualification—Box Tubing ..... 57
3.23 Location of Test Specimens for WPS Qualification—Job Size Pipe or Tubing 1/16 in through 3/8 in [2 mm through 10 mm] Wall Thickness ..... 58
3.24 Location of Test Specimens for WPS Qualification—Job Size Pipe or Tubing over 3/8 in [10 mm] Wall Thickness ..... 58
3.25 Performance Qualification in All Positions—Plate Thickness T ≤ 1/8 in [3 mm] ..... 59
3.26 Performance Qualification in All Positions—Plate Thickness T > 1/8 in [3 mm] ..... 59
3.27 Performance Qualification in the Horizontal Position—Plate Thickness T > 1/8 in [3 mm] ..... 60
3.28 Alternative Groove Weld Qualification Test Plate: All Thicknesses ..... 60
3.29 Tubular Groove Weld—Performance Qualification—Without Backing ..... 61
3.30 Tubular Groove Weld—Performance Qualification—Without Backing (Alternative to Figure 3.29) ..... 61
3.31 Tubular Groove Weld—Performance Qualification—With Backing ..... 61
3.32 Fillet Weld or Tack Welder Performance Qualification—Plate ..... 62
3.33 Fillet Weld or Tack Welder Performance Qualification—Pipe or Tubing ..... 62
3.34 Location of Test Specimens on Welded Test Pipe and Box Tubing—Performance Qualification ..... 63
4.1 Edge Discontinuities in Cut Plate ..... 77
4.2 Acceptable and Unacceptable Weld Profiles ..... 78
5.1 Radiographic Identification and Hole-Type or Wire IQI Locations on Approximately Equal Thickness Joints 10 in [250 mm] and Greater in Length ..... 89
5.2 Radiographic Identification and Hole-Type or Wire IQI Locations on Approximately Equal Thickness Joints Less than 10 in [250 mm] in Length ..... 90




Copyright American Welding Society
Provided by IHS under license with AWS
No reproduction or networking permitted without license from IHS
Licensee=University of Texas Revised Sub Account/5620001114
Not for Resale, 08/29/2012 23:44:22 MDT

**Figure** **Page No.**

5.3 Radiographic Identification and Hole-Type or Wire IQI Locations on Transition Joints 10 in [250 mm] and Greater in Length ..... 91
5.4 Radiographic Identification and Hole-Type or Wire IQI Locations on Transition Joints Less Than 10 in [250 mm] in Length ..... 92
5.5 Hole-Type IQI Design ..... 93
5.6 Wire IQI ..... 95
5.7 Radiographic Edge Blocks ..... 96
5.8 Maximum Acceptable Discontinuity RT Images ..... 96
6.1 Stud Weld Bend Jig ..... 102
6.2 Torque Testing Arrangement for Stud Welds ..... 103

*Annexes*
B.1 Recommended CJP Groove Welded Joints ..... 110
B.2 Recommended PJP Groove Welded Joints ..... 130
B.3 PJP Box Connections ..... 141
B.4 PJP—Circular—Tubular Joints for T-, Y-, and K-Connections Made by GTAW and GMAW ..... 142
D.1 Examples of Tubular Connections ..... 146
E.1 Effective Throats of PJP Groove Welds Reinforced with Fillet Welds ..... 149

*Commentary*
C-4.1 Examples of Unacceptable Cutting Beyond the Point of Tangency ..... 188
C-4.2 Permissible Offset in Abutting Members ..... 188
C-4.3 Correction of Misaligned Members ..... 189
C-4.4 Measurement of Flange Warpage and Tilt ..... 189



Copyright American Welding Society
Provided by IHS under license with AWS
No reproduction or networking permitted without license from IHS
Licensee=University of Texas Revised Sub Account/5620001114
Not for Resale, 08/29/2012 23:44:22 MDT

# Structural Welding Code—Aluminum

## 1. General Requirements

### 1.1 Scope

This code contains the requirements for fabricating and erecting welded aluminum structures. When this code is stipulated in the contract documents, conformance with all provisions of the code shall be required, except those provisions that the Engineer or contract documents specifically modifies or specifically exempts.

Safety and health issues and concerns are beyond the scope of this standard and therefore are not fully addressed herein. Safety and health information is available from other sources, including, but not limited to, ANSI Z49.1, *Safety in Welding, Cutting, and Allied Processes*, and applicable federal, state, and local regulations.

**1.1.1 Limitations.** This code is not intended for specialized fabrication such as pressure vessels or pressure piping.

**1.1.2 Alternate Requirements.** Alternate requirements from those in this code shall be submitted to the Engineer for approval. These requirements shall be based on experience, experimental evidence, or engineering analyses, and shall consider materials, loads, and environment.

### 1.2 Approval

All references to the need for approval shall be interpreted to mean approval by the Building Commissioner or the Engineer. Hereinafter, the term *Engineer* shall be used, and is to be construed to mean the Building Commissioner or the Engineer.

### 1.3 Definitions

The welding terms used in this code shall be interpreted in conformance with the definitions given in the latest edition of AWS A3.0, *Standard Welding Terms and Definitions, Including Terms for Adhesive Bonding, Brazing, Soldering, Thermal Cutting, and Thermal Spraying*.

### 1.4 Welding Symbols

Welding symbols shall be those shown in the latest edition of AWS A2.4, *Standard Symbols for Welding, Brazing, and Nondestructive Examination*. Special conditions shall be fully explained by added notes or details.

### 1.5 Safety Precautions

This technical document does not address all welding and health hazards. However, pertinent information can be found in the following documents:

(1) ANSI Z49.1, *Safety in Welding, Cutting, and Allied Processes*

(2) Manufacturer's safety literature on equipment and materials

(3) Other pertinent documents as appropriate.

These documents shall be referred to and followed as required (also see Annex J, Safe Practices).

*NOTE: This code may involve hazardous materials, operations, and equipment. The code does not purport to address all of the safety problems associated with its use. It is the responsibility of the user to establish appropriate safety and health practices. The user should determine the applicability of any regulatory limitations prior to use.*

### 1.6 Standard Units of Measure

This standard makes use of both U.S. Customary Units and the International System of Units (SI). The measurements may not be exact equivalents; therefore, each system shall be used independently of the other without combining in any way. The standard with the designation D1.2:2008 uses U.S. Customary Units. The standard designation D1.2M:2008 uses SI Units. The latter are shown within brackets [ ] or in appropriate columns in tables and figures.

### 1.7 Reference Documents

Annex A contains a list of all documents referenced in this code.



Copyright American Welding Society
Provided by IHS under license with AWS
No reproduction or networking permitted without license from IHS

Licensee=University of Texas Revised Sub Account/5620001114
Not for Resale, 08/29/2012 23:44:22 MDT

This page is intentionally blank.



Copyright American Welding Society
Provided by IHS under license with AWS
No reproduction or networking permitted without license from IHS

Licensee=University of Texas Revised Sub Account/5620001114
Not for Resale, 08/29/2012 23:44:22 MDT

# 2. Design of Welded Connections

## 2.0 Scope

This clause includes requirements for the design of welded connections. This code addresses two types of structures: (1) statically loaded structures, and (2) cyclically loaded structures, i.e., those structures subjected to cyclic loads of sufficient magnitude and frequency to cause the potential for fatigue failure.

This clause recognizes two classes of tubular structures with different workmanship requirements:

(1) Statically loaded tubular structures are Class I structures. Unless otherwise specified, structures of the type identified in *Standard Specifications for Structural Supports for Highway Signs, Luminaries, and Traffic Signals*, published by the American Association of State Highway and Transportation Officials (see Annex A) are Class I structures.

(2) All other tubular structures are Class II structures. Many of the requirements (dimensional and weld quality) are more stringent for Class II structures.

## 2.1 Structural Design

Welds shall be sized for strength requirements using the effective areas defined in Clause 2 of this code in conformance with the *Aluminum Design Manual Specification for Aluminum Structures* unless otherwise required by the contract documents.

## 2.2 Drawings

**2.2.1 Drawing Information.** Complete information regarding location, type, size, and extent of all welds shall be shown on the drawings. The drawings shall distinguish between shop and field welds.

**2.2.2 Joint Welding Sequence.** Drawings of those joints or groups of joints in which it is especially important that the welding sequence and technique be carefully controlled to minimize shrinkage stresses and distortion shall be so noted.

**2.2.3 Weld Size and Length.** Design drawings shall specify the effective weld length and weld size. Shop drawings shall specify the groove depths, "S," applicable for the weld size, "(E)" specified on the design drawings, taking into account the WPS to be used.

**2.2.4 Groove Welds.** Drawings shall clearly indicate by welding symbols or sketches the details of groove welded joints and the preparation of material required to make them. Material, width, thickness, and contour of backing shall be shown.

**2.2.4.1 Symbols.** It is recommended that design drawings show CJP or PJP groove weld requirements without specifying the groove dimensions. The welding symbol without dimensions designates a CJP weld as follows:

(CJP groove weld) 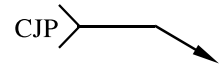


The welding symbol with dimensions above or below the reference line designates a PJP weld, as follows:

(PJP groove weld) 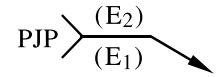


where

$E_2$ = weld size, other side

$E_1$ = weld size, arrow side

**2.2.4.2 Special Details.** When special groove details are required, they shall be detailed on the drawings.

**2.2.5 Special Inspection Requirements.** Special inspection requirements shall be noted on the drawings or in the specification.

--`,,`,`,,,,,,```,,,`,,`,```,,-`-`,,`,,`,`,,`---



Copyright American Welding Society
Provided by IHS under license with AWS
No reproduction or networking permitted without license from IHS

Licensee=University of Texas Revised Sub Account/5620001114
Not for Resale, 08/29/2012 23:44:22 MDT

## 2.3 Groove Welds

**2.3.1 Effective Weld Length.** The effective weld length of a groove weld is the length of the weld perpendicular to the direction of tensile or compressive stress, and shall not exceed the width of the part joined. For groove welds transmitting shear, the effective length is the length specified.

**2.3.2 Weld Size**

**2.3.2.1 CJP Groove Welds.** The weld size of a CJP groove weld shall be the thickness of the thinner part joined.

**2.3.2.2 PJP Groove Welds.** The size of a PJP groove weld made with GMAW or GTAW regardless of the position of welding is the depth of preparation for V- and bevel-joints with an included angle greater than 45° and all U- and J-joints.

**2.3.3 Effective Area.** The effective area is the effective weld length multiplied by the weld size.

**2.3.4 CJP.** The following types of welds are CJP groove welds:

(1) Groove welds welded from both sides with the root of the first weld backgouged to sound metal before welding the second side.

(2) Groove welds welded from one side using permanent or temporary backing.

(3) Groove welds welded from one side using AC-GTAW root pass without backing.

(4) Groove welds welded from one side using PAW-VP in the keyhole mode.

Recommended details of CJP groove welds in butt, corner, and T-joints are given in Annex B1.

**2.3.5 PJP.** Groove welds without backing welded from one side and groove welds welded from both sides but without backgouging are PJP groove welds, except as noted in 2.3.4.

Recommended details of PJP groove welds for butt, corner, and T-joints are given in Annex B2.

## 2.4 Fillet Welds

**2.4.1 Effective Throat.** The effective throat is the shortest distance from the joint root to the face of the diagrammatic weld (see Annex E).

**2.4.2 Length**

**2.4.2.1 Effective Length (Straight).** The effective length of a straight fillet weld is the overall length of the full-size fillet, including boxing. No reduction in effective length shall be required for the start or stop crater of the weld.

**2.4.2.2 Effective Length (Curved).** The effective length of a curved fillet is measured along the centerline of the effective throat. If the weld area of a fillet weld in a hole or slot calculated from this length is greater than the area calculated from 2.5.1, then this latter area shall be used as the effective area of the fillet.

**2.4.2.3 Minimum Length.** The minimum effective length of a fillet weld shall be at least four times its nominal size, or the weld size shall be considered not to exceed 25% its effective length.

**2.4.2.4 Minimum Length of Intermittent Fillets.** The minimum length of an intermittent fillet weld shall be 1-1/2 in [40 mm].

**2.4.3 Effective Area.** The effective area is the effective weld length multiplied by the effective throat. Stress on a fillet weld shall be considered to be shear on this effective area for any direction of applied load.

**2.4.4 Lap Joints**

**2.4.4.1 Double Fillet Welds.** Unless lateral deflection of the parts is prevented, they shall be connected by at least two transverse lines of fillet, plug, or slot welds, or by two or more longitudinal fillet or slot welds.

**2.4.4.2 Minimum Overlap.** The minimum overlap of parts in stress-carrying lap joints shall be five times the thickness of the thinner part, but not less than 1 in [25 mm].

**2.4.4.3 Fillet Welds in Holes or Slots.** Minimum spacing and dimensions of holes or slots when fillet welding is used shall conform to 2.5. Fillet welds in holes or slots in lap joints may be used to transfer shear or to prevent buckling or separation of lapped parts. These fillet welds may overlap, subject to the requirements of 2.4.4.2. Fillet welds in holes or slots shall not be considered plug or slot welds.

**2.4.4.4 Maximum Size for Lap Joints.** The maximum fillet weld size for a lap joint detailed along edges of material shall be:

(1) The thickness of the base metal, for metal less than 1/4 in [6 mm] thick.

(2) 1/16 in [2 mm] less than the thickness of the base metal, for metal 1/4 in [6 mm] or more in thickness, unless the weld is designated on the drawing to be built out to obtain full throat thickness. The distance between the edge of the base metal and the toe of the weld may be less than 1/16 in [2 mm] provided the weld size is verifiable.



Copyright American Welding Society
Provided by IHS under license with AWS
No reproduction or networking permitted without license from IHS
Licensee=University of Texas Revised Sub Account/5620001114
Not for Resale, 08/29/2012 23:44:22 MDT

**2.4.5 Fillets in Skewed T-Joints.** Fillet welds may be used in skewed T-joints with a dihedral angle between 60° and 135°, inclusive (see Figure 2.1, Details A and B).

## 2.5 Plug and Slot Welds

**2.5.1 Effective Area.** The effective area is the nominal area of the hole or slot in the plane of the faying surface.

**2.5.2 Fill Depth.** The fill depth of plug or slot welds in metal 5/8 in [16 mm] thick or less shall be the thickness of the metal. In metal over 5/8 in [16 mm] in thickness, it shall be at least one-half the thickness of the metal, but not less than 5/8 in [16 mm] except for M27 alloys where the fill depth shall be the thickness of the metal.

**2.5.3 Minimum Plug Hole Diameter.** The minimum diameter of the hole for a plug weld shall be as described in Table 2.1.

**2.5.4 Minimum Spacing (Plug Welds).** The minimum center-to-center spacing of plug welds shall be four times the diameter of the hole.

**2.5.5 Maximum Slot Length.** The length of the slot for a slot weld shall not exceed ten times the thickness of the base metal.

**2.5.6 Minimum Slot Width.** The minimum width of the slot shall be as shown in Table 2.1.

**2.5.7 Minimum Spacing (Slot Welds).** The minimum spacing of slot centerlines in a direction perpendicular to their length shall be four times the slot width. The minimum center-to-center spacing in a longitudinal direction shall be two times the length of the slot.

**2.5.8 Slot Ends.** The ends of a slot shall be semicircular or shall have the corners rounded to a radius not less than the thickness of the part containing the slot, except those ends which extend to the edge of the part.

## 2.6 Filler Plates

**2.6.1 Where Allowed.** Filler plates may be used in:

(1) Welding parts of different thicknesses

(2) Connections that, due to existing geometric alignment, accommodate offsets to allow simple framing

**2.6.2 Filler Plates Less Than 1/4 in [6 mm] Thick** (see Figure 2.2). Filler plates less than 1/4 in [6 mm] thick shall not be used to transfer stress and shall be kept flush with the welded edges of the stress-carrying part. The weld (2) size along such edges shall be increased over the size required for strength by an amount equal to the thickness of the filler plate.

**2.6.3 Filler Plates 1/4 in [6 mm] Thick or Thicker** (see Figure 2.3). Filler plates 1/4 in [6 mm] or more in thickness shall extend beyond the edges of the part carrying load across the joint. Such filler plates shall be welded (3) to the part on which they are fitted and this weld shall have sufficient strength to transmit the eccentric load. The welds (2) joining the part carrying load through the joint to the filler plate shall be sufficient to transmit the load on the parts being joined and long enough to avoid overstressing the filler plate.



Copyright American Welding Society
Provided by IHS under license with AWS
No reproduction or networking permitted without license from IHS
Licensee=University of Texas Revised Sub Account/5620001114
Not for Resale, 08/29/2012 23:44:22 MDT

**Table 2.1**
**Minimum Diameter of Hole for Plug Welds or Width of Slot for Slot Welds (see 2.5.3 and 2.5.6)**

| Material Thickness T | Minimum Hole Diameter or Slot Width |
|---|---|
| Less than 1/8 in [3 mm] | 3T |
| 1/8 in [3 mm] or greater | 2.5T |



--`,,`,,`,,,,,```,,,``,,`,```,,=`=`,,`,`,,`---
Copyright American Welding Society
Provided by IHS under license with AWS
No reproduction or networking permitted without license from IHS
Licensee=University of Texas Revised Sub Account/5620001114
Not for Resale, 08/29/2012 23:44:22 MDT

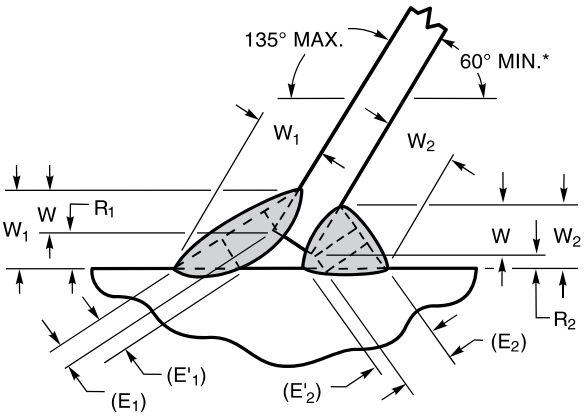


**(A)**

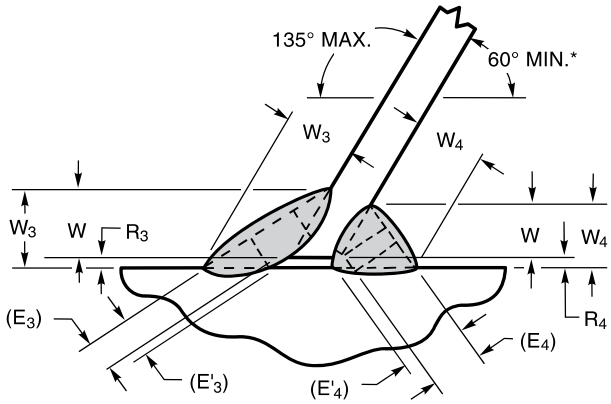


**(B)**

$W'_n$ = fillet weld size if root opening ≤1/16 in [2 mm]
$W_n$ = fillet weld size if root opening >1/16 in [2 mm]
$E'_n$ = effective throat if root opening ≤1/16 in [2 mm]
$E_n$ = effective throat if root opening >1/16 in [2 mm]
$R_n$ = root opening

where n = 1, 2, 3, or 4

*Angles smaller than 60° are allowed; however, in such cases, the weld shall be considered to be a PJP groove weld.

**Figure 2.1—Details of Skewed T-Joints (see 2.4.5)**



Copyright American Welding Society
Provided by IHS under license with AWS
No reproduction or networking permitted without license from IHS
Licensee=University of Texas Revised Sub Account/5620001114
Not for Resale, 08/29/2012 23:44:22 MDT

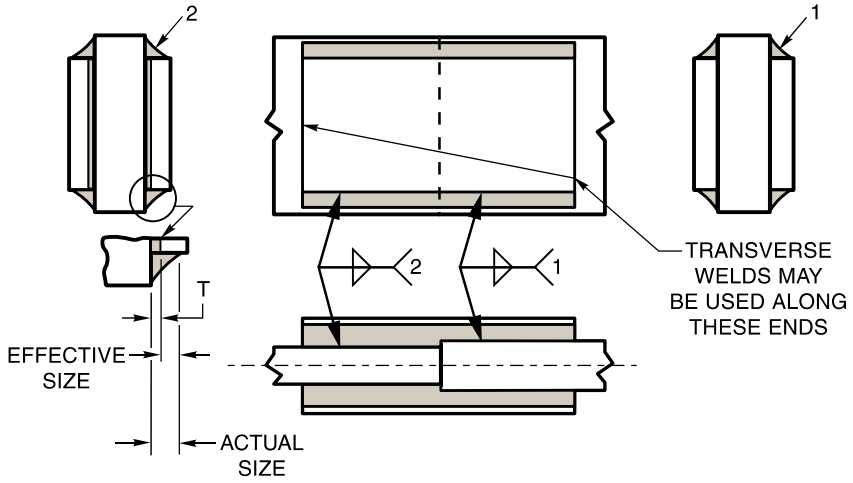


Note: The effective area of weld 2 shall equal that of weld 1, but its size shall be its effective size plus the thickness of the filler plate T.

**Figure 2.2—Filler Plates Less Than 1/4 in [6 mm] in Thickness (see 2.6.2)**

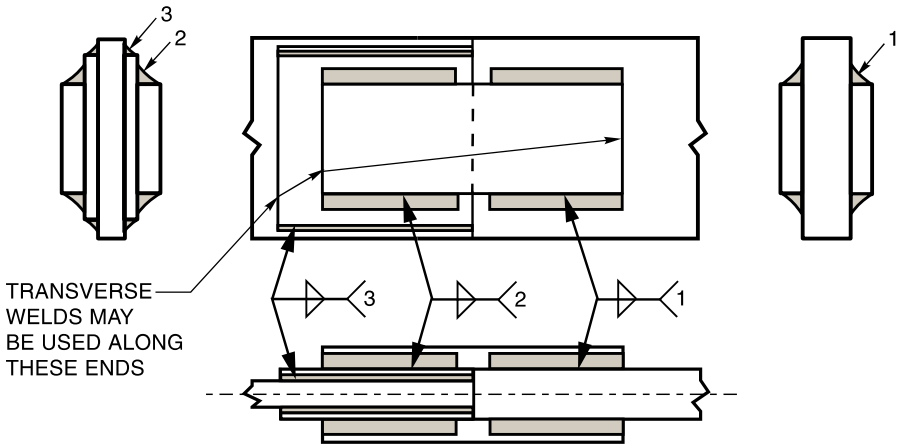


Notes:
1. The effective area of weld 2 shall equal that of weld 1. The length of weld 3 shall be sufficient to avoid overstressing the filler plate along the toe of the weld.
2. The effective area of weld 3 shall be at least equal that of weld 1 and there shall be no overstress of the ends of weld 3 resulting from the eccentricity of the forces acting on the filler plates.

**Figure 2.3—Filler Plates 1/4 in [6 mm] or More in Thickness (see 2.6.3)**



Copyright American Welding Society
Provided by IHS under license with AWS
No reproduction or networking permitted without license from IHS
Licensee=University of Texas Revised Sub Account/5620001114
Not for Resale, 08/29/2012 23:44:22 MDT

# 3. Qualification

## *Part A*
## *General Requirements*

## 3.1 General

The qualification requirement of this code is to assure that the fabrication procedures actually used in production meet a recognized standard with an objective of producing consistent product quality. To accomplish this objective, each Contractor, fabricator, or manufacturer shall, prior to the start of production, perform the following:

(1) Qualify and record the essential variables for a PQR (Procedure Qualification Record) to be used to define a WPS (Welding Procedure Specification) in conformance with Part C of this clause using material, equipment, cleaning and preparation methods, welding conditions, etc., that will be contained in the WPS.

(2) Prepare a written WPS in conformance with 3.12.2 (see Annex F).

(3) Qualify the welders, welding operators and tack welders in conformance with Part D of this clause.

(4) Conduct the tests required by this code to qualify the WPSs and the welders, welding operators, and tack welders who will apply these WPSs.

(5) Certify and maintain records of all tests and WPSs on forms as shown in Annex F or similar, and make available such records to those authorized to examine them.

(6) Supply the written WPSs to all welders, welding operators, tack welders, and quality control personnel engaged in the work.

The Engineer may accept properly documented evidence of previous qualification of the WPSs to be employed as well as properly documented welder performance qualifications.

## 3.2 Qualification of WPSs

Only WPSs with previous qualifications accepted by the Engineer or qualified in conformance with Part C of this clause shall be recognized as approved WPSs. AWS B2.1-X-XXX Series on Standard Welding Procedure Specifications, may, in this manner, be accepted for use in this code. When welding joints are made between two base metals that have different M numbers, a procedure qualification test shall be required for the applicable combination of M numbers, whether or not qualification tests have been made for each of the two base metals welded to themselves.

**3.2.1 Group Designations.** Base metals are grouped to reduce the number of WPSs as follows:

| Group Designation | Aluminum Association Alloy Classification |
|---|---|
| M21 | 1060, 1100, 3003, Alclad 3003, 5005, 5050 |
| M22 | 3004, Alclad 3004, 5052, 5154, 5254, 5454, 5652 |
| M23 | 6005, 6005A, 6061, Alclad 6061, 6063, 6082, 6351 |
| M24 | 2219 |
| M25 | 5083, 5086, 5456 |
| M26 | A201.0, 354.0, C355.0, 356.0, A356.0, 357.0, A357.0, 359.0, 443.0, A444.0, 514.0, 535.0 |
| M27 | 7005 |

**3.2.2 Unlisted Material.** When an alloy not listed in Table 4.1 is approved under the provisions of the contract documents the WPS shall be qualified by the Contractor in conformance with Clause 3.



Copyright American Welding Society
Provided by IHS under license with AWS
No reproduction or networking permitted without license from IHS
Licensee=University of Texas Revised Sub Account/5620001114
Not for Resale, 08/29/2012 23:44:22 MDT

## 3.3 Qualification of Welders, Welding Operators, and Tack Welders

**3.3.1** Welders, welding operators, and tack welders to be employed on work under this code shall be qualified in conformance with Part D of this clause, or other qualification as approved by the Engineer. Welders and welding operators qualified by standard test to AWS B2.1, *Standard for Welding Procedure and Performance Qualification*, may, in this manner, be accepted for use in this code.

**3.3.2** The welder's, welding operator's, or tack welder's qualification, as specified in Clause 3, Part D, shall be considered as remaining in effect indefinitely unless (1) the person is not engaged in a given process of welding for which that person is qualified for a period exceeding six months, or (2) there is reason to question the individual's ability.

## 3.4 Position of Test Welds

**3.4.1** Each WPS shall be qualified by positioning and welding the test assembly in the manner stated below and as shown in Figures 3.1 through 3.6 for the position for which it is to be qualified. These positions are classified as: (1) flat, (2) horizontal, (3) vertical, or (4) overhead in conformance with Figures 3.1 and 3.2.

**3.4.1.1 Groove Welds—Plate** (see Figure 3.3). In making the tests to qualify groove welds, test plates shall be welded in the following positions:

(1) Position 1G (Flat)—The test plates shall be placed in an approximately horizontal plane and the weld metal deposited from the upper side [see Figure 3.3(A)].

(2) Position 2G (Horizontal)—The test plates shall be placed in an approximately vertical plane with the groove approximately horizontal [see Figure 3.3(B)].

(3) Position 3G (Vertical)—The test plates shall be placed in an approximately vertical plane with the groove approximately vertical [see Figure 3.3(C)].

(4) Position 4G (Overhead)—The test plates shall be placed in an approximately horizontal plane and the weld metal deposited from the under side [see Figure 3.3(D)].

**3.4.1.2 Groove Welds—Pipe** (see Figure 3.4). The term *pipe* as used herein shall include all tubular shapes. In making the tests to qualify groove welds, the test pipe shall be welded in the following positions:

(1) Position 1G (Pipe Horizontal-Rotated)—The test pipe shall be placed with its axis approximately horizontal and the groove approximately vertical. The pipe shall be rotated during welding so the weld metal is deposited from the upper side [see Figure 3.4(A)].

(2) Position 2G (Pipe Vertical-Fixed)—The test pipe shall be placed with its axis approximately vertical and the groove approximately horizontal. The pipe shall not be rotated during welding [see Figure 3.4(B)].

(3) Position 5G (Pipe Horizontal-Fixed)—The test pipe shall be placed with its axis approximately horizontal and the groove approximately vertical. The pipes shall not be rotated during welding [see Figure 3.4(C)].

(4) Position 6G (Pipe Inclined-Fixed)—The test pipe shall be inclined at approximately 45° with the horizontal. The pipe shall not be rotated during welding [see Figure 3.4(D)].

**3.4.1.3 Fillet Welds—Plate** (see Figure 3.5). In making the tests to qualify welds on plate, test plates shall be welded in the positions outlined below:

(1) Position 1F (Flat)—The test plates shall be so placed that each fillet weld is deposited with its axis approximately horizontal and its throat approximately vertical [see Figure 3.5(A)].

(2) Position 2F (Horizontal)—The test plates shall be so placed that each fillet weld is deposited on the upper side of a horizontal surface and against a vertical surface [see Figure 3.5(B)].

(3) Position 3F (Vertical)—The test plates shall be placed in approximately vertical planes, and each fillet weld deposited on vertical surfaces [see Figure 3.5(C)].

(4) Position 4F (Overhead)—The test plates shall be so placed that each fillet weld is deposited on the under side of a horizontal surface and against a vertical surface [see Figure 3.5(D)].

**3.4.1.4 Fillet Welds—Pipe** (see Figure 3.6). In making the tests to qualify fillet welds on pipe, the test pipe shall be welded in the positions outlined below:

(1) Position 1F (Pipe Inclined-Rotated)—The test pipe shall be placed with its axis at approximately 45° and rotated during welding so that the filler metal is deposited in the flat position [see Figure 3.6(A)].

(2) Position 2F (Pipe Vertical-Fixed)—The test pipe shall be placed with its axis approximately vertical. The filler metal shall be placed on the outer surface of the pipe at its juncture with the abutting plate or pipe. The assembly shall not be rotated during welding [see Figure 3.6(B)].

(3) Position 2FR (Pipe Horizontal-Rotated)—The test pipe shall be placed with its axis approximately hori-



Copyright American Welding Society
Provided by IHS under license with AWS
No reproduction or networking permitted without license from IHS
Licensee=University of Texas Revised Sub Account/5620001114
Not for Resale, 08/29/2012 23:44:22 MDT

zontal and rotated during welding so that filler metal is deposited in the horizontal position [see Figure 3.6(C)].

(4) Position 4F (Overhead-Fixed)—The test pipe shall be placed with its axis approximately vertical. The filler metal shall be placed against the outer surface of the pipe at its juncture with the abutting plate or pipe. The assembly shall not be rotated during welding [see Figure 3.6(D)].

(5) Position 5F (Pipe Horizontal-Fixed)—The test pipe shall be placed with its axis approximately horizontal and with the welding joint vertical. The assembly shall not be rotated during welding [see Figure 3.6(E)].

# *Part B*
# *Types of Tests, Test Methods, and Acceptance Criteria*

## 3.5 Types and Purposes of Tests

The tests described in Part B (Clauses 3.5 through 3.11) are intended to determine the strength or degree of soundness of welds made in conformance with the WPS or the soundness of welds made by a welder, welding operator, or tack welder.

The provisions of AWS B4.0, *Standard Methods for Mechanical Testing of Welds*, may be used for the testing of welds made for WPS or performance qualification. However, in instances where the provisions of AWS B4.0 and AWS D1.2/D1.2M are in conflict, AWS D1.2/D1.2M shall take precedence.

**3.5.1** Visual examination is required for WPS qualification and performance qualification.

**3.5.2 Mechanical Tests**

**3.5.2.1** Tension tests for strength of groove welds shall be required for WPS qualification.

**3.5.2.2** Bend tests for soundness and ductility of groove welds are required for WPS qualification and performance qualification, except as allowed in 3.5.3.

**3.5.2.3** Nick-break fracture tests are required to determine soundness of groove welds containing castings for WPS qualification as described in 3.9.1.

**3.5.2.4** To determine the soundness of fillet welds for performance qualification, a fillet weld fracture test shall be required. For WPS qualification, a fracture test or a fillet weld bend test may be used to determine soundness.

**3.5.3** RT may be used in lieu of bend tests for performance qualification of groove joints in wrought materials. The RT procedure technique and acceptance criteria shall be in conformance with the requirements of Clause 5, Part B and Part D, respectively, of this code.

## 3.6 Visual Examination

**3.6.1 Examination Procedure.** Visual inspection of the weld surface shall be performed on the test weldment prior to cutting any mechanical test specimens, except that macroetching of cut sections is included in the examination of fillet welds and PJP groove welds. Liquid penetrants, magnifying lenses, scales or templates may be used as aids in determining whether the sample weldment passes the criteria described in 3.6.2 or 3.6.3.

**3.6.1.1** For detecting discontinuities that are open to the surface, PT may be used. The methods set forth in ASTM E 165, *Standard Recommended Practice for Liquid Penetrant Inspection Method*, shall be used, and the standards of acceptance shall be in conformance with 5.14.

**3.6.1.2** The macroetched specimen for the fillet weld test assembly or the PJP groove weld test assembly shall be taken from the end of the sample weldment. The macroetch specimens for fillet welded pipe or tubing welded assemblies shall be taken by sectioning longitudinally through the center of the pipe or tubing. One cut face of the specimen shall be smoothed and etched with a suitable etchant to give a clear definition of the weld metal and HAZ. Etching solutions, procedures, and safety requirements are given in Annex H.

**3.6.2 Acceptance Criteria—Visual Examination—Groove Welds, Plate and Pipe** (see Figure 4.2). The visual examination of the test weldment shall satisfy the following acceptance criteria:

(1) Both the face and root surfaces shall be free of cracks.

(2) All craters shall be filled to the full cross section of the weld.

(3) The edges of the weld shall blend smoothly with the base metal.

(4) Undercut shall not exceed 0.01 in [0.25 mm].

(5) The root shall show (a) complete fusion for CJP groove welds, or (b) penetration equal to or greater than the weld size specified for PJP groove welds.

(6) The maximum melt-through on groove welds in pipe or tubing shall not exceed 1/8 in [3 mm].



Copyright American Welding Society
Provided by IHS under license with AWS
No reproduction or networking permitted without license from IHS
Licensee=University of Texas Revised Sub Account/5620001114
Not for Resale, 08/29/2012 23:44:22 MDT

(7) The root concavity shall not exceed 1/16 in [2 mm].

(8) Total weld thickness shall be equal to or greater than the thickness of the base metal, but the weld reinforcement shall not exceed the value listed in Figure 4.2(D) or (E).

**3.6.3 Acceptance Criteria—Visual Examination of Fillet Welds for Plate or Pipe** (see Figure 4.2). The visual examination of the test weldment shall satisfy the following acceptance criteria:

(1) The surface of the weld shall be free from cracks.

(2) All craters shall be filled to the full cross section of the weld.

(3) The edges of the weld shall blend smoothly with the base metal.

(4) Undercut shall not exceed 0.01 in [0.25 mm].

(5) The leg lengths shall meet the requirements of the WPS.

(6) The weld shall exhibit complete fusion in the root and to the base metal by the macroetch test.

(7) Root surface concavity (suck-back) shall not exceed 1/32 in [1 mm].

## 3.7 Tension Tests—Groove Welds

**3.7.1 Specimens.** Tension test specimens shall conform to one of the types illustrated in Figure 3.7, 3.8, or 3.9.

**3.7.1.1 Reduced Section Test Specimens—Plate.** Reduced section specimens from plate conforming to the requirements given in Figure 3.7 shall be used for tension tests on all thicknesses of plate.

(1) A single specimen of full plate thickness shall be used for thicknesses up to and including 1 in [25 mm].

(2) For plate thicknesses greater than 1 in [25 mm], single or multiple specimens may be used.

(3) When multiple specimens are necessary because of the limitations of the testing equipment, the entire thickness shall be cut mechanically into the minimum number of approximately equal slices of a thickness than can be tested in the available equipment. Each specimen (slice) shall be tested, and collectively, shall represent a single required tension test.

**3.7.1.2 Reduced Section Test Specimens—Pipe**

(1) For pipe having an outside diameter greater than 3 in [75 mm], reduced section specimens conforming to the requirements given in Figure 3.7 shall be used for tension tests on all thicknesses.

(a) A single specimen of the full thickness shall be used for thicknesses up to and including 1 in [25 mm].

(b) For thicknesses greater than 1 in [25 mm], single or multiple specimens may be used.

(c) When multiple specimens are necessary because of the limitations of the testing equipment, the entire thickness shall be cut mechanically into the minimum number of approximately equal sizes of a thickness that can be tested in the available equipment. Each specimen (slice) shall be tested, and collectively shall represent a single required tension test.

(2) For pipe having an outside diameter of 3 in [75 mm] or less, test specimens conforming to the requirements given in Figure 3.8 may be used for tension tests.

**3.7.1.3 Full-Section Pipe.** For pipe having an outside diameter of 3 in [75 mm] or less, full-section specimens conforming to the requirements given in Figure 3.9 may be used for tension tests.

**3.7.1.4 PJP Groove Welds—Plate and Pipe.** For PJP groove welds in plate and pipe, the excess material on the root side of the joint shall be removed by machining to the thickness of the weld size.

**3.7.2 Tension Test Procedure.** Each tension test specimen shall be ruptured under tensile load, and the maximum load shall be determined. The tensile strength shall be computed by dividing the maximum load by the least cross-sectional area of the specimen as determined from measurements made before the load was applied.

**3.7.3 Acceptance Criteria—Tension Tests—Plate and Pipe**

**3.7.3.1** The tensile strength shall be no less than the applicable requirement in Table 3.2. When multiple specimens are used, as allowed in 3.7.1.1 and 3.7.1.2, each specimen (slice) shall meet the applicable requirement.

**3.7.3.2** If base metals of different tensile strengths are used, the specified minimum tensile strength of the lower strength base metal, as shown in Table 3.2, applies.

## 3.8 Bend Tests—Groove Welds—Plate and Pipe

**3.8.1 Specimens.** Bend specimens are of five types, depending on whether the axis of the weld is transverse or parallel to the longitudinal axis of the specimen and which surface (side, face, or root) is on the convex (outer) side of the bent specimen. Longitudinal bend



Copyright American Welding Society
Provided by IHS under license with AWS
No reproduction or networking permitted without license from IHS
Licensee=University of Texas Revised Sub Account/5620001114
Not for Resale, 08/29/2012 23:44:22 MDT

specimens may be used in lieu of transverse bend specimens for testing combinations of base and filler materials which differ markedly in bending properties. Bend test specimens shall conform to one of the types shown in Figure 3.10, 3.11, or 3.12. The cut surfaces shall be designated the sides of the specimen. The original surfaces of the specimen shall be called the face and root surfaces, the face surface having the greater width of weld.

**3.8.1.1 Transverse Side Bend Specimen.** The weld is transverse to the longitudinal axis of the specimen which is bent so that the side surface with the larger discontinuity, if any, becomes the convex surface of the bent specimen. Transverse side bend specimens shall conform to the dimensions shown in Figure 3.10. Specimens of base-metal thickness greater than 1-1/2 in [40 mm] may be bent full width or cut into strips of approximately equal width. The weld root shall be contained in one of the test strips. Each specimen (strip) shall be tested and, collectively, shall represent a single, required bend test.

**3.8.1.2 Transverse Face Bend Specimen.** Transverse face bend test specimens shall conform to the dimensions shown in Figure 3.12 and are bent so that the face surface becomes the convex surface of the bent specimen. Pipe less than or equal to 4 in [100 mm] in diameter shall have face bend specimens prepared as described in 3.8.1.4.

**3.8.1.3 Transverse Root Bend Specimen.** Transverse root bend test specimens shall conform to the dimensions shown in Figure 3.12 and are bent so that the root surface becomes the convex surface of the bent specimen. Pipe less than or equal to 4 in [100 mm] in diameter shall have root bend specimens prepared as described in 3.8.1.4. For PJP groove welds, the specimen shall be machined so that the thickness of the specimen equals the weld size.

**3.8.1.4 Subsize Transverse Face and Root Bend Specimen.** For pipe 4 in [100 mm] or less in outside diameter, the width of the specimen may be 3/4 in [20 mm], measured around the outside surface. Alternatively, for pipe less than 2-3/8 in [60 mm] in outside diameter, the width of the specimen may be that obtained by cutting the pipe into quarter sections, less the allowance for cutting. The other dimensions shall be as in Figure 3.12.

**3.8.1.5 Longitudinal Face Bend Specimen.** The weld is parallel to the longitudinal axis of the specimen which is bent so that the face surface becomes the convex surface of the bent specimen. Longitudinal face bend test specimens shall conform to the dimensions in Figure 3.11.

**3.8.1.6 Longitudinal Root Bend Specimen.** The weld is parallel to the longitudinal axis of the specimen which is bent so that the root surface becomes the convex surface of the bent specimen. Longitudinal root bend test specimens shall conform to the dimensions in Figure 3.11. For PJP groove welds, the specimen shall be machined so that the thickness of the specimen equals the weld size.

**3.8.1.7 Special Bending Conditions—M23, M24, M27 Base Metals, and F23 Filler Metals.** Welds on M23 base metals may be bend tested under either of two conditions, as-welded or annealed. In the as-welded condition, the 1/8 in [3 mm] specimen shall be bent over a diameter of 2-1/16 in [52 mm]. Specimens of less than 1/8 in [3 mm] shall be bent over a diameter of 16-1/2t. Annealed specimens of M23 shall be bent over a 6-2/3t diameter. Annealing practice: Hold 2–3 h at 775°F [410°C] and cool at 50°F/h [28°C/h] to 500°F [260°C]. The rate of cooling below 500°F [260°C] is unimportant.

Welds made with M24 material shall be annealed and bent over an 8t diameter.

Welds made with M27 material shall be bend tested within two weeks of welding.

Welds made with F23 filler metal on any M21, M22, or M23 base metal shall be bent in the same manner as M23 material.

**3.8.2 Test Procedures—Bend Tests—Plate and Pipe.** Bend test specimens shall be bent in a test jig that is in substantial conformance with Figure 3.13, 3.14, or 3.15.

**3.8.2.1 Wraparound Jig.** When a jig of the wraparound type (see Figure 3.13) is used, the face surface of the specimen is turned toward the outer roller for face bend tests, the root surface for root bend tests, and the side with the larger discontinuity, if any, for side bend tests. The specimen shall be wrapped around the center roller by a 180° movement of the outer roller.

**3.8.2.2 Plunger Jig.** When a plunger-type jig (see Figure 3.14 or 3.15) is used, the face surface of the specimen shall be turned toward the gap of the jig for face bend tests, the root surface for root bend tests, and the side with the larger discontinuity, if any, for side bend tests. The specimen shall be centered on the jig and forced into the gap by applying a load to the plunger. With jigs of the type in Figure 3.14, the final position of the specimen is such that a 1/8 in [3 mm] diameter wire cannot be inserted between the specimen and die. With jigs of the type in Figure 3.15, the specimen shall be ejected from the bottom.



Copyright American Welding Society
Provided by IHS under license with AWS
No reproduction or networking permitted without license from IHS
Licensee=University of Texas Revised Sub Account/5620001114
Not for Resale, 08/29/2012 23:44:22 MDT

**3.8.2.3 Wide Specimens.** Where specimens wider than 1-1/2 in [40 mm] are to be bent, the test jig mandrel shall be at least 1/4 in [6 mm] wider than the specimen.

**3.8.3 Acceptance Criteria—Bend Tests—Pipe and Plate**

**3.8.3.1** The weld and HAZ of a transverse weld bend specimen shall be completely within the bent portion of the specimen after bending.

**3.8.3.2** The convex surface of the bend test specimen shall be visually examined for surface discontinuities. For acceptance, the surface shall not contain any discontinuities exceeding the following dimensions:

(1) 1/8 in [3 mm] measured in any direction on the surface.

(2) 3/8 in [10 mm]—for the sum of the greatest dimensions of all discontinuities exceeding 1/32 in [1 mm], but less than or equal to 1/8 in [3 mm]. This is based on a 1-1/2 in [40 mm] specimen width. For other specimen widths, a proportional sum of the greatest dimensions shall apply.

(3) 1/4 in [6 mm]—Maximum for a corner crack, except when that corner crack resulted from a visible inclusion or other fusion-type discontinuities, then the 1/8 in [3 mm] maximum shall apply.

(4) Specimens with corner cracks exceeding 1/4 in [6 mm], with no evidence of inclusions or other fusion-type discontinuities, may be disregarded and a replacement test specimen from the original weldment shall be tested.

## 3.9 Soundness Tests—Groove Welds in Castings

**3.9.1 Specimens.** Nick-break fracture test specimens shall be removed from CJP groove welds of 3/16 in [5 mm] and thicker. They shall to conform to Figure 3.16. For plate welds the specimens shall be removed from locations specified for face bend specimens in Figure 3.20(A) or the center side bend specimens in Figure 3.19. For pipe welds, the specimens shall be removed adjacent to the tension specimens and 180° apart (see Figures 3.21, 3.22, 3.23, and 3.24).

The notched specimen shall be broken by fixing one leg of the specimen in a vise and applying a force to fracture the specimen in the notched area. The exposed edges of the fracture shall be visually examined.

**3.9.2 Groove Weld Soundness—Acceptance Criteria.** The fractured surface shall show complete fusion of the joint and shall exhibit no inclusion or porosity larger than 1/8 in [3 mm] in the greatest dimension for 1/4 in [6 mm] thickness and greater. Also the sum of the greatest dimensions of all inclusions and porosity shall not exceed 1/2 in [12 mm] in each 2 in [50 mm] segment.

For material thinner than 1/4 in [6 mm] the fractured surface of the tension specimen shall be visually examined. The surface shall exhibit no discontinuity greater than one half the base-metal thickness and the sum of the greatest dimensions shall be proportionally less than allowed for the 1/4 in [6 mm] material.

## 3.10 Soundness Tests—Fillet Welds

**3.10.1 Specimens**

**3.10.1.1 Option 1—Fillet Weld Fracture Test—Pipe and Plate.** The dimensions and preparation of fillet weld test weldments shall conform to Figure 3.17 or 3.18. The test weldment for plate (see Figure 3.17) shall be cut to provide two 4 in [100 mm] center sections. The ends shall be retained for macroetch specimens. The test weldment for pipe (see Figure 3.18) shall be cut into eight sections, transverse to the welds.

**3.10.1.2 Option 2—Fillet Weld Root Bend Test—Plate.** The dimensions and preparation of the fillet weld test specimens shall conform to the requirements in Figure 3.19. The backing material and reinforcement shall be removed flush with the base metal.

All M23 materials and all materials welded with F23 filler metals shall have the face side removed to provide a 1/8 in [3 mm] thick bend specimen as shown in Figure 3.12 except as described in 3.8.1.7.

**3.10.2 Fillet Weld Soundness—Test Procedures**

**3.10.2.1 Option 1—Fracture Test—Pipe and Plate.** The specimen load shall be increased steadily or applied by repeated blows until it breaks or folds flat on itself.

**3.10.2.2 Option 2—Root Bend Test—Plate.** The specimen shall be loaded in such a way that the root of the weld becomes the convex surface of the bent specimen. The testing procedure for fillet weld root bend specimens shall be the same as for groove welds in 3.8.2.

**3.10.3 Fillet Weld Soundness—Acceptance Criteria**

**3.10.3.1 Option 1—Fracture Test—Pipe and Plate.** If the specimen folds flat on itself, the specimen shall have satisfactorily passed the test. If the specimen fractures, the broken surface shall be examined visually. To pass, it shall show complete fusion to the root of the joint, and shall exhibit no inclusion or porosity larger than 3/32 in [2 mm] in the greatest dimension. The sum of the greatest dimensions of all inclusions and porosity



Copyright American Welding Society
Provided by IHS under license with AWS
No reproduction or networking permitted without license from IHS
Licensee=University of Texas Revised Sub Account/5620001114
Not for Resale, 08/29/2012 23:44:22 MDT

shall not exceed 3/4 in [20 mm] in each 4 in [100 mm] segment.

**3.10.3.2 Option 2—Root Bend Test—Plate.** The specimen shall conform to the root bend criteria for groove welds (see 3.8.3.2).

## 3.11 Radiographic Examination

(RT shall be optional for performance qualification of groove welds.)

**3.11.1 Examination Procedure.** The RT procedure and technique shall conform to Clause 5, Part B. Exclude 1-1/4 in [32 mm] at each end of the weld from evaluation in the plate test. Welded test pipe or tubing 4 in [100 mm] in diameter or larger shall be examined for a minimum of one-half of the weld perimeter selected to include a sample of all positions welded. (For example, a test pipe or tube welded in the 5G or 6G position shall be radiographed from the top centerline to the bottom centerline on either side.) Welded test pipe or tubing less than 4 in [100 mm] in diameter shall require 100% RT.

**3.11.2 Radiographic Examination—Acceptance Criteria.** When the RT option is used for performance qualification, the acceptability shall be based on 5.15.1 and 5.15.2, as applicable.

# *Part C*
# *WPS Qualification*

## 3.12 General

WPS qualification shall be conducted by the Contractor, fabricator or manufacturer. The WPS qualification tests required in Part C are devised to determine the strength and degree of soundness of welds made by a specific WPS. Results of these tests are used to establish proper welding variables and define the limitations of essential variables applicable to production welding under this code.

**3.12.1 Procedure Qualification Record (PQR).** The specific values of conditions involved in qualifying a WPS shall be recorded in a form called the Procedure Qualification Record (PQR). On this form shall be recorded the essential variables for the specific welding process (see Annex F for sample PQR).

**3.12.2 WPS.** The WPS shall list in detail the group numbers of the base metals to be joined, the filler metal(s) to be used, the range of preheat and postweld heat treatments, thicknesses, and other variables associated with the welding process (see Annex F for sample WPS).

**3.12.3 Combination of WPSs.** More than one WPS may be used in a single production joint, provided each WPS is qualified either separately or in combination with the other WPS(s) within the thickness limits in Table 3.4 or 3.5, as applicable, for each of the WPSs.

## 3.13 Limits of Qualified Positions for WPSs

To reduce the number of WPS qualifications that may be required, qualification in certain positions also qualifies for other conditions as described in Table 3.3.

## 3.14 Limitation of Essential Variables—WPS Qualification

Changes greater than the limits set in Table 3.1 shall be considered essential changes in a WPS (see Annex F) and shall require qualification of the altered WPS.

## 3.15 Tests—WPS Qualification

**3.15.1** The following are required tests for groove welds:

(1) Visual examination (see 3.6).

(2) Macroetch test for soundness and weld size in PJP groove welds (see 3.6.1.2).

(3) Tension test for strength (see 3.7).

(4) Bend test for soundness and ductility, except castings (see 3.8).

(5) When welding castings to other castings or wrought materials, the bend test for soundness and ductility of groove welds and fillet welds shall be omitted. A nick-break fracture test shall be conducted (see 3.9).

**3.15.2** The following are required tests for fillet welds:

(1) Visual examination for weld surface quality and dimensions (see 3.6).

(2) Macroetch test for penetration and weld size (see 3.6.1.2).

(3) Fracture test for soundness or root bend test for soundness, except castings (see 3.10).

**3.15.3 Plug and Slot Welds.** Qualification of any groove or fillet weld procedure qualifies any WPS for making plug or slot welds.



Copyright American Welding Society
Provided by IHS under license with AWS
No reproduction or networking permitted without license from IHS
Licensee=University of Texas Revised Sub Account/5620001114
Not for Resale, 08/29/2012 23:44:22 MDT

**3.15.4 Test Specimens—Number, Type, and Preparation.** The type and number of specimens that shall be tested to qualify a WPS shall be found in the following tables:

(1) Table 3.4 (CJP)

(2) Table 3.5 (PJP)

(3) Table 3.6 (Fillet)

**3.15.5 Location of Test Specimens for WPS Qualification.** One sample weldment of sufficient size to obtain the number of test specimens required by Table 3.4, 3.5, or 3.6, as applicable, shall be prepared in conformance with the WPS.

**3.15.5.1 Test Specimens—Groove Welds—Plate.** The location of test specimens shall conform to Figure 3.20(A), 3.20(B), or 3.20(C). CJP groove welds made on plates 3/4 in [20 mm] or greater in thickness shall be tested using the test specimens in Figure 3.20(B). PJP groove welds shall be tested with the unfused side machined off to the depth of the effective weld size. For base metals and combinations of base and filler metals which differ significantly in ductility, test specimen coupons in Figure 3.20(C) shall be used.

**3.15.5.2 PJP Groove Welds—Plate or Pipe.** A sample weld shall be made using the type of groove design and WPS to be used in construction, except the depth of groove need not exceed 1 in [25 mm].

If the PJP groove weld is to be used for corner or T-joints, the butt joints shall have a temporary restrictive plate in the plane of the square face to simulate the T-joint configuration. The sample weld shall be tested as follows:

(1) When a WPS has been qualified for a CJP groove weld and is applied to the welding conditions of a PJP groove weld, three macroetch cross section test specimens are required.

(2) If a WPS is not covered by (1), then a sample joint shall be prepared and a macroetch test specimen made to determine the weld size. Then the excess material is machined off the bottom side of the joint to the thickness of the weld size.

Tension and bend specimens shall be prepared and tests performed as required for CJP groove welds.

**3.15.6 Test Specimens—Groove Welds—Pipe.** The location of test specimens shall conform to Figure 3.21, 3.22, 3.23, or 3.24.

**3.15.7 Test Specimens—Fillet Welds.** The location of test specimens shall conform to 3.10.1 and Figure 3.17, 3.18, or 3.19.

**3.15.8 Acceptance Criteria—Groove Welds**

**3.15.8.1** Visual examination shall conform to 3.6.2.

**3.15.8.2** Tension test results shall conform to 3.7.3.

**3.15.8.3** Bend test results shall conform to 3.8.3 (castings excluded).

**3.15.8.4** Macroetch examination shall conform to 3.6.1.2. PJP groove welds shall equal or exceed the specified weld size.

**3.15.8.5** Nick-break fracture tests of CJP groove welds in cast material shall conform to 3.9.2.

**3.15.9 Acceptance Criteria—Fillet Welds**

**3.15.9.1** Visual examination shall conform to 3.6.3.

**3.15.9.2** Fracture test results shall conform to 3.10.3.1. Fillet weld root bend test results shall conform to 3.10.3.2. Cast material (M26) shall be tested by the macroetch of the test specimen only.

**3.15.9.3** Macroetch examination in conformance with 3.6.1.2 shall exhibit complete penetration to the root of the joint but not necessarily beyond.

## 3.16 Retests

If any one specimen of all those tested fails to meet the test requirements for qualification, two retests of that particular type of test specimen may be performed with specimens cut from the same test weldment, or from an additional weldment made following the WPS being qualified. Both retest specimens shall meet the test requirements for the WPS to be qualified.

# *Part D*
# *Performance Qualification*

## 3.17 General

The qualification tests described in Part D are specially devised to determine the ability of a welder, welding operator, or tack welder to produce sound welds in conformance with the WPS. These qualification tests are not intended as a guide for selecting the WPS to be used for welding during construction. The test welds shall be made in conformance with the requirements for the WPS.

Welders, welding operators, and tack welders should demonstrate knowledge of safe practices and the particular hazards of the welding process and the procedures to be used in construction.



Copyright American Welding Society
Provided by IHS under license with AWS
No reproduction or networking permitted without license from IHS
Licensee=University of Texas Revised Sub Account/5620001114
Not for Resale, 08/29/2012 23:44:22 MDT

**3.17.1 Definitions.** For purposes of this code the following shall apply:

(1) A *welder* is a person who uses a manual or semi-automatic process.

(2) A *welding operator* is a person who operates automatic equipment and program-guided systems, but has a degree of control over setting the values of the welding conditions. The welding operator may also adjust the path of the equipment along a weld joint.

(3) A *tack welder* is a person who, under the direction of a fitter, or as a fitter, tack welds an assembly in order to hold the parts together until the final welds are made.

**3.17.2 Identification of Welders, Welding Operators, and Tack Welders.** Each qualified welder, welding operator, and tack welder shall be assigned an identifying number, letter or symbol by the Contractor, fabricator, or manufacturer, which shall be used to identify the work of that person.

**3.17.3 Records of Tests.** The essential variables of the performance qualification test and the test results obtained by each welder, welding operator, or tack welder shall be recorded on a Record of Performance Qualification Tests. A suggested form for these records is given in Annex F, Form F(c).

**3.17.4 Special Positions.** A Contractor, fabricator, or manufacturer who does production welding in a special orientation may make the tests for performance qualification in this specific orientation. Such qualifications are valid only for the positions actually tested, except that an angular deviation of ±15° is allowed in the inclination of the weld axis and the rotation of the weld face, as described in Figure 3.1. or 3.2.

**3.17.5** A welder, welding operator, or tack welder who satisfactorily completes a test weldment that meets the criteria for WPS qualification in Part C of this clause shall be considered qualified to weld joints within the type and position limitations for the qualification test weld described in Table 3.7 and subject to the limitation of variables for welders, welding operators, or tack welders in 3.20, 3.21, or 3.22, as applicable.

**3.17.6** Welders qualified to make groove or fillet welds shall also be qualified to make any plug or slot weld.

## 3.18 Limits of Qualified Positions for Performance

To reduce the number of welding performance qualifications that may be required, qualification under certain conditions shall also qualify for other conditions as shown in Table 3.7.

## 3.19 Preparation of Test Weldments—Performance Qualification

Test plate thickness and type of bend test required shall be determined from Table 3.8(1). These qualify the welder, welding operator, or tack welder for the range of plate thickness required to be welded on the job.

**3.19.1 Welder, Welding Operator and Tack Welder Groove Weld Qualification Plates.** The following figure numbers apply to the position and thickness requirements for welders.

(1) Figure 3.25—Qualification in all positions; plate thickness ≤1/8 in [3 mm].

(2) Figure 3.26—Qualification in all positions; plate thickness >1/8 in [3 mm].

(3) Figure 3.27—Qualification in the horizontal position; plate thickness >1/8 in [3 mm].

**3.19.2 Alternative Groove Weld Qualification Test for Plate.** Test plates shall be prepared and welded using the joint details and welding parameters of a qualified WPS. Each half of the test plate assembly shall have minimum dimensions of 5 in by 10 in [125 mm by 250 mm] with the groove preparation along the 10 in [250 mm] dimension (see Figure 3.28).

**3.19.3 Groove Weld Qualification Test For Pipe or Tube, Including T-, Y-, or K-Connections.** Grooves for performance qualification tests for pipe or tube shall be prepared and welded using the joint details and welding parameters of a qualified pipe or tube WPS. The joint detail shall be either:

(1) That shown in a WPS for a single-welded pipe groove weld; or

(2) Single V-groove, 60° included angle, 1/16 in [2 mm] maximum root face (f) and root opening (R) without backing (see Figure 3.29 or 3.30). A pipe diameter and wall thickness shall be selected from Table 3.8(2), 3.8(3), or 3.8(4), as required, that will qualify the welder, welding operator, or tack welder for the class of structure, range of diameters and wall thickness to be welded in production; or

(3) A single V-groove, 60° included angle and suitable root face (f) and root opening (R) with backing (see Figure 3.31).



Copyright American Welding Society
Provided by IHS under license with AWS
No reproduction or networking permitted without license from IHS
Licensee=University of Texas Revised Sub Account/5620001114
Not for Resale, 08/29/2012 23:44:22 MDT

**3.19.4 Fillet Weld Qualification Test or Tack Welder Qualification Test**

**3.19.4.1 Plate.** Weld a fillet weld soundness test weldment in conformance with Table 3.8(1) and Figure 3.32.

**3.19.4.2 Pipe.** Weld a fillet weld soundness test weldment in conformance with Table 3.8(4) and Figure 3.33.

## 3.20 Essential Variables

Changes beyond the limitation of essential variable for welders, welding operators, or tack welders described in Table 3.9 shall require requalification.

## 3.21 Tests—Performance Qualification

**3.21.1 Required Tests—Groove Welds.** The following tests shall be required for performance qualification:

(1) Visual examination for appearance and dimensions.

(2) Bend test for soundness and ductility (except castings), or RT (see 3.21.6.1 or 3.21.6.3).

(3) When welding a casting to other castings or wrought materials, the bend test for soundness and ductility of groove welds shall be omitted, and a macroetch test for soundness shall be conducted (see 3.21.6.4).

**3.21.2 Required Tests—Fillet Welds.** The following tests shall be required for performance qualification:

(1) Visual examination for appearance and dimensions and macroetch test.

(2) Fracture test for soundness (see 3.21.6.2).

(3) Macroetch test for soundness of welded castings (see 3.21.6.4).

**3.21.3 Test Specimens—Number, Type, and Preparation.** The type and number of test specimens that shall be tested to qualify a welder, welding operator, or tack welder are shown in Table 3.8 together with the range of material thicknesses that are qualified for use in construction in relation to the thickness of the test material used in making the qualification. RT of the groove-weld test assembly may be used at the Contractor's option in lieu of mechanical testing.

**3.21.4 Location of Test Specimens for Performance Qualification.** One sample weldment shall be made for the type of weld qualification being tested. Test size of the sample weldment and location of the test specimens to be removed shall be in conformance with the figures associated with the type of weldment being tested (see Figures 3.25 through 3.33). The removal of test specimens from pipe shall be as shown in Figure 3.34.

**3.21.5 Preparation of Test Specimens.** The test specimens shall be prepared in conformance with Clause 3, Part B.

**3.21.6 Test Procedures**

**3.21.6.1** Bend tests shall be made as described in 3.8.2.

**3.21.6.2 Fillet Weld Fracture Test.** The entire length of the fillet weld shall be examined visually; then, the 6 in [150 mm] long specimen shall be tested as described in 3.21.2(2) (see Figure 3.32).

**3.21.6.3** RT procedure shall be as described in Clause 5, Part B.

**3.21.6.4** Macroetch test procedure is described in 3.6.1.2.

**3.21.7 Acceptance Criteria—Groove Welds.** The following criteria shall be used to evaluate groove welds:

**3.21.7.1** Visual examination criteria shall conform to 3.6.2.

**3.21.7.2** Guided bend test results shall conform to 3.8.3.

**3.21.7.3** RT evaluation shall be conform to 3.11.2.

**3.21.7.4** Macroetch test results shall conform to 3.9.2.

**3.21.8 Acceptance Criteria—Fillet Welds**

**3.21.8.1** Visual examination criteria shall conform to 3.6.3. Penetration through metal 1/8 in [3 mm] and thinner may be accepted.

**3.21.8.2** Fracture test results shall conform to 3.10.3.1.

## 3.22 Retests

**3.22.1** The performance test may be terminated at any stage of the testing procedure, whenever it becomes apparent to the supervisor conducting the tests that the welder, welding operator, or tack welder does not have the required skill to produce satisfactory results.



Copyright American Welding Society
Provided by IHS under license with AWS
No reproduction or networking permitted without license from IHS
Licensee=University of Texas Revised Sub Account/5620001114
Not for Resale, 08/29/2012 23:44:22 MDT

**3.22.2** In case a welder, welding operator, or tack welder fails to meet the requirements of one or more weld tests, a retest may be performed under the following conditions:

**3.22.2.1** An immediate retest may be made consisting of two test specimens of each type on which the welder, welding operator, or tack welder failed. All retest specimens shall meet all the specified requirements.

**3.22.2.2** A complete performance qualification retest may be made at a later date for any failed qualification tests, provided there is evidence that the welder, welding operator, or tack welder has had further training or practice.

## 3.23 Period of Effectiveness

The welder's, welding operator's, or tack welder's qualification, as specified in this code (Clause 3, Part D), shall be considered as remaining in effect indefinitely unless (1) the welder, welding operator, or tack welder is not engaged in a given process of welding for which the welder, welding operator, or tack welder is qualified for a period exceeding six months, or (2) there is some specific reason to question the welder's, welding operator's, or tack welder's ability.



Copyright American Welding Society
Provided by IHS under license with AWS
No reproduction or networking permitted without license from IHS
Licensee=University of Texas Revised Sub Account/5620001114
Not for Resale, 08/29/2012 23:44:22 MDT

**Table 3.1**
**Limitations of Essential Variables of a WPS[a] (see 3.14)**

| **Essential Variable**<br>(Changes outside these limits require requalification) | GMAW | GTAW | PAW-VP |
|---|---|---|---|
| **Welding Process** | | | |
| A change in the welding process, e.g., from GMAW to GTAW | X | X | X |
| **Base-Metal Alloy** | | | |
| A change from one M-number group to another M-number group or to an alloy that does not have an M-number[b] | X | X | X |
| **Base-Metal Thickness** | | | |
| A change in thickness beyond the limitations of the qualified range as shown in Table 3.4, 3.5, or 3.6, as applicable | X | X | X |
| **Filler-Metal Alloy** | | | |
| A change from one F-number group to another F-number group or to an alloy that does not have an F-number[c] | X | X | X |
| **Filler Metal** | | | |
| The addition or deletion of filler metal | | X | X |
| A change in the method by which filler metal is added | | X | X |
| An increase or decrease in the nominal filler metal diameter by: | >1/64 in [0.4 mm] | >1/16 in [2 mm] | >1/64 in [0.4 mm] |
| **Electrical Parameters** | | | |
| An increase or decrease in the specified amperage by: | >20% | >20% | >20% |
| An increase or decrease in the specified voltage by: | >15% | >15% | >15% |
| An increase or decrease in the specified travel speed by: | >20% | >25% | >25% |
| **Shielding** | | | |
| A change in shielding gas from a single gas to any other single gas or to a mixture of gasses | X | X | X |
| A change of 10% or more in the specified nominal percentage composition of a gas mixture | X | X | X |
| An increase in the total flow rate | >50% | >50% | >50% |
| A decrease in the total flow rate | >20% | >20% | >20% |
| **Welding Power Supply** | | | |
| A change from conventional type to pulsed type and vice versa | X | X | |
| A change from ac to dc or vice versa | X | X | |
| A change from DCEP to DCEN and vice versa | | X | |
| **Number of Weld Passes** | | | |
| For a specified groove area, a change >25% in the number of passes specified[d] | X | X | X |
| **Welding Position** | | | |
| A change in position in which welding is done exceeding the limitations of Table 3.3 | X | X | X |

(Continued)



Copyright American Welding Society
Provided by IHS under license with AWS
No reproduction or networking permitted without license from IHS
Licensee=University of Texas Revised Sub Account/5620001114
Not for Resale, 08/29/2012 23:44:22 MDT

**Table 3.1 (Continued)**
**Limitations of Essential Variables of a WPS[a] (see 3.14)**

| **Essential Variable**<br>(Changes outside these limits require requalification) | GMAW | GTAW | PAW-VP |
|---|---|---|---|
| **Direction of Welding** | | | |
| A change from forehand to backhand and vice versa except as stated in Table 4.4 | X | X | X |
| Vertical welding: For any pass from upward to downward or vice versa | X | X | X |
| **Groove Type** | | | |
| A change in the type of groove; except the qualification of a CJP groove weld qualifies any groove detail as shown in Annex B1 except for square groove joints | X | X | X |
| A change in the type of groove to a square groove | X | X | X |
| A decrease of 5° or more in the specified groove angle | X | X | X |
| **Fit-up Tolerances**<br>Changes involving the following: | | | |
| A decrease in the groove angle by: | >5° | >5° | >5° |
| A change in the root opening (when backing is not used) by: | >1/16 in [2 mm] | >1/16 in [2 mm] | >1/16 in [2 mm] |
| An increase in the root face (when not back gouged) by: | >1/16 in [2 mm] | >1/16 in [2 mm] | >1/16 in [2 mm] |
| **Technique** | | | |
| A change from stringer-bead technique to a weave-bead technique (for heat-treatable materials only)[e] | X | X | X |
| **Cleaning**<br>A change in the type of cleaning used (mechanical, chemical, etc.) | | | |
| (a) in initial joint preparation | X | X | X |
| (b) in interpass cleaning of weld beads | X | X | X |
| **Backing** | | | |
| A change from permanent backing to temporary or no backing | X | X | X |
| **Backgouging** | | | |
| Omission, but not inclusion of | X | X | X |
| **Preheat** | | | |
| Increase from specified (heat-treatable alloy only)[e] by: | >100°F [55°C] | >100°F [55°C] | >100°F [55°C] |
| **Interpass Temperature** | | | |
| Increase from specified maximum (heat-treatable alloys only)[e] by: | >100°F [55°C] | >100°F [55°C] | >100°F [55°C] |

[a] An "X" indicates applicability for the process; a shaded area indicates nonapplicability.
[b] M-numbers are shown in 3.2.1.
[c] F-numbers are shown in 4.3.2.
[d] If the area of the groove is changed, the number of passes may be changed in proportion to the area.
[e] M23, M24, M26, and M27 are heat-treatable alloys.



Copyright American Welding Society
Provided by IHS under license with AWS
No reproduction or networking permitted without license from IHS
Licensee=University of Texas Revised Sub Account/5620001114
Not for Resale, 08/29/2012 23:44:22 MDT

**Table 3.2**
**Tensile Strength of Welded Aluminum Alloys (see 3.7.3.1)**
**(GTAW or GMAW with No Postweld Heat Treatment)**

| Material No. | Alloy and Temper(s) | | Product Thickness in inches [mm] | Minimum Tensile Strength in ksi [MPa] |
|---|---|---|---|---|
| 21 | 1060-0, H12, H14, H16, H18, H22, H24, H26, H28, H112, H113, F | Sheet & Plate | Up thru 3.000 [75] | 8 [55] |
| | | Extrusions | All | 8.5 [60] |
| 21 | 1100-0, H12, H14, H16, H18, H22, H24, H26, H28, H112, H113, F | All | Up thru 3.000 [75] | 11 [75] |
| 24 | 2219-T62, T81, T851, T8510, T8511, T87, 2219-T6, T852 | All | Up thru 2.999 [75] | 35 [240] |
| | | Plate | 3.000–6.000 [75–150] | 35 [240] |
| | | Forgings | 3.000–4.000 [75–100] | 35 [240] |
| 21 | 3003-0, H12, H14, H16, H18, H22, H24, H26, H28, H112, H113, F | All | Up thru 3.000 [75] | 14 [95] |
| 21 | Alclad 3003-0, H12, H14, H16, H18, H112, H113, F, H22, H24, H26 | Tube | All | 13 [90] |
| | | Sheet & Plate | Up thru 0.499 [13] | 13 [90] |
| | | Plate | 0.500–3.000 [13–75] | 14 [95] |
| 22 | 3004-0, H22, H24, H26, H28, H32, H34, H36, H38, H112, F | All | Up thru 3.000 [75] | 22 [150] |
| 22 | Alclad 3004-0, H22, H24, H26, H32, H34, H36, H38, H112, F | Sheet & Plate | Up thru 0.499 [13] | 21 [145] |
| | | Plate | 0.500–3.000 [13–75] | 22 [150] |
| 21 | 5005-0, H12, H14, H16, H18, H22, H24, H26, H32, H34, H36, H38, H112, F | All | Up thru 3.000 [75] | 15 [105] |
| 21 | 5050-0, H22, H24, H26, H32, H34, H36, H38, H112, F | All | Up thru 3.000 [75] | 18 [125] |
| 22 | 5052-0, H22, H24, H26, H28, H32, H34, H36, H38, H112, F | All | Up thru 3.000 [75] | 25 [170] |
| 25 | 5083-0, H111, H112, 5083-0, H111, H112, F | Forgings | Up thru 4.000 [100] | 38 [260] |
| | | Extrusions | Up thru 5.000 [125] | 39 [270] |
| | 5083-0, H112, H116, H321, F | Sheet & Plate | 0.051–1.500 [1–38] | 40 [275] |
| | | Plate | 1.501–3.000 [38–75] | 39 [270] |
| | 5083-0, F | Plate | 3.001–5.000 [75–125]<br>5.001–7.000 [125–175]<br>7.001–8.000 [175–200] | 38 [260]<br>37 [255]<br>36 [250] |
| 25 | 5086-0, H32, H34, H36, H38, H111, H112, H116, F | All | Up thru 2.000 [50] | 35 [240] |
| | 5086-0, H111, H112, F | Extrusions<br>Plate | 2.001–5.000 [50–125]<br>2.001–3.000 [50–75] | 35 [240]<br>34 [235] |
| 22 | 5154-0, H22, H24, H26, H28, H32, H34, H36, H38, H112, F | All | Up thru 3.000 [75] | 30 [205] |
| 22 | 5254-0, H32, H34, H36, H38, H112, F | All | 0.051–3.000 [1–75] | 30 [205] |

(Continued)



Copyright American Welding Society
Provided by IHS under license with AWS
No reproduction or networking permitted without license from IHS
Licensee=University of Texas Revised Sub Account/5620001114
Not for Resale, 08/29/2012 23:44:22 MDT

**Table 3.2 (Continued)**
**Tensile Strength of Welded Aluminum Alloys (see 3.7.3.1)**
**(GTAW or GMAW with No Postweld Heat Treatment)**

| Material No. | Alloy and Temper(s) | | Product Thickness in inches [mm] | Minimum Tensile Strength in ksi [MPa] |
|---|---|---|---|---|
| 22 | 5454-0, H32, H34, H111, H112, F | All | Up thru 3.000 [75] | 31 [215] |
| 25 | 5456-0, H111, H112, F | Extrusions | Up thru 5.000 [125] | 41 [285] |
| | 5456-0, H112, H116, H321, F | Sheet & Plate | 0.051–1.500 [1–38] | 42 [285] |
| | | Plate | 1.501–3.000 [38–75] | 41 [285] |
| | 5456-0, H116, F | Plate | 3.001–5.000 [75–125] | 40 [270] |
| | 5456-0, F | Plate | 5.001–7.000 [125–175]<br>7.001–8.000 [175–200] | 39 [270]<br>38 [260] |
| 22 | 5652-0, H22, H24, H32, H34, H112, F | All | Up thru 3.000 [75] | 25 [170] |
| 23 | 6005-T5, 6005A-T61 | Extrusions | Up thru 1.000 [25] | 24 [165] |
| 23 | 6061-T4, T42, T451, T51, T6, T62, T651 | All | Up thru 3.000 [75] | 24 [165] |
| | 6061-T6, T62, T651 | Plate & Forgings | 3.001–4.000 [75–100] | 24 [165] |
| | 6061-T62, T651 | Plate | 4.001–6.000 [100–150] | 24 [165] |
| | 6061-T6 | Forgings | 4.001–8.000 [100–200] | 24 [165] |
| 23 | Alclad 6061-T4, T42, T451, T6, T62, T651 | Sheet & Plate | Up thru 3.000 [75] | 24 [165] |
| | Alclad 6061-T62, T651 | Plate | 3.001–5.000 [75–125] | 24 [165] |
| 23 | 6063-T4, T42, T5, T52, T6, T62, T83, T831, T832 | Extrusions | Up thru 1.000 [25] | 17 [115] |
| 23 | 6082-T6, T6511 | Extrusions | 0.200 to 6.000 [5 to 150] | 28 [190] |
| 23 | 6351-T4, T5, T51, T53, T54, T6 | Extrusions | Up thru 1.000 [25] | 24 [165] |
| 27 | 7005-T53 | Extrusions | 0.125–1.000 [3–25] | 40 [275] |
| 26 | A201.0-T7 | Castings | All | Note a |
| 26 | 354.0-T61, T62 | Castings | All | Note a |
| 26 | C355.0-T6, T61 | Castings | All | Note a |
| 26 | 356.0-T6, T7, T71 | Castings | All | Note a |
| 26 | A356.0-T6, T61 | Castings | All | Note a |
| 26 | 357.0-T6, T7 | Castings | All | Note a |
| 26 | A357.0-T6, T61 | Castings | All | Note a |
| 26 | 359.0-T61, T62 | Castings | All | Note a |
| 26 | 443.0-F | Castings | All | Note a |
| 26 | A444.0-T4 | Castings | All | Note a |
| 26 | 514.0-F | Castings | All | Note a |
| 26 | 535.0-F | Castings | All | Note a |

[a] Minimum as-welded tensile strength has not been established for this alloy. The tensile properties must be established by WPS qualification and approved by the Engineer.



Copyright American Welding Society
Provided by IHS under license with AWS
No reproduction or networking permitted without license from IHS
Licensee=University of Texas Revised Sub Account/5620001114
Not for Resale, 08/29/2012 23:44:22 MDT

**Table 3.3**
**WPS Qualification—Type of Weld and Position Limitations (see 3.13)**

| Qualification Test | | Type of Weld and Position of Welding Qualified[c,d] | | | |
|---|---|---|---|---|---|
| | | Plate | | Pipe | |
| Weld | Plate or Pipe Positions[c] | Groove | Fillet | Groove | Fillet |
| Plate-groove CJP | 1G | F | F | F[a] | F[a] |
| | 2G | F, H | F, H | F, H[a] | F, H[a] |
| | 3G | F, V | F, V | | |
| | 4G | F, OH | F, OH | | |
| Plate-groove PJP | 1G | F | F | F[a] | F[a] |
| | 2G | H | F, H | F, H[a] | F, H[a] |
| | 3G | V | V | | |
| | 4G | OH | OH | | |
| Plate-fillet | 1F | | F | | F[a] |
| | 2F | | F, H | | F, H[a] |
| | 3F | | V | | F, V, H[a] |
| | 4F | | All | | OH[a] |
| Pipe-groove CJP | 1G | F | F | F | F |
| | 2G | F, H | F, H | F, H | F, H |
| | 5G | F, V, OH | F, V | F, V, OH | F, V, OH |
| | 6G | All | All | All[b] | All |
| Pipe-fillet | 1F | | F | | F |
| | 2F, 2FR | | F, H | | F, H |
| | 4F | | F, H, OH | | F, H, OH |
| | 5F | | All | | All |

[a] Qualifies for welding pipe or tubing over 24 in [610 mm] in diameter.
[b] Qualifies for T-, Y-, and K-connections and for CJP groove welds in all positions.
[c] See Figures 3.3, 3.4, 3.5, and 3.6.
[d] Also qualifies WPSs for plug and slot welds.



Copyright American Welding Society
Provided by IHS under license with AWS
No reproduction or networking permitted without license from IHS
Licensee=University of Texas Revised Sub Account/5620001114
Not for Resale, 08/29/2012 23:44:22 MDT

## Table 3.4
## Number and Type of Test Specimens and Range of Thickness Qualified—WPS Qualification—CJP Groove Welds [see 3.15.4(1)]
## (Dimensions in Inches)

1. Tests on Plate

| Nominal Plate Thickness (T) Tested, in | Number of Sample Welds per Position | Visual Inspection (see 3.6) | Number of Specimens Required: Reduced Section Tension (see Fig. 3.7) | Root Bend (see Figures 3.11, 3.12) | Face Bend (see Figures 3.11, 3.12) | Side Bend (see Figure 3.10) | Nominal Plate Thickness Qualified, in |
|---|---|---|---|---|---|---|---|
| T < 1/8 | 1[a] | Yes | 2 | 2 | 2 | — | T to 2T |
| 1/8 ≤ T ≤ 3/8 | 1 | Yes | 2 | 2 | 2 | — | 1/8 to 2T |
| Over 3/8 and under 1 | 1 | Yes | 2 | — | — | 4 | T/2 to 2T |
| 1 and over | 1 | Yes | 2 | — | — | 4 | T/2 to unlimited |

2. Tests on Pipe or Tubing—Class I Structures (see 2.0)

| Weld Type | Pipe or Tube Size of Sample Weld: Nominal Diam., in | Nominal Wall Thickness, T, of Wrought, in | Number of Sample Welds per Position | Visual Inspection (see 3.6) | Number of Specimens Required: Nick-Break Fracture Test (see Fig. 3.16) | Tension Test (see Figs. 3.7, 3.8, 3.9) | Root Bend (see Fig. 3.12) | Face Bend (see Fig. 3.12) | Nominal Pipe or Tubing Diameter Qualified, in: Min. | Max. | Nominal Wall Thickness Qualified, in: Min. | Max. |
|---|---|---|---|---|---|---|---|---|---|---|---|---|
| Wrought to Wrought | 6 through 8 | 1/8–3/8 | 1 | Yes | — | 2 | 2 | 2 | 3/4 | 16 | 1/8 | 2T |
| Cast to Wrought or Cast to Cast | 3 through 5 | 3/16 | 1 | Yes | 2 | 2 | — | — | 2 | 16 | 1/8 | 1/2 |

3. Tests on Pipe or Tubing—Class II Structures (see 2.0)

| Nominal Diam. | Pipe Size of Sample Weld: Nominal Wall Thickness, T | Number of Sample Welds per Position | Visual Inspection (see 3.6) | Number of Specimens Required: Tension Test (see Figs. 3.7, 3.8, 3.9) | Root Bend (see Fig. 3.12) | Face Bend (see Fig. 3.12) | Side Bend (see Fig. 3.10) | Nominal Pipe or Tubing Diameter Qualified, in: Diam. | Nominal Wall Thickness Qualified, in: Min. | Max. |
|---|---|---|---|---|---|---|---|---|---|---|
| 2 in or 3 in | Sch. 80 or Sch. 40 | 2 | Yes | 2 | 2 | 2 | — | 3/4 through 4 | 1/8 | 1/2 |
| 6 in or 8 in | Sch. 120 or Sch. 80 | 1 | Yes | 2 | — | — | 4 | 4 and over | 0.187 | Unlimited |

(Continued)



Copyright American Welding Society
Provided by IHS under license with AWS
No reproduction or networking permitted without license from IHS
Licensee=University of Texas Revised Sub Account/5620001114
Not for Resale, 08/29/2012 23:44:22 MDT

**Table 3.4 (Continued)**
**Number and Type of Test Specimens and Range of Thickness Qualified—**
**WPS Qualification—CJP Groove Welds [see 3.15.4(1)]**
**(Dimensions in Inches)**

3. Tests on Pipe or Tubing—Class II Structures (see 2.0) (Continued)

| Pipe Size of Sample Weld | | | | Number of Specimens Required | | | | Nominal Pipe or Tubing Diameter Qualified, in | Nominal Wall Thickness Qualified, in | |
|---|---|---|---|---|---|---|---|---|---|---|
| Nominal Diam. | Nominal Wall Thickness, T | Number of Sample Welds per Position | Visual Inspection (see 3.6) | Reduced Section Tension (see Figs. 3.7, 3.8, 3.9) | Root Bend (see Fig. 3.12) | Face Bend (see Fig. 3.12) | Side Bend (see Fig. 3.10) | Diam. | Min. | Max. |
| Job Size Pipe or Tubing | | | | | | | | | | |
| <24 in | T < 1/8 | 1[a] | Yes | 2 | 2 | 2 | — | Test diam. & over | T | 2T |
| | 1/8 ≤ T ≤ 3/8 in | 1[a] | Yes | 2 | 2 | 2 | — | Test diam. & over | 1/8 | 2T |
| | 3/8 < T < 3/4 in | 1[a] | Yes | 2 | — | — | 4 | Test diam. & over | T/2 | 2T |
| | T ≥ 3/4 in | 1[a] | Yes | 2 | — | — | 4 | Test diam. & over | 0.375 | Unlimited |
| ≥24 in | 1/8 ≤ T ≤ 3/8 in | 1 | Yes | 2 | 2 | 2 | — | Test diam. & over | 1/8 | 2T |
| | 3/8 < T < 3/4 in | 1 | Yes | 2 | — | — | 4 | 24 & over | T/2 | 2T |
| | T ≥ 3/4 in | 1 | Yes | 2 | — | — | 4 | 24 & over | 0.375 | Unlimited |

[a] Adequate number of test welds per position must be made to obtain required test specimens.



Copyright American Welding Society
Provided by IHS under license with AWS
No reproduction or networking permitted without license from IHS
Licensee=University of Texas Revised Sub Account/5620001114
Not for Resale, 08/29/2012 23:44:22 MDT

## Table 3.4
## Number and Type of Test Specimens and Range of Thickness Qualified—WPS Qualification—CJP Groove Welds [see 3.15.4(1)]
## (Dimensions in Millimeters)

1. Tests on Plate

| Nominal Plate Thickness (T) Tested, mm | Number of Sample Welds per Position | Visual Inspection (see 3.6) | Number of Specimens Required: Reduced Section Tension (see Fig. 3.7) | Root Bend (see Figures 3.11, 3.12) | Face Bend (see Figures 3.11, 3.12) | Side Bend (see Figure 3.10) | Nominal Plate Thickness Qualified, mm |
|---|---|---|---|---|---|---|---|
| T < 3 | 1[a] | Yes | 2 | 2 | 2 | — | T to 2T |
| 3 ≤ T ≤ 10 | 1 | Yes | 2 | 2 | 2 | — | 3 to 2T |
| Over 10 and under 25 | 1 | Yes | 2 | — | — | 4 | T/2 to 2T |
| 25 and over | 1 | Yes | 2 | — | — | 4 | T/2 to unlimited |

2. Tests on Pipe or Tubing—Class I Structures (see 2.0)

| Weld Type | Pipe or Tube Size of Sample Weld: Nominal Diam., mm | Nominal Wall Thickness, T, of Wrought, mm | Number of Sample Welds per Position | Visual Inspection (see 3.6) | Number of Specimens Required: Nick-Break Fracture Test (see Fig. 3.16) | Reduced Section Tension (see Figs. 3.7, 3.8, 3.9) | Root Bend (see Fig. 3.12) | Face Bend (see Fig. 3.12) | Nominal Pipe or Tubing Diameter Qualified, mm: Min. | Max. | Nominal Wall Thickness Qualified, mm: Min. | Max. |
|---|---|---|---|---|---|---|---|---|---|---|---|---|
| Wrought to Wrought | 150 through 200 | 3–10 | 1 | Yes | — | 2 | 2 | 2 | 19 | 410 | 3 | 2T |
| Cast to Wrought or Cast to Cast | 75 through 130 | 5 | 1 | Yes | 2 | 2 | — | — | 50 | 410 | 3 | 13 |

3. Tests on Pipe or Tubing—Class II Structures (see 2.0)

| Nominal Diam. | Pipe Size of Sample Weld: Nominal Wall Thickness, T, mm | Number of Sample Welds per Position | Visual Inspection (see 3.6) | Number of Specimens Required: Reduced Section Tension (see Figs. 3.7, 3.8, 3.9) | Root Bend (see Fig. 3.12) | Face Bend (see Fig. 3.12) | Side Bend (see Fig. 3.10) | Nominal Pipe or Tubing Diameter Qualified, mm: Diam. | Nominal Wall Thickness Qualified, mm: Min. | Max. |
|---|---|---|---|---|---|---|---|---|---|---|
| 50 or 75 | 5.5 or 5.5 | 2 | Yes | 2 | 2 | 2 | — | 19 through 100 | 3 | 13 |
| 150 or 200 | 14.3 or 12.7 | 1 | Yes | 2 | — | — | 4 | 100 and over | 5 | Unlimited |

(Continued)



Copyright American Welding Society
Provided by IHS under license with AWS
No reproduction or networking permitted without license from IHS
Licensee=University of Texas Revised Sub Account/5620001114
Not for Resale, 08/29/2012 23:44:22 MDT

## Table 3.4 (Continued)
## Number and Type of Test Specimens and Range of Thickness Qualified—WPS Qualification—CJP Groove Welds [see 3.15.4(1)] (Dimensions in Millimeters)

3. Tests on Pipe or Tubing—Class II Structures (see 2.0) (Continued)

| Nominal Diam. | Pipe Size of Sample Weld: Nominal Wall Thickness, T | Number of Sample Welds per Position | Visual Inspection (see 3.6) | Number of Specimens Required: Reduced Section Tension (see Figs. 3.7, 3.8, 3.9) | Root Bend (see Fig. 3.12) | Face Bend (see Fig. 3.12) | Side Bend (see Fig. 3.10) | Nominal Pipe or Tubing Diameter Qualified, mm: Diam. | Nominal Wall Thickness Qualified, mm: Min. | Max. |
|---|---|---|---|---|---|---|---|---|---|---|
| Job Size Pipe or Tubing | | | | | | | | | | |
| <610 mm | T < 3 mm | 1[a] | Yes | 2 | 2 | 2 | — | Test diam. & over | T | 2T |
| | 3 ≤ T ≤ 10 mm | 1[a] | Yes | 2 | 2 | 2 | — | Test diam. & over | 3 | 2T |
| | 10 < T < 19 mm | 1[a] | Yes | 2 | — | — | 4 | Test diam. & over | T/2 | 2T |
| | T ≥ 19 mm | 1[a] | Yes | 2 | — | — | 4 | Test diam. & over | 10 | Un-limited |
| ≥610 mm | 3 ≤ T ≤ 10 mm | 1 | Yes | 2 | 2 | 2 | — | Test diam. & over | 3 | 2T |
| | 10 < T < 19 mm | 1 | Yes | 2 | — | — | 4 | 610 & over | T/2 | 2T |
| | T ≥ 19 mm | 1 | Yes | 2 | — | — | 4 | 610 & over | 10 | Un-limited |

[a] Adequate number of test welds per position must be made to obtain required test specimens.

## Table 3.5
## Number and Type of Test Specimens and Range of Thickness Qualified—WPS Qualification—PJP Groove Welds [see 3.15.4(2)]

| Groove Type | Groove Depth, Max. | Number of Sample Welds | Number of Specimens Required: Macroetch for Weld Size (E) | Tension and Bend Test: Reduced Section Tension (see Figures 3.7 and 3.8) | Side Bend (see Figure 3.10) | Plate Thickness Qualified, Max. |
|---|---|---|---|---|---|---|
| Same as used in construction[a] | 1 in [25 mm] | 1 | 1 | 2 | 4 | Unlimited |

[a] If a PJP bevel- or J-groove weld is to be used for T-joints or a double-bevel- or double-J-groove weld is to be used for corner joints, the butt joint shall have a temporary restrictive plate in the plane of the square face to simulate a T-joint configuration.



Copyright American Welding Society
Provided by IHS under license with AWS
No reproduction or networking permitted without license from IHS
Licensee=University of Texas Revised Sub Account/5620001114
Not for Resale, 08/29/2012 23:44:22 MDT

**Table 3.6**
**Number and Type of Test Specimens and Range of Thickness Qualified—WPS Qualification—Fillet Welds [see 3.15.4(3)]**

| | | | Number of Specimens Required[a] | | | Sizes Qualified | |
|---|---|---|---|---|---|---|---|
| Test Specimen | Fillet Weld Size | Number of Welds per Procedure | Macroetch | Fracture Test (see Figures 3.17 and 3.18) | Root Bend (see Figure 3.19) | Plate Thickness | Fillet Weld Size |
| 1. Tests of Plate | | | | | | | |
| Fillet Weld Test Option 1 (see Figure 3.17) | Single pass, max. size to be used in construction | 1 in each position to be used | 2 faces | 2 | — | Unlimited | Max. tested single pass and smaller |
| | Multiple pass, min. size to be used in construction | 1 in each position to be used | 2 faces | 2 | — | Unlimited | Min. tested multiple pass and larger |
| Fillet Weld Test Option 2 (see Figure 3.19) | Max. size to be used in construction | 1 in each position to be used | — | — | 2 | Unlimited | All |
| 2. Tests on Pipe and Tubing | | | | | | | |
| Fillet Weld Test—Pipe Option 1 (see Figure 3.18) | Single pass, max. size to be used in construction | 1 in each position to be used | 2 | 4 or more | — | Unlimited | Max. tested single pass and smaller |
| | Multiple pass, min. size to be used in construction | 1 in each position to be used | 2 | 4 or more | — | Unlimited | Min. tested multiple pass and larger |

[a] All welded test specimens shall be visually inspected (see 3.6).



Copyright American Welding Society
Provided by IHS under license with AWS
No reproduction or networking permitted without license from IHS
Licensee=University of Texas Revised Sub Account/5620001114
Not for Resale, 08/29/2012 23:44:22 MDT

**Table 3.7**
**Welder Performance Qualification—Type of Weld and Position Limitations (see 3.17.4)**

| Qualification Test | | Type of Weld and Position of Welding Qualified[c] | | | |
|---|---|---|---|---|---|
| | | Plate | | Pipe | |
| Weld | Plate or Pipe Positions[b] | Groove | Fillet | Groove | Fillet |
| Plate-groove | 1G | F | F, H | F | F, H |
| | 2G | F, H | F, H | F | F, H |
| | 3G | F, V | F, H, V | F | F, H |
| | 4G | F, OH | F, H, OH | F | F, H |
| | 3G and 4G | All | All | F | F, H |
| Plate-fillet | 1F | | F | | F |
| | 2F | | F, H | | F, H |
| | 3F | | F, H, V | | F, H |
| | 4F | | F, H, OH | | F, H |
| | 3F and 4F | | All | | F, H |
| Pipe-groove | 1G | F | F, H | F | F, H |
| | 2G | F, H | F, H | F, H | F, H |
| | 5G | F, V, OH | All | F, V, OH | All |
| | 6G | All | All | (Note a) | All |
| | 2G and 5G | All | All | (Note a) | All |
| Pipe-fillet | 1F | | F | | F |
| | 2F | | F, H | | F, H |
| | 2FR | | F, H | | F, H |
| | 4F | | F, H, OH | | F, H, OH |
| | 5F | | All | | All |

[a] Qualifies all positions and T-, Y-, and K-connections.
[b] See Figures 3.1, 3.2, 3.3, 3.4, 3.5, and 3.6.
[c] Also qualifies welder to make plug and slot welds.



Copyright American Welding Society
Provided by IHS under license with AWS
No reproduction or networking permitted without license from IHS
Licensee=University of Texas Revised Sub Account/5620001114
Not for Resale, 08/29/2012 23:44:22 MDT

## Table 3.8
## Number and Type of Test Specimens and Range of Thickness Qualified—Welder and Welding Operator Qualification (see 3.19 and 3.19.3) (Dimensions in Inches)

1. Tests on Plate

| Type of Weld | Nominal Thickness T of Test Plate as Welded | Visual Inspection | Number of Specimens Required: Bend Tests All Positions[b] Face | Root | Side | Fillet Weld Fracture | Macroetch Test | Nominal Plate Thickness Qualified Min. | Max.[c] |
|---|---|---|---|---|---|---|---|---|---|
| Groove | T < 1/8 | Yes | 1 | 1 | — | — | — | T | 2T |
| Groove | 1/8 ≤ T ≤ 3/8 | Yes | 1 | 1 | — | — | — | 1/8 | 2T |
| Groove | 3/8 < T < 1 | Yes | — | — | 2 | — | — | 1/8 | 2T |
| Groove | ≥1 | Yes | — | — | 2 | — | — | 1/8 | Unlimited |
| Fillet[a] | ≤1/8 | Yes | — | — | — | 1 | 1 | T | Larger of 2T or 3/16 |
| | 1/8 < T < 3/8 | Yes | — | — | — | 1 | 1 | T/2 | 2T |
| | ≥3/8 | Yes | — | — | — | 1 | 1 | T/2 | Unlimited[c] |

2. Tests on Pipe or Tubing—Class I Structures (see 2.0 for definition of Class I structures)

| Material Type | Pipe or Tube Size of Sample Weld: Nominal Pipe Size | Nominal Wall Thickness T of Wrought | Number of Sample Welds per Position | Visual Inspection | Number of Specimens Required: Macroetch Test | Root Bend (see Fig. 3.12)[b] | Face Bend (see Fig. 3.12)[b] | Nominal Pipe Diameter or Tube Size Qualified Min. | Max. | Nominal Wall Thickness Qualified Min. | Max.[c] |
|---|---|---|---|---|---|---|---|---|---|---|---|
| Wrought to Wrought | 6 through 8 | 1/8 ≤ T ≤ 3/8 | 1 | Yes | — | 2 | 2 | 3/4 | 16 | 1/8 | 2T |
| Cast to Wrought or Cast to Cast | 3 through 5 | 3/16 | 1 | Yes | 2 | — | — | 2 | 16 | 1/8 | 1/2 |

3. Tests on Pipe—Class II Structures (see 2.0 for definition of Class II structures)

| Type of Weld | Pipe or Tubing Size as Welded: Nominal Pipe Size | Nominal Wall Thickness | Visual Inspection | Number of Specimens Required: All Positions Except 5G and 6G[b] Face Bend | Root Bend | Side Bend | 5G and 6G Positions Only[b] Face Bend | Root Bend | Side Bend | Nominal Pipe Diameter or Tube Size Qualified | Pipe or Tube Nominal Wall Thickness Qualified Min. | Max.[c] |
|---|---|---|---|---|---|---|---|---|---|---|---|---|
| Groove | 2 or 3 | Schedule 80 or Schedule 40 | Yes | 1 | 1 | — | 2 | 2 | — | ≤4 | 0.063 | 0.674 |
| Groove | 6 or 8 | Schedule 120 or Schedule 80 | Yes | — | — | 2 | — | — | 4 | >4 | 0.187 | Unlimited |

(Continued)



Copyright American Welding Society
Provided by IHS under license with AWS
No reproduction or networking permitted without license from IHS
Licensee=University of Texas Revised Sub Account/5620001114
Not for Resale, 08/29/2012 23:44:22 MDT

**Table 3.8 (Continued)**
**Number and Type of Test Specimens and Range of Thickness Qualified—**
**Welder and Welding Operator Qualification (see 3.19 and 3.19.3)**
**(Dimensions in Inches)**

4. Tests on Job Size Pipe or Tubing

| | Pipe or Tubing Size as Welded | | | Number of Specimens Required | | | | | | | Pipe or Tube Nominal Wall Thickness Qualified | |
|---|---|---|---|---|---|---|---|---|---|---|---|---|
| | | | | All Positions Except 5G and 6G[b] | | | 5G and 6G Positions Only[b] | | | | | |
| Type of Weld | Nominal Pipe Size | Nominal Wall Thickness | Visual Inspection | Face Bend | Root Bend | Side Bend | Face Bend | Root Bend | Side Bend | Nominal Pipe Diameter or Tube Size Qualified | Min. | Max.[c] |
| Groove | ≤4 | Any | Yes | 1 | 1 | — | 2 | 2 | — | ≤4 | 0.063 | 0.674 |
| | ≤4 | <0.063 | Yes | 1 | 1 | — | 2 | 2 | — | ≤4 | T | 2T |
| Groove | >4 | Any | Yes | — | — | 2 | — | — | 4 | 1/2 test diameter or 4 min through unlimited (for maximum size qualified)[e] | 0.187 | Unlimited |
| | | | | Fillet Weld Fracture Test | | | Macroetch Test | | | | | |
| Fillet[d] | 3-1/2 welded to 4 | Schedule 40 Schedule 40 | Yes | 2 | | | 2 | | | All | Unlimited[c] | |

[a] See Figure 3.32.
[b] RT of the welder or welding operator test plate may be made in lieu of the bend test (see 3.5.3 and 3.11).
[c] Qualifies for welding fillet welds on material of unlimited thickness.
[d] See Figure 3.33. Pipe sizes can be used to make a lap joint or a backed-up groove weld (see 3.19.3.(3) and Figure 3.31).
[e] Minimum pipe size qualified shall not be less than 4 in or *d*/2, whichever is greater, where *d* is diameter of test pipe.



Copyright American Welding Society
Provided by IHS under license with AWS
No reproduction or networking permitted without license from IHS
Licensee=University of Texas Revised Sub Account/5620001114
Not for Resale, 08/29/2012 23:44:22 MDT

## Table 3.8
## Number and Type of Test Specimens and Range of Thickness Qualified—Welder and Welding Operator Qualification (see 3.19 and 3.19.3) (Dimensions in Millimeters)

1. Tests on Plate

| Type of Weld | Nominal Thickness T of Test Plate as Welded | Visual Inspection | Number of Specimens Required: Bend Tests All Positions[b] Face | Root | Side | Fillet Weld Fracture | Macroetch Test | Nominal Plate Thickness Qualified Min. | Max.[c] |
|---|---|---|---|---|---|---|---|---|---|
| Groove | T < 3 | Yes | 1 | 1 | — | — | — | T | 2T |
| Groove | 3 ≤ T ≤ 10 | Yes | 1 | 1 | — | — | — | 3 | 2T |
| Groove | 10 < T < 25 | Yes | — | — | 2 | — | — | 3 | 2T |
| Groove | ≥25 | Yes | — | — | 2 | — | — | 3 | Unlimited |
| Fillet[a] | ≤3 | Yes | — | — | — | 1 | 1 | T | Larger of 2T or 5 |
| | 3 < T < 10 | Yes | — | — | — | 1 | 1 | T/2 | 2T |
| | ≥10 | Yes | — | — | — | 1 | 1 | T/2 | Unlimited[c] |

2. Tests on Pipe or Tubing—Class I Structures (see 2.0 for definition of Class I structures)

| Material Type | Pipe or Tube Size of Sample Weld: Nominal Pipe Size | Nominal Wall Thickness T of Wrought | Number of Sample Welds per Position | Visual Inspection | Number of Specimens Required: Macroetch Test | Root Bend (see Fig. 3.12)[b] | Face Bend (see Fig. 3.12)[b] | Nominal Pipe Diameter or Tube Size Qualified Min. | Max. | Nominal Wall Thickness Qualified[c] Min. | Max. |
|---|---|---|---|---|---|---|---|---|---|---|---|
| Wrought to Wrought | 150 through 200 | 3 ≤ T ≤ 10 | 1 | Yes | — | 2 | 2 | 19 | 410 | 3 | 2T |
| Cast to Wrought or Cast to Cast | 75 through 130 | 5 | 1 | Yes | 2 | — | — | 50 | 410 | 3 | 13 |

3. Tests on Pipe—Class II Structures (see 2.0 for definition of Class II structures)

| Type of Weld | Pipe or Tubing Size as Welded: Nominal Pipe Size | Nominal Wall Thickness | Visual Inspection | Number of Specimens Required: All Positions Except 5G and 6G[b] Face Bend | Root Bend | Side Bend | 5G and 6G Positions Only[b] Face Bend | Root Bend | Side Bend | Nominal Pipe Diameter or Tube Size Qualified | Pipe or Tube Nominal Wall Thickness Qualified Min. | Max.[c] |
|---|---|---|---|---|---|---|---|---|---|---|---|---|
| Groove | 50 | 5 | Yes | 1 | 1 | — | 2 | 2 | — | ≤100 | 2 | 17.1 |
| | or | | | | | | | | | | | |
| | 75 | 5 | | | | | | | | | | |
| Groove | 150 | 14 | Yes | — | — | 2 | — | — | 4 | >100 | 5 | Unlimited |
| | or | | | | | | | | | | | |
| | 200 | 13 | | | | | | | | | | |

(Continued)



Copyright American Welding Society
Provided by IHS under license with AWS
No reproduction or networking permitted without license from IHS
Licensee=University of Texas Revised Sub Account/5620001114
Not for Resale, 08/29/2012 23:44:22 MDT

## Table 3.8 (Continued)
## Number and Type of Test Specimens and Range of Thickness Qualified—Welder and Welding Operator Qualification (see 3.19 and 3.19.3) (Dimensions in Millimeters)

4. Tests on Job Size Pipe or Tubing

| Type of Weld | Pipe or Tubing Size as Welded: Nominal Pipe Size | Pipe or Tubing Size as Welded: Nominal Wall Thickness | Visual Inspection | Number of Specimens Required: All Positions Except 5G and 6G[b]: Face Bend | All Positions Except 5G and 6G[b]: Root Bend | All Positions Except 5G and 6G[b]: Side Bend | 5G and 6G Positions Only[b]: Face Bend | 5G and 6G Positions Only[b]: Root Bend | 5G and 6G Positions Only[b]: Side Bend | Nominal Pipe Diameter or Tube Size Qualified | Pipe or Tube Nominal Wall Thickness Qualified[c]: Min. | Pipe or Tube Nominal Wall Thickness Qualified[c]: Max. |
|---|---|---|---|---|---|---|---|---|---|---|---|---|
| Groove | ≤100 | Any | Yes | 1 | 1 | — | 2 | 2 | — | ≤100 | 2 | 17.1 |
| | ≤100 | <2 | Yes | 1 | 1 | — | 2 | 2 | — | ≤100 | T | 2T |
| Groove | >100 | Any | Yes | — | — | 2 | — | — | 4 | 1/2 test diameter or 100 min through unlimited (for maximum size qualified)[e] | 5 | Unlimited |
| | | | | Fillet Weld Fracture Test | | | Macroetch Test | | | | | |
| Fillet[d] | 90 welded to 100 | Schedule 40 Schedule 40 | Yes | 2 | | | 2 | | | All | Unlimited[c] | |

[a] See Figure 3.32.
[b] RT of the welder or welding operator test plate may be made in lieu of the bend test (see 3.5.3 and 3.11).
[c] Qualifies for welding fillet welds on material of unlimited thickness.
[d] See Figure 3.33. Pipe sizes can be used to make a lap joint or a backed-up groove weld (see 3.19.3(3) and Figure 3.31).
[e] Minimum pipe size qualified shall not be less than 100 mm or $d/2$, whichever is greater, where $d$ is diameter of test pipe.



Copyright American Welding Society
Provided by IHS under license with AWS
No reproduction or networking permitted without license from IHS
Licensee=University of Texas Revised Sub Account/5620001114
Not for Resale, 08/29/2012 23:44:22 MDT

**Table 3.9**
**Welding Personnel Performance Essential Variable Changes Requiring Requalification**
**(see 3.20)**

| Essential Variable Changes to WPQR[b] Requiring Requalification | Welding Personnel[a] | | |
|---|---|---|---|
| | Welders | Welding Operators[e, f] | Tack Welders |
| (1) To a process not qualified | X | X | X |
| (2) To a shielding gas not qualified | X | X | X |
| (3) To a position not qualified | X[c] | X | X |
| (4) To a diameter or thickness not qualified | X[d] | X[d] | |
| (5) To a vertical welding progression not qualified (uphill or downhill) | X | | |
| (6) The omission of backing (if used in the WPQR test) | X | X | |

[a] An "X" indicates applicability for the welding for the welding personnel; a shaded area indicates nonapplicability.
[b] WPQR = Welding Performance Qualification Record.
[c] See Table 3.7 for positions qualified by welder WPQR.
[d] See Table 3.8 for ranges of diameters or thicknesses qualified.
[e] Welders qualified for GMAW or GTAW shall be considered as qualified welding operators in the same process(es), subject to the welder essential variable limitations and provided the welders receive training and demonstrate their ability to make satisfactory production welds.
[f] A groove weld qualifies a slot weld for the WPQR position and thickness ranges as shown in Table 3.8.



Copyright American Welding Society
Provided by IHS under license with AWS
No reproduction or networking permitted without license from IHS
Licensee=University of Texas Revised Sub Account/5620001114
Not for Resale, 08/29/2012 23:44:22 MDT

| Tabulation of Positions of Groove Welds | | | |
|---|---|---|---|
| Position | Diagram Reference | Inclination of Axis | Rotation of Face |
| Flat | A | 0° to 15° | 150° to 210° |
| Horizontal | B | 0° to 15° | 80° to 150°<br>210° to 280° |
| Overhead | C | 0° to 80° | 0° to 80°<br>280° to 360° |
| Vertical | D<br>E | 15° to 80°<br>80° to 90° | 80° to 280°<br>0° to 360° |

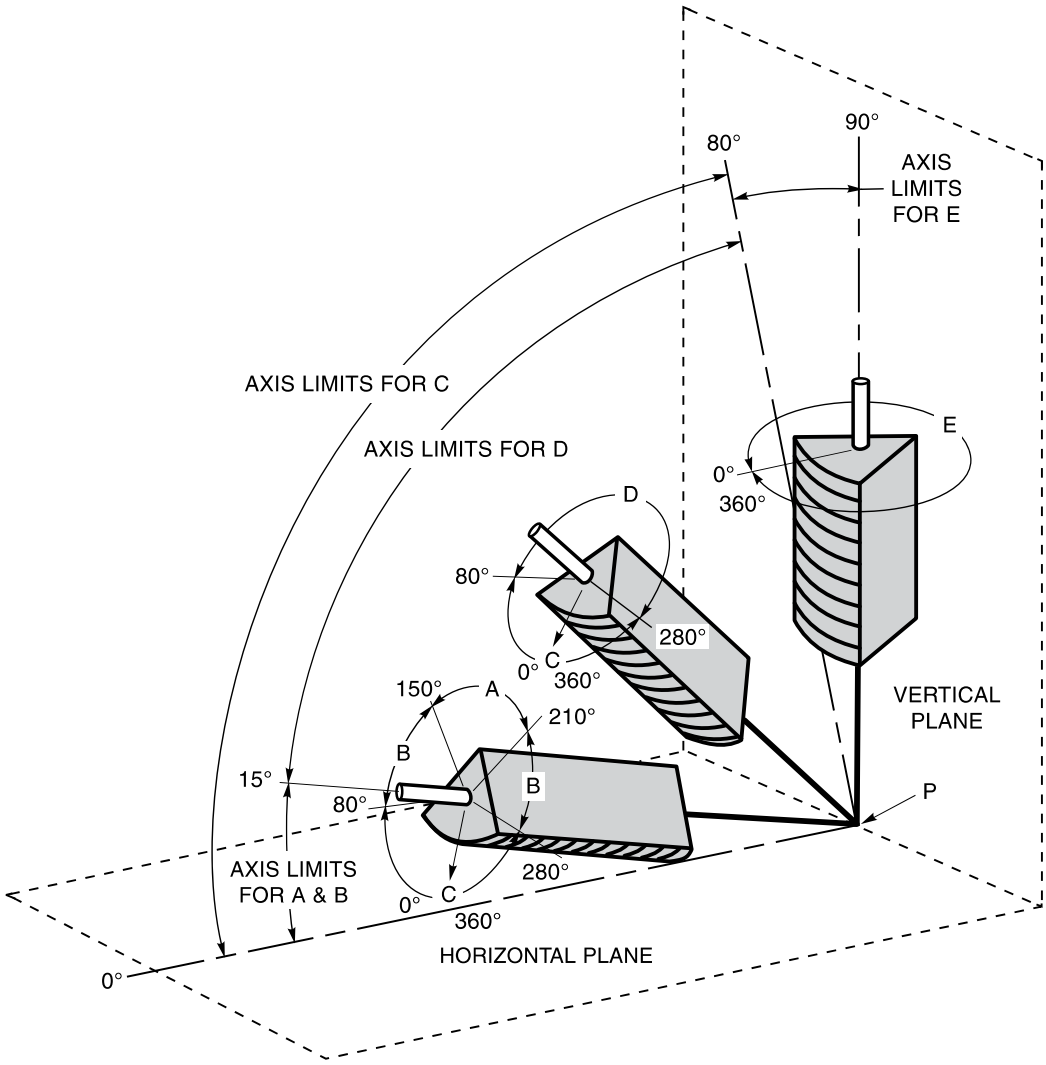


Notes:
1. The horizontal reference plane shall always be taken to lie below the weld under consideration.
2. The inclination of axis shall be measured from the horizontal reference plane toward the vertical reference plane.
3. The angle of rotation of the face shall be determined by a line perpendicular to the theoretical face of the weld which passes through the axis of the weld. The reference position (0°) of rotation of the face invariably points in the direction opposite to that in which the axis angle increases. When looking at point P, the angle of rotation of the face of the weld shall be measured in a clockwise direction from the reference position (0°).

**Figure 3.1—Positions of Groove Welds (see 3.4.1)**



Copyright American Welding Society
Provided by IHS under license with AWS
No reproduction or networking permitted without license from IHS
Licensee=University of Texas Revised Sub Account/5620001114
Not for Resale, 08/29/2012 23:44:22 MDT

| Tabulation of Positions of Fillet Welds | | | |
|---|---|---|---|
| Position | Diagram Reference | Inclination of Axis | Rotation of Face |
| Flat | A | 0° to 15° | 150° to 210° |
| Horizontal | B | 0° to 15° | 125° to 150°<br>210° to 235° |
| Overhead | C | 0° to 80° | 0° to 125°<br>235° to 360° |
| Vertical | D<br>E | 15° to 80°<br>80° to 90° | 125° to 235°<br>0° to 360° |

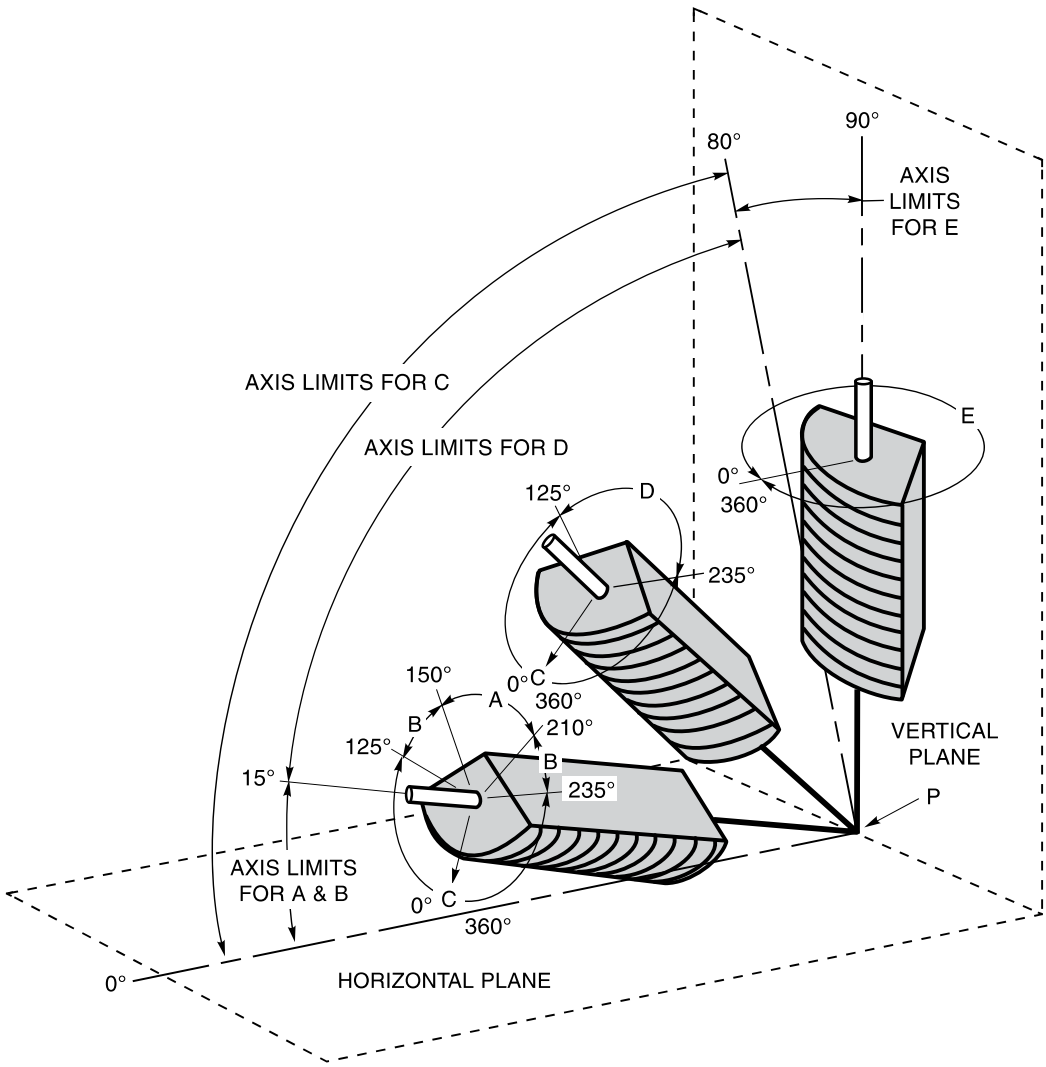


Notes:
1. The horizontal reference plane shall always be taken to lie below the weld under consideration.
2. The inclination of axis shall be measured from the horizontal reference plane toward the vertical reference plane.
3. The angle of rotation of the face shall be determined by a line perpendicular to the theoretical face of the weld which passes through the axis of the weld. The reference position (0°) of rotation of the face invariably points in the direction opposite to that in which the axis angle increases. When looking at point P, the angle of rotation of the face of the weld shall be measured in a clockwise direction from the reference position (0°).

**Figure 3.2—Positions of Fillet Welds (see 3.4.1)**



Copyright American Welding Society
Provided by IHS under license with AWS
No reproduction or networking permitted without license from IHS
Licensee=University of Texas Revised Sub Account/5620001114
Not for Resale, 08/29/2012 23:44:22 MDT

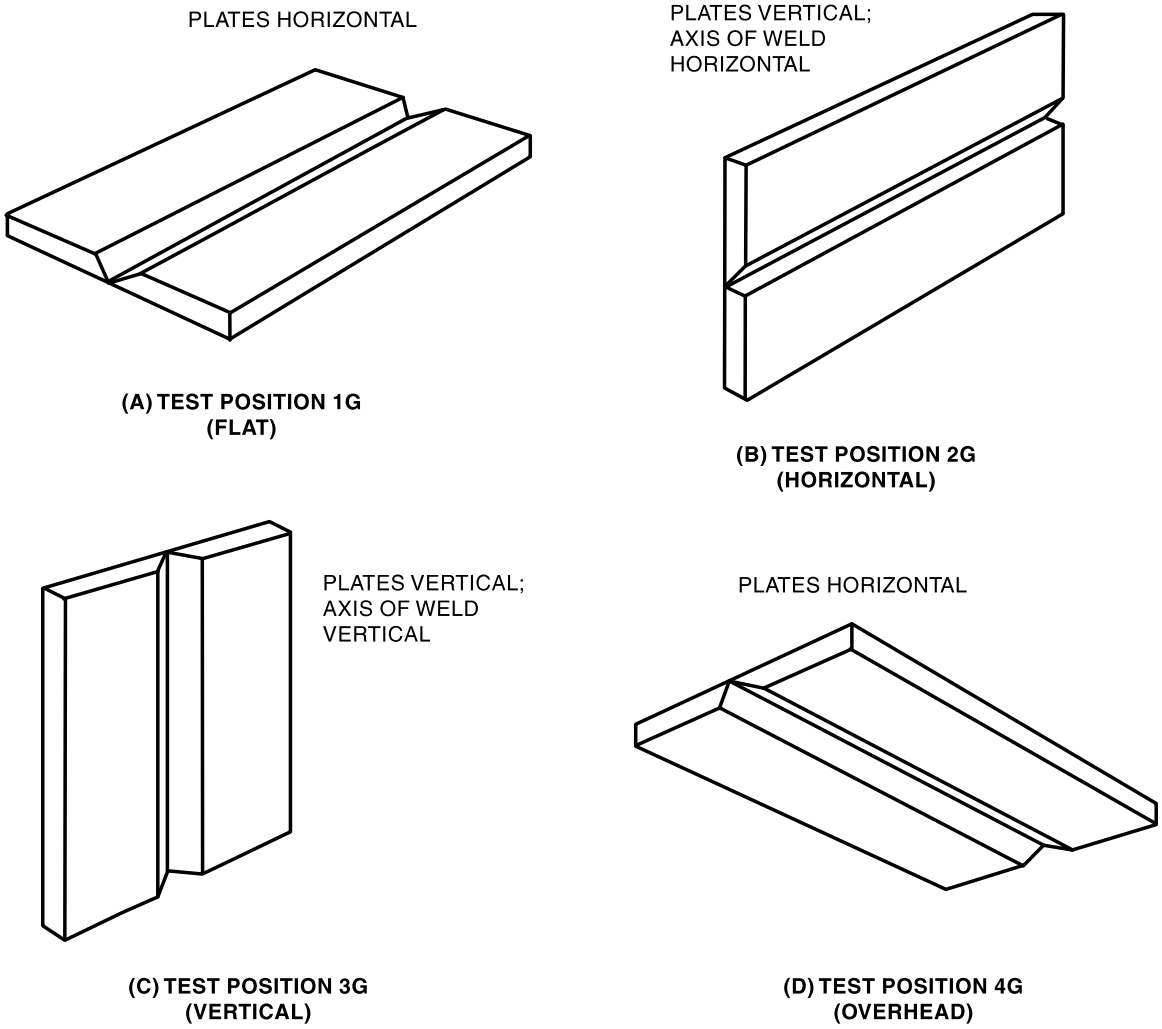


**Figure 3.3—Positions of Test Plates for Groove Welds (see 3.4.1.1)**



Copyright American Welding Society
Provided by IHS under license with AWS
No reproduction or networking permitted without license from IHS
Licensee=University of Texas Revised Sub Account/5620001114
Not for Resale, 08/29/2012 23:44:22 MDT

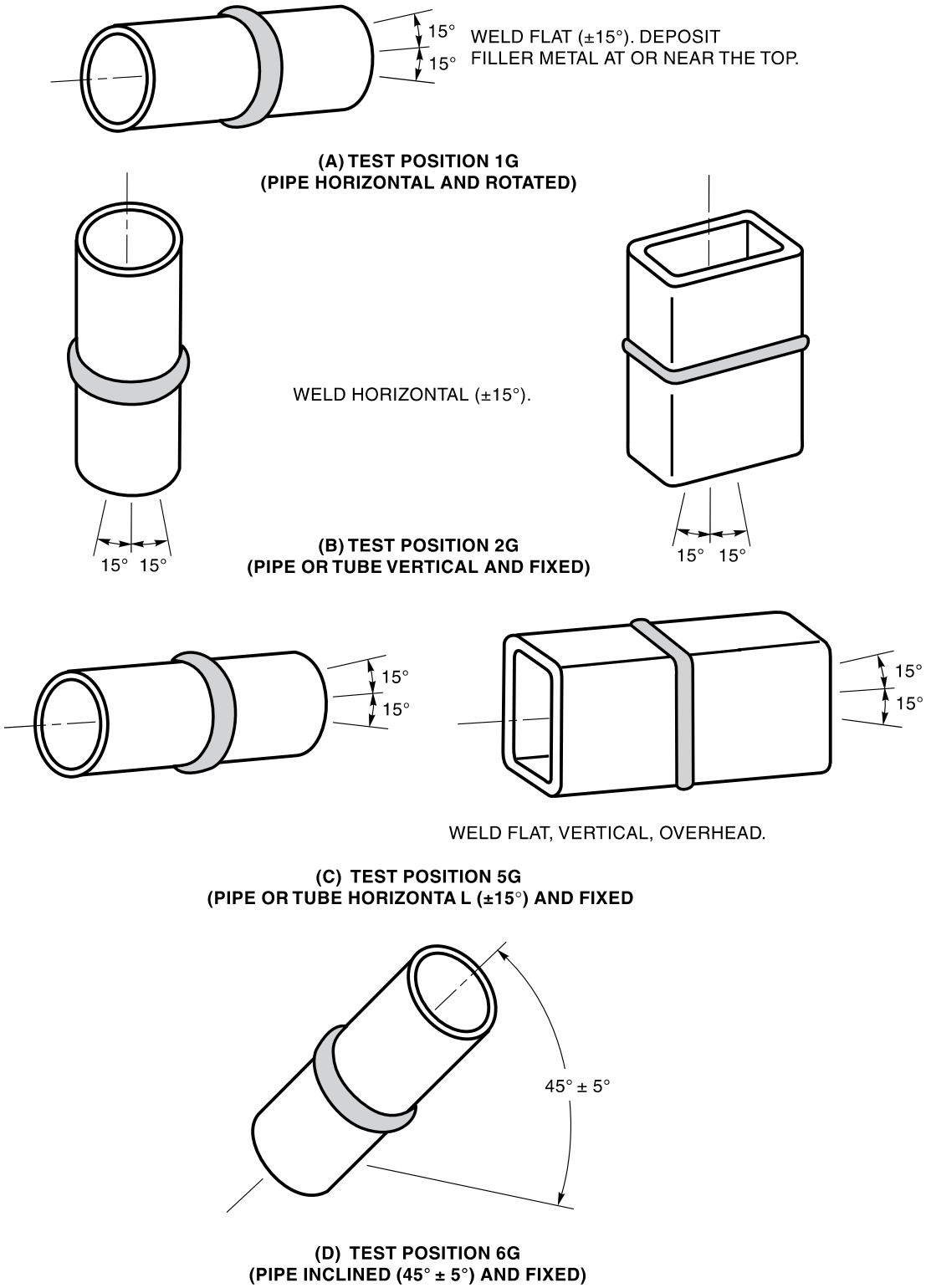


**Figure 3.4—Positions of Test Pipes for Groove Welds (see 3.4.1.2)**



Copyright American Welding Society
Provided by IHS under license with AWS
No reproduction or networking permitted without license from IHS
Licensee=University of Texas Revised Sub Account/5620001114
Not for Resale, 08/29/2012 23:44:22 MDT

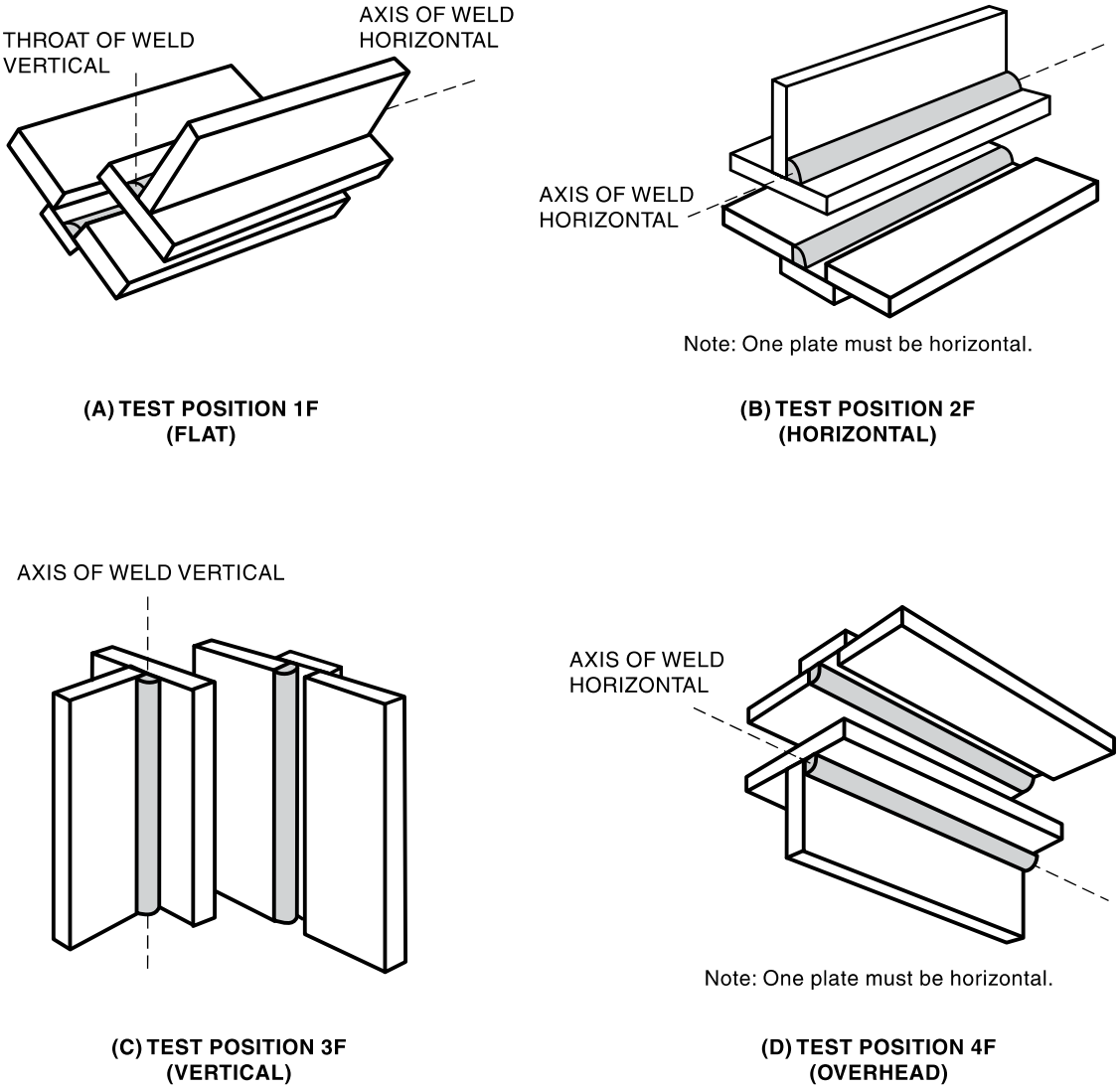


**Figure 3.5—Positions of Test Plates for Fillet Welds (see 3.4.1.3)**



Copyright American Welding Society
Provided by IHS under license with AWS
No reproduction or networking permitted without license from IHS
Licensee=University of Texas Revised Sub Account/5620001114
Not for Resale, 08/29/2012 23:44:22 MDT

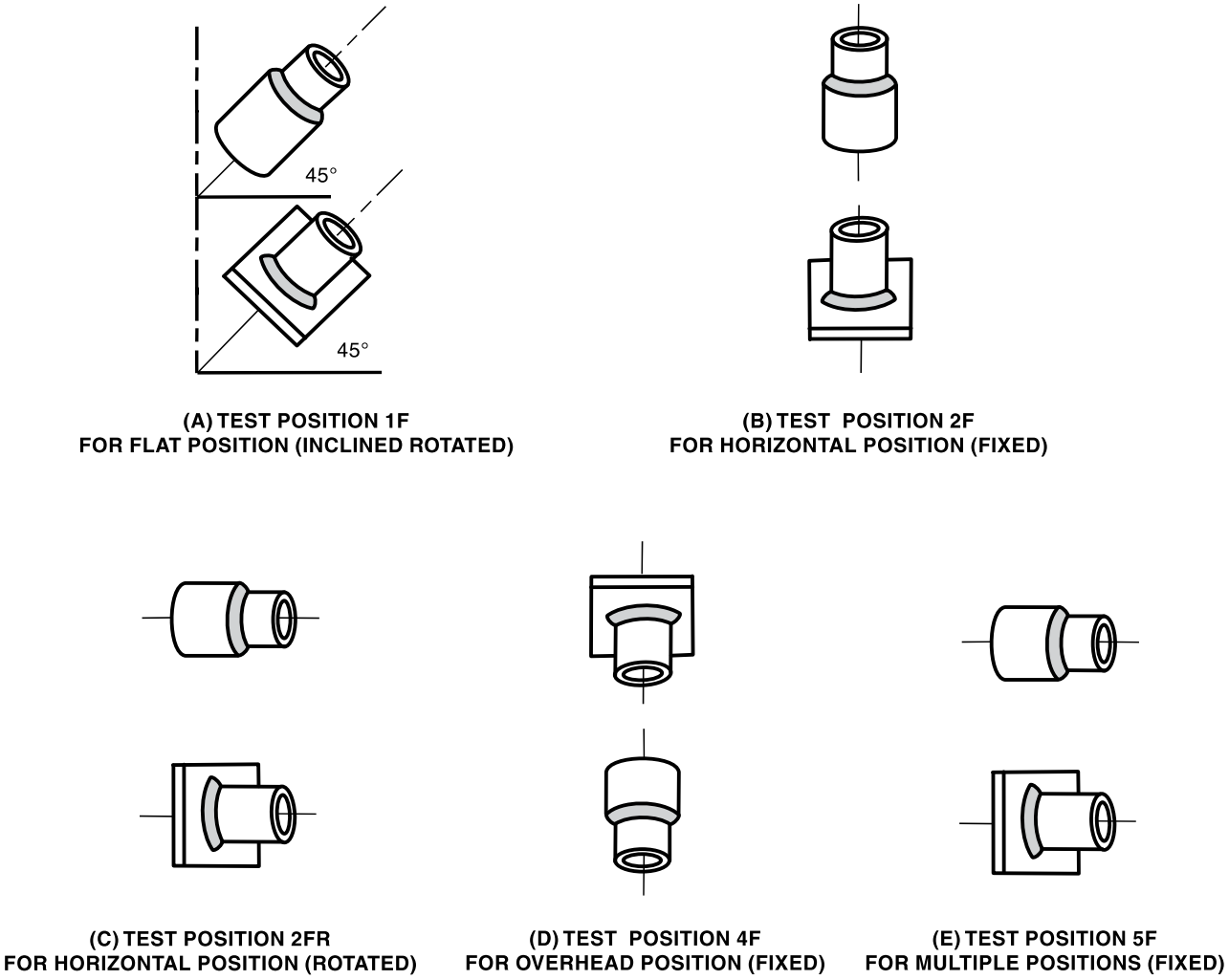


**Figure 3.6—Positions of Test Pipes for Fillet Welds (see 3.4.1.4)**



Copyright American Welding Society
Provided by IHS under license with AWS
No reproduction or networking permitted without license from IHS
Licensee=University of Texas Revised Sub Account/5620001114
Not for Resale, 08/29/2012 23:44:22 MDT

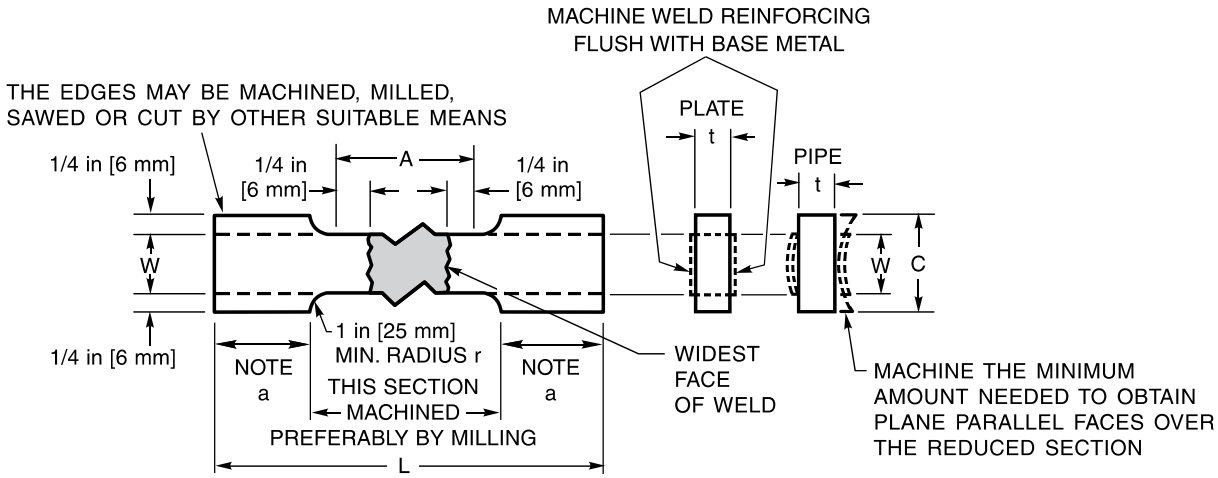


| Dimensions (in) | | | | |
|---|---|---|---|---|
| | Test Plate | | Test Pipe | |
| | Thickness ≤1 in | Thickness >1 in | 3 in or Smaller Diameter[g] | Greater than 3 in Diameter or Larger Job Size Pipe |
| A—Length of reduced section | Widest face of weld + 1/2 in, 2-1/4 min. | | Widest face of weld + 1/2 in | |
| L—Overall length, min.[b] | As required by testing equipment | | As required by testing equipment | |
| W—Width of reduced section[c, d] | 1-1/2 in ± 0.01 | 1 ± 0.01 | 1/2 ± 0.01 | 3/4 ± 0.01 |
| C—Width of grip section, min.[d, e] | 2 | 1-1/2 | 1 approx. | 1-1/4 approx. |
| t—Specimen thickness | Thickness | Thickness/n[f] | Maximum possible with plane parallel faces within length A | |
| r—Radius of fillet, min. | 1 | 1 | 1 | 1 |

| Dimensions (mm) | | | | |
|---|---|---|---|---|
| | Test Plate | | Test Pipe | |
| | Thickness ≤ 25 mm | Thickness >25 mm | 75 mm or Smaller Diameter[g] | Greater than 75 mm Diameter or Larger Job Size Pipe |
| A—Length of reduced section | Widest face of weld + 13 mm, 58 min. | | Widest face of weld + 13 mm | |
| L—Overall length, min.[b] | As required by testing equipment | | As required by testing equipment | |
| W—Width of reduced section[c, d] | 38 ± 0.25 | 25 ± 0.25 | 13 ± 0.25 | 19 ± 0.25 |
| C—Width of grip section, min.[d, e] | 51 | 38 | 25 approx. | 32 approx. |
| t—Specimen thickness | Thickness | Thickness/n[f] | Maximum possible with plane parallel faces within length A | |
| r—Radius of fillet, min. | 25 | 25 | 25 | 25 |

[a] It is desirable, if possible, to make the length of the grip section large enough to allow the specimen to extend into the grips a distance equal to two-thirds or more of the length of the grips.
[b] The ends of the reduced section shall not differ in width by more than 0.004 in [0.10 mm]. Also, there may be a gradual decrease in width from the ends to the center, but the width of either end shall not be more than 0.015 in [0.38 mm] larger than the width at the center.
[c] Narrower widths (W and C) may be used when necessary. In such cases, the width of the reduced section should be as large as the width of the material being tested allows. If the width of the material is less than W, the sides may be parallel throughout the length of the specimen.
[d] For standard plate-type specimens, the ends of the specimen shall be symmetrical with the center line of the reduced section within 0.25 in [6 mm] except for referee testing, in which case the ends of the specimen shall be symmetrical with the center line of the reduced section within 0.10 in [2.5 mm].
[e] The dimension t is the thickness of the specimen as provided for in the applicable material specifications. The minimum nominal thickness of 1-1/2 in [38 mm] wide specimens shall be 3/16 in [5 mm] except as allowed by the product specification.
[f] For plates over 1 in [25 mm] thick, specimens may be cut into the minimum number (n) of approximately equal strips not exceeding 1 in [25 mm] in thickness. Test each strip and each strip shall meet the tensile requirements.
[g] See 3.7.1.2(2) for alternate test specimen.

**Figure 3.7—Reduced Section Tension Specimens—Plate and Pipe (see 3.7.1.1 and 3.7.1.2)**



Copyright American Welding Society
Provided by IHS under license with AWS
No reproduction or networking permitted without license from IHS
Licensee=University of Texas Revised Sub Account/5620001114
Not for Resale, 08/29/2012 23:44:22 MDT

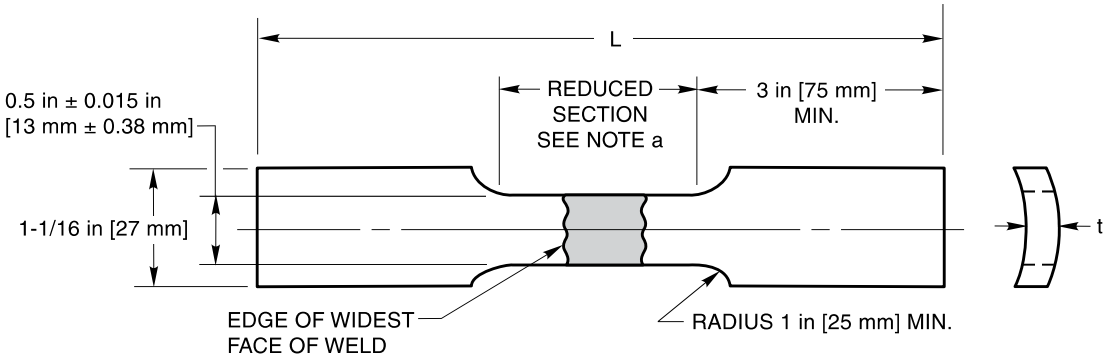


[a] The length of the reduced section shall not be less than the width of the welds plus two "t."

Notes:
1. Cross-sectional area = 0.5 × "t."
2. Test specimen thickness (t) shall be within the material thickness range allowed by the applicable material specification for the schedule/diameter of pipe being tested.
3. The specimen reduced section shall be parallel within 0.010 in [0.25 mm]. Specimen width may be gradually tapered provided the ends are no more than 0.010 in [0.25 mm] wider than the center.
4. Weld reinforcement shall be removed so that weld thickness does not exceed the base metal thickness.
5. Specimen edges shall not be arc or flame cut.

**Figure 3.8—Alternate Reduced Section Tension Specimen for Pipe (3 in [75 mm] Diameter or Less) [see 3.7.1.2(2)]**

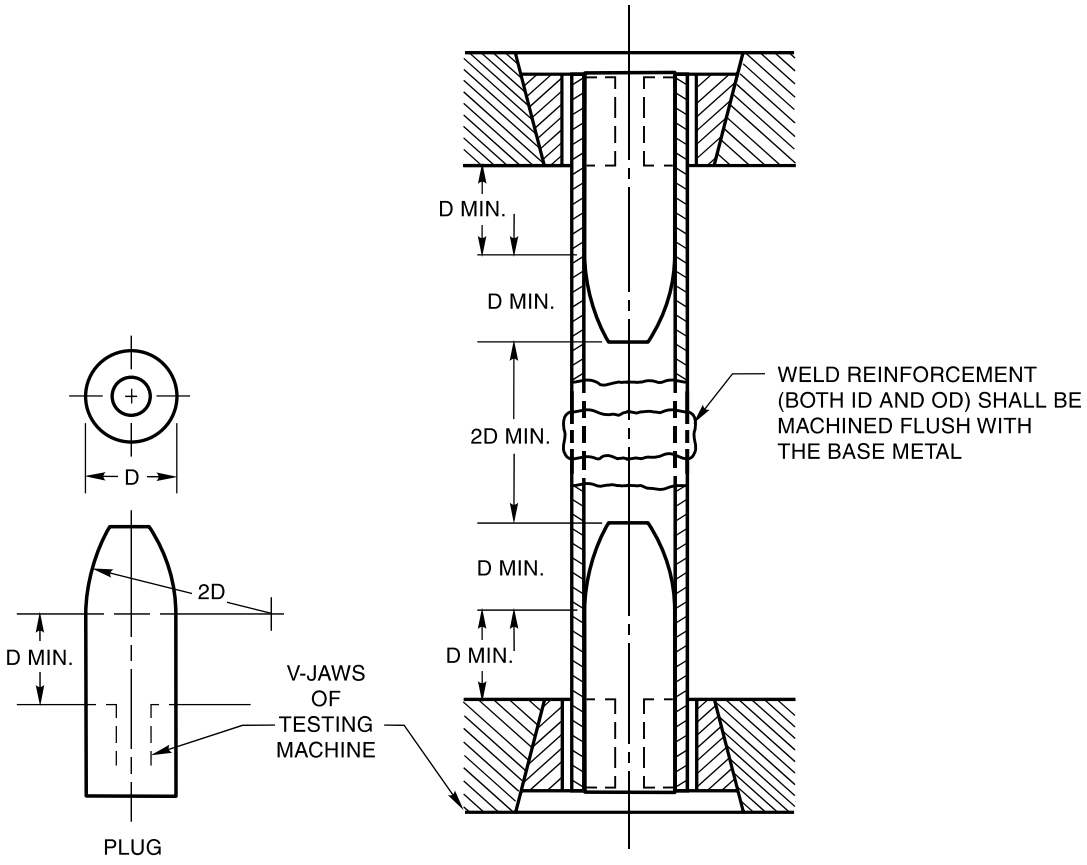


**Figure 3.9—Full Section Tension Specimens—Small Diameter Pipe (3 in [75 mm] Diameter or Less) (see 3.7.1.3)**



Copyright American Welding Society
Provided by IHS under license with AWS
No reproduction or networking permitted without license from IHS
Licensee=University of Texas Revised Sub Account/5620001114
Not for Resale, 08/29/2012 23:44:22 MDT

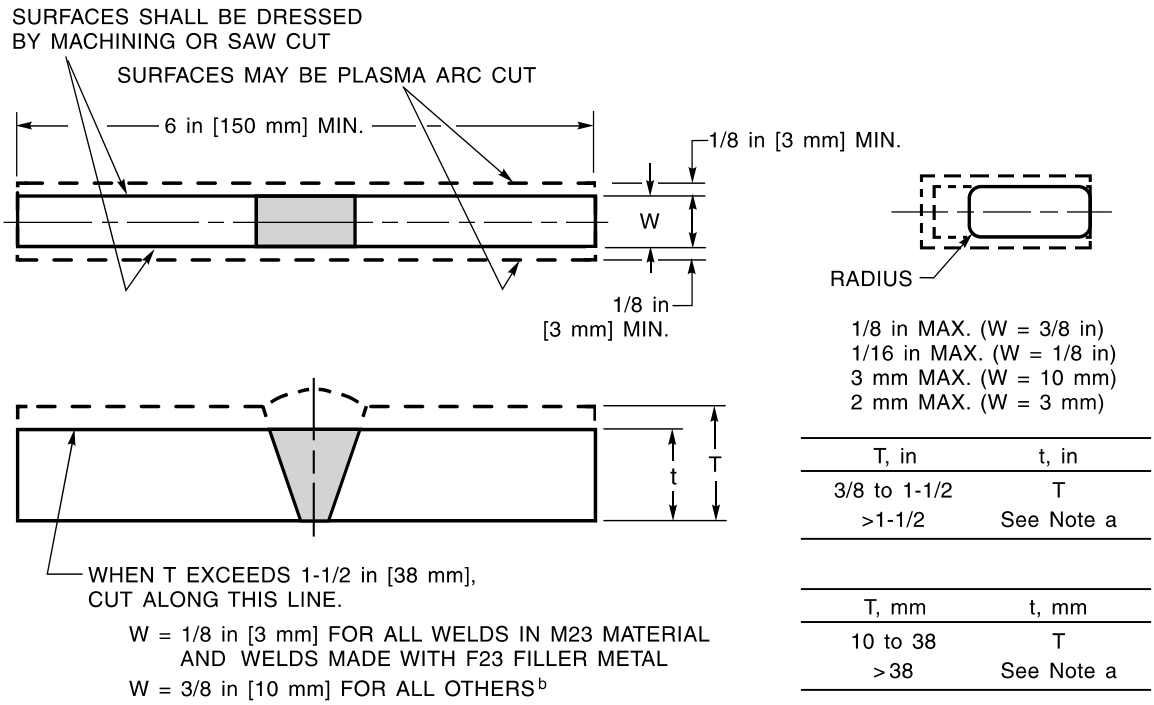


| T, in | t, in |
|---|---|
| 3/8 to 1-1/2 | T |
| >1-1/2 | See Note a |

| T, mm | t, mm |
|---|---|
| 10 to 38 | T |
| >38 | See Note a |

[a] For plates over 1-1/2 in [38 mm] thick, cut the specimen into approximately equal strips with T between 3/4 in [20 mm] and 1-1/2 in [38 mm] and test each strip.
[b] If M23 materials are annealed before testing they shall be tested in this thickness category.

Notes:
1. Saw cut along line indicated.
2. May be bent full width (see requirements on jig width, 3.8.2.3).

**Figure 3.10—Transverse Side Bend Specimens (see 3.8.1.1)**



Copyright American Welding Society
Provided by IHS under license with AWS
No reproduction or networking permitted without license from IHS
Licensee=University of Texas Revised Sub Account/5620001114
Not for Resale, 08/29/2012 23:44:22 MDT

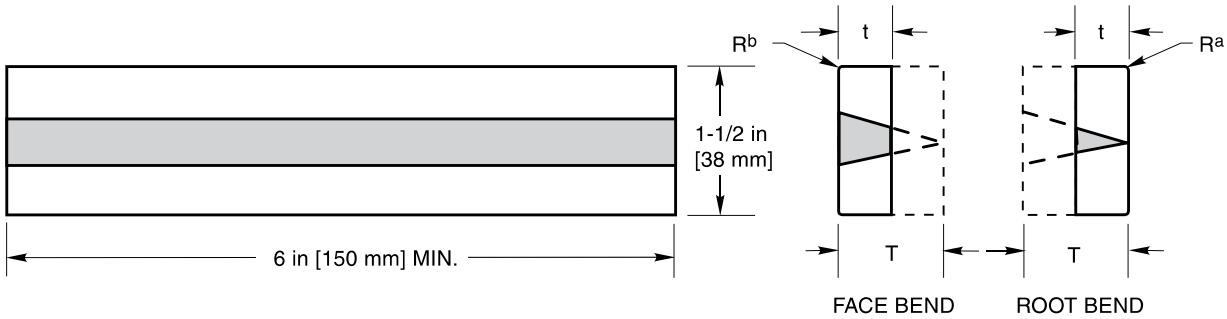


| | t, in | |
|---|---|---|
| T, in | WELDS IN M23 MATERIAL AND WELDS MADE WITH F23 FILLER METAL | ALL OTHER MATERIALS[b] |
| <1/8 | T | T |
| 1/8–3/8 | 1/8 | T |
| >3/8 | 1/8 | 3/8 |

| | t, mm | |
|---|---|---|
| T, mm | WELDS IN M23 MATERIAL AND WELDS MADE WITH F23 FILLER METAL | ALL OTHER MATERIALS[b] |
| <3 | T | T |
| 3–10 | 3 | T |
| >10 | 3 | 10 |

[a] R = 1/2 t max. for t ≤ 1/4 in [6 mm].
R = 1/8 in [3 mm] max. for t > 1/4 in [6 mm].
[b] If M23 materials are annealed before testing they shall be tested in this thickness category.

Note: Weld reinforcements and backing strip or backing ring, if any, shall be removed essentially flush with the undisturbed surface of the base material. If a recessed strip is used, this surface of the specimen may be machined to a depth not exceeding the depth of the recess to remove the strip, except that in such cases the thickness of the finished specimen shall be that specified above.

**Figure 3.11—Longitudinal Face and Root Bend Specimens (see 3.8.1.5 and 3.8.1.6)**



Copyright American Welding Society
Provided by IHS under license with AWS
No reproduction or networking permitted without license from IHS
Licensee=University of Texas Revised Sub Account/5620001114
Not for Resale, 08/29/2012 23:44:22 MDT

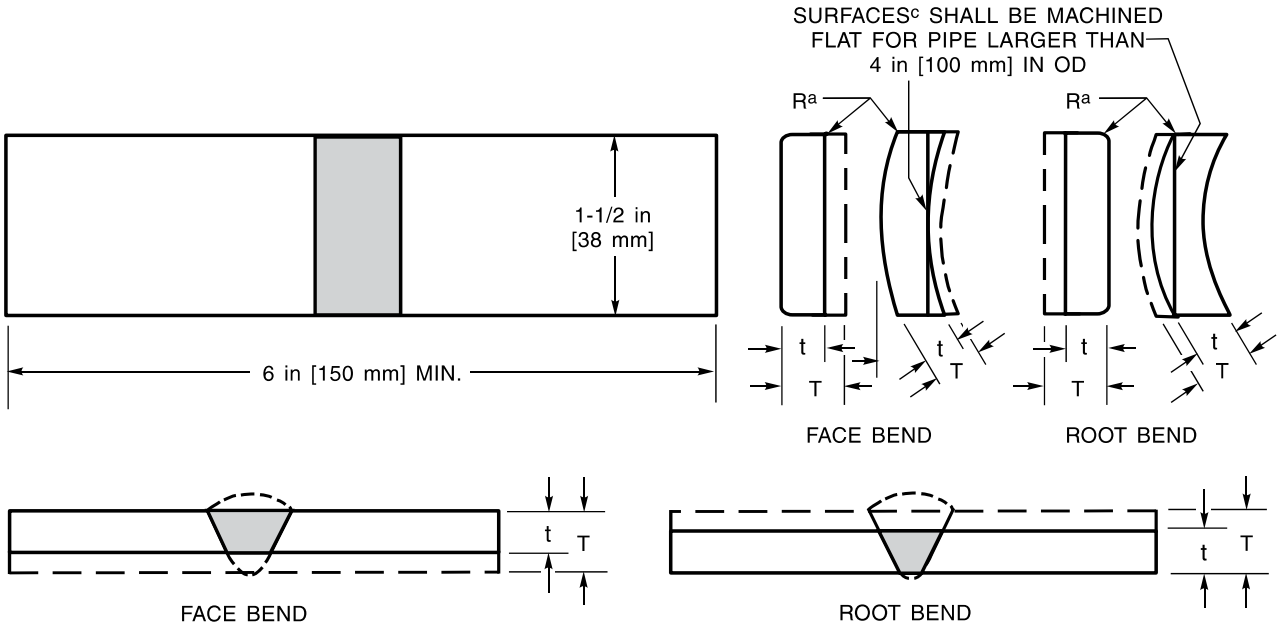


| T, in | t, in: WELDS IN M23 MATERIAL AND WELDS MADE WITH F23 FILLER METAL | t, in: ALL OTHER MATERIALS[b] |
|---|---|---|
| <1/8 | T | T |
| 1/8–3/8 | 1/8 | T |
| >3/8 | 1/8 | 3/8 |

| T, mm | t, mm: WELDS IN M23 MATERIAL AND WELDS MADE WITH F23 FILLER METAL | t, mm: ALL OTHER MATERIALS[b] |
|---|---|---|
| <3 | T | T |
| 3–10 | 3 | T |
| >10 | 3 | 10 |

[a] R = 1/2 t max. for t ≤ 1/4 in [6 mm].
R = 1/8 in [3 mm] max. for t > 1/4 in [6 mm]
[b] If M23 materials are annealed before testing they shall be tested in this thickness category.
[c] Surfaces shall be machined flat for pipe larger than 4 in [100 mm] OD. Curvature shall remain where pipe is 4 in [100 mm] or less OD.

Notes:
1. Weld reinforcement and backing strip or backing ring, if any, shall be removed flush with the surface of the specimen. If a recessed ring is used, this surface of the specimen may be machined to a depth not exceeding the depth of the recess to remove the ring, except that in such cases the thickness of the finished specimen shall be that specified above. Do not flame-cut aluminum material.
2. If the pipe being tested is 4 in [100 mm] outside diameter or less, the width of the bend specimen may be 3/4 in [20 mm], measured around the outside surface. Alternatively, if the pipe being tested is less than 2 in [50 mm] pipe size (2-3/8 in [60 mm] outside diameter), the width of the bend specimens may be that obtained by cutting the pipe into quarter sections, less an allowance for saw cuts or machine cutting.
3. See 3.8.2.3.

**Figure 3.12—Transverse Face and Root Bend Specimens (see 3.8.1.2, 3.8.1.3, and 3.8.1.4)**



Copyright American Welding Society
Provided by IHS under license with AWS
No reproduction or networking permitted without license from IHS
Licensee=University of Texas Revised Sub Account/5620001114
Not for Resale, 08/29/2012 23:44:22 MDT

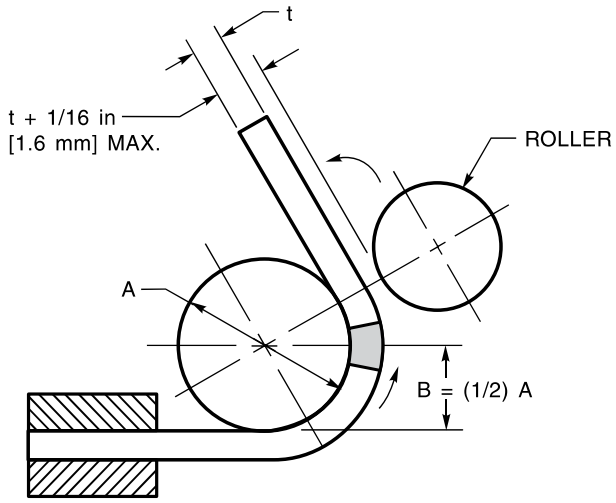


| Thickness of Specimen (in) | A, in | B, in | Materials |
|---|---|---|---|
| 3/8<br>t | 1-1/2<br>4t | 3/4<br>2t | M21 and M22 |
| 1/8<br>t (<1/8) | 2-1/16<br>16-1/2t | 1-1/32<br>8-1/4t | M23 and<br>F23 Welds |
| 3/8<br>t | 2-1/2<br>6-2/3t | 1-1/4<br>3-1/3t | M25 and<br>Annealed M23 |
| 3/8<br>t | 3<br>8t | 1-1/2<br>4t | M27 and<br>Annealed M24 |

| Thickness of Specimen (mm) | A, mm | B, mm | Materials |
|---|---|---|---|
| 10<br>t | 38<br>4t | 19<br>2t | M21 and M22 |
| 3<br>t (<3) | 52<br>16-1/2t | 26<br>8-1/4t | M23 and<br>F23 Welds |
| 10<br>t | 64<br>6-2/3t | 32<br>3-1/3t | M25 and<br>Annealed M23 |
| 10<br>t | 75<br>8t | 38<br>4t | M27 and<br>Annealed M24 |

Notes:

1. Wraparound guided bend jig is the preferred method of bend testing aluminum weldments (see Clause C-3.8).
2. Dimensions not shown are the option of the designer. The essential consideration is to have adequate rigidity so that the jig parts will not spring.
3. The specimen shall be firmly clamped on one end so that there is no sliding of the specimen during the bending operation.
4. Test specimens shall be removed from the jig when the outer roll has been removed 180° from the starting point.
5. See 3.8.1.7.
6. See 3.8.2.3.

**Figure 3.13—Wraparound Guided Bend Jig (see 3.8.2.1)**



Copyright American Welding Society
Provided by IHS under license with AWS
No reproduction or networking permitted without license from IHS
Licensee=University of Texas Revised Sub Account/5620001114
Not for Resale, 08/29/2012 23:44:22 MDT

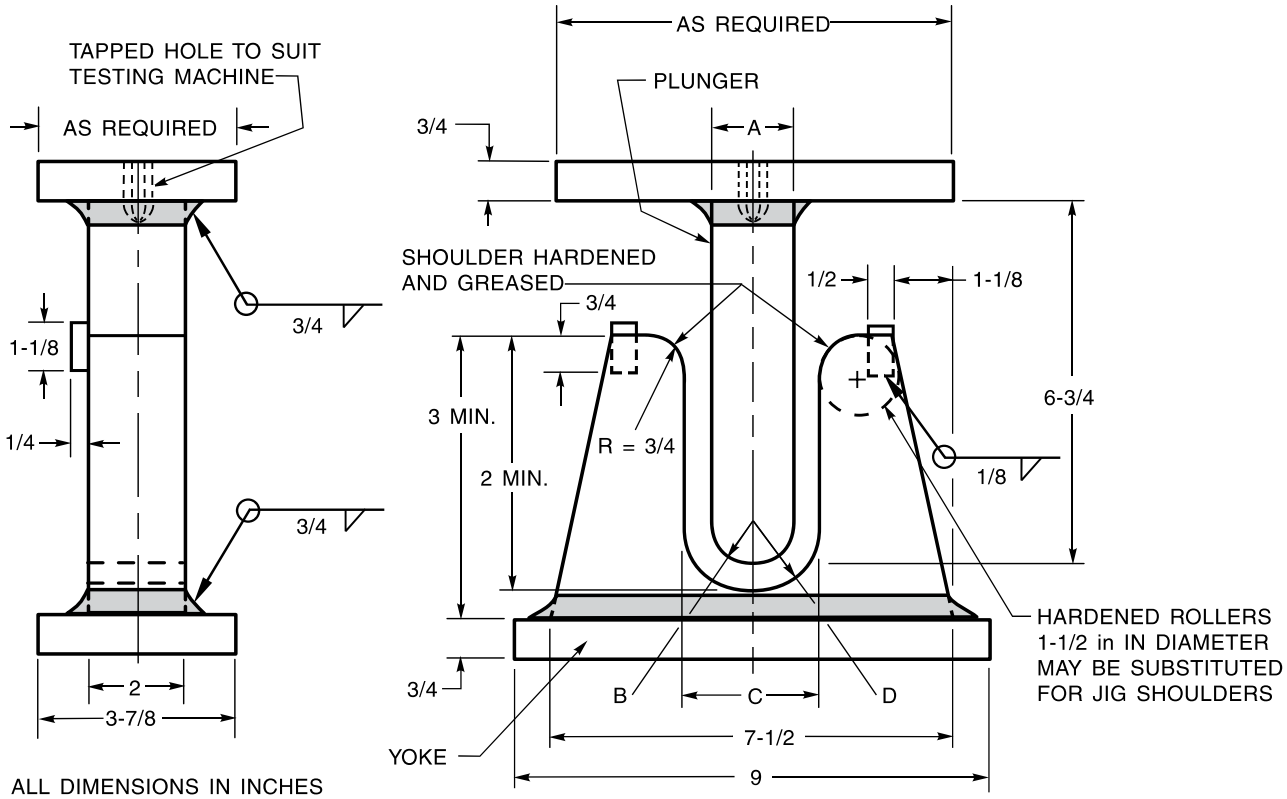


| Thickness of Specimen (in) | A, in | B, in | C, in | D, in | Materials |
|---|---|---|---|---|---|
| 3/8<br>t | 1-1/2<br>4t | 3/4<br>2t | 2-3/8<br>6t + 1/8 | 1-3/16<br>3t + 1/16 | M21 and M22 |
| 1/8<br>t (<1/8) | 2-1/16<br>16-1/2t | 1-1/32<br>8-1/4t | 2-3/8<br>18-1/2t + 1/16 | 1-3/16<br>9-1/4t + 1/32 | M23 and<br>F23 Welds |
| 3/8<br>t | 2-1/2<br>6-2/3t | 1-1/4<br>3-1/3t | 3-3/8<br>8-2/3t + 1/8 | 1-11/16<br>4-1/3t + 1/16 | M25 and<br>Annealed M23 |
| 3/8<br>t | 3<br>8t | 1-1/2<br>4t | 3-7/8<br>10t + 1/8 | 1-15/16<br>5t + 1/16 | M27 and<br>Annealed M24 |

Notes:
1. See 3.8.1.7.
2. See 3.8.2.3.

**Figure 3.14—Plunger-Type Guided Bend Jig (see 3.8.2.2)**
**(Dimensions in Inches)**



Copyright American Welding Society
Provided by IHS under license with AWS
No reproduction or networking permitted without license from IHS
Licensee=University of Texas Revised Sub Account/5620001114
Not for Resale, 08/29/2012 23:44:22 MDT

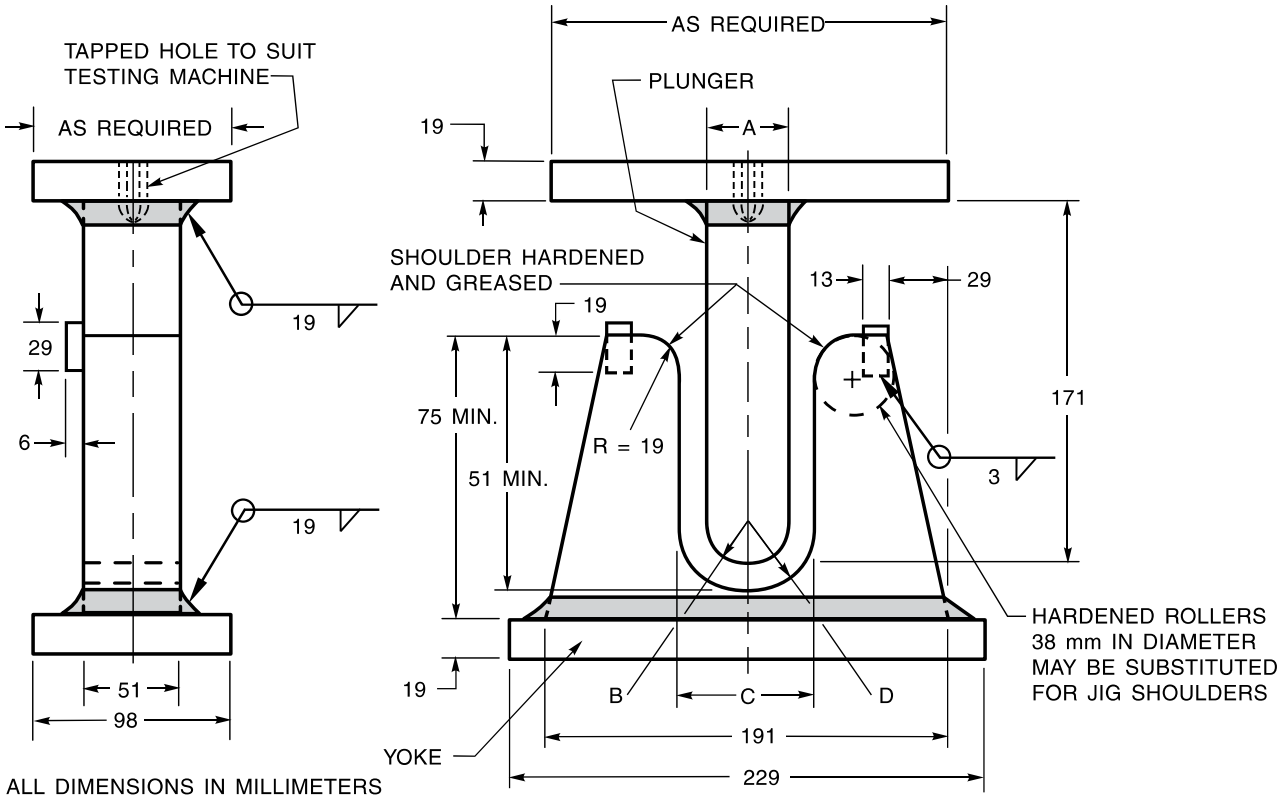


| Thickness of Specimen (mm) | A, mm | B, mm | C, mm | D, mm | Materials |
|---|---|---|---|---|---|
| 10<br>t | 38<br>4t | 19<br>2t | 60<br>6t + 3 | 30<br>3t + 1.6 | M21 and M22 |
| 3<br>t (<3) | 52<br>16-1/2t | 26<br>8-1/4t | 60<br>18-1/2t + 1.6 | 30<br>9-1/4t + 1 | M23 and<br>F23 Welds |
| 10<br>t | 64<br>6-2/3t | 32<br>3-1/3t | 86<br>8-2/3t + 3 | 43<br>4-1/3t + 1.6 | M25 and<br>Annealed M23 |
| 10<br>t | 75<br>8t | 38<br>4t | 98<br>10t + 3 | 49<br>5t + 1.6 | M27 and<br>Annealed M24 |

Notes:
1. See 3.8.1.7.
2. See 3.8.2.3.

**Figure 3.14 (Continued)—Plunger-Type Guided Bend Jig (see 3.8.2.2)**
**(Dimensions in Millimeters)**



Copyright American Welding Society
Provided by IHS under license with AWS
No reproduction or networking permitted without license from IHS
Licensee=University of Texas Revised Sub Account/5620001114
Not for Resale, 08/29/2012 23:44:22 MDT

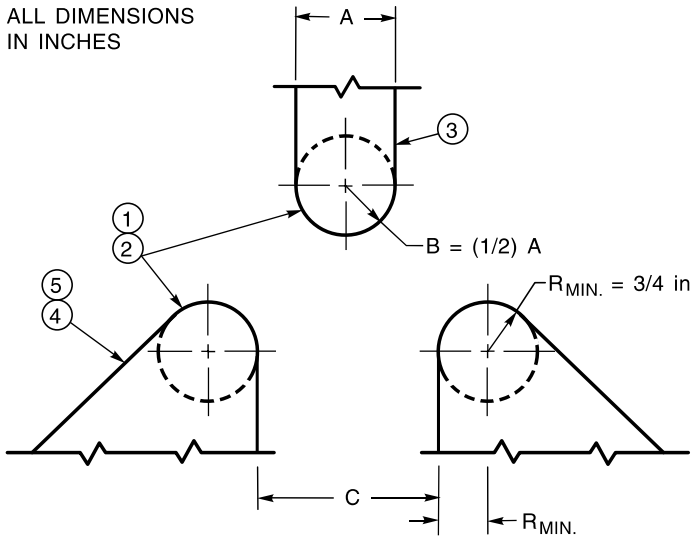


| Thickness of Specimen (in) | A, in | B, in | C, in | Materials |
|---|---|---|---|---|
| 3/8<br>t | 1-1/2<br>4t | 3/4<br>2t | 2-3/8<br>6t + 1/8 | M21 and M22 |
| 1/8<br>t (<1/8) | 2-1/16<br>16-1/2t | 1-1/32<br>8-1/4t | 2-3/8<br>18-1/2t + 1/16 | M23 and<br>F23 Welds |
| 3/8<br>t | 2-1/2<br>6-2/3t | 1-1/4<br>3-1/3t | 3-3/8<br>8-2/3t + 1/8 | M25 and<br>Annealed M23 |
| 3/8<br>t | 3<br>8t | 1-1/2<br>4t | 3-7/8<br>10t + 1/8 | M27 and<br>Annealed M24 |

Notes:
1. See 3.8.1.7.
2. See 3.8.2.3.

**Figure 3.15—Roller-Type Guided Bend Jig (see 3.8.2.2)**
**(Dimensions in Inches)**



Copyright American Welding Society
Provided by IHS under license with AWS
No reproduction or networking permitted without license from IHS
Licensee=University of Texas Revised Sub Account/5620001114
Not for Resale, 08/29/2012 23:44:22 MDT

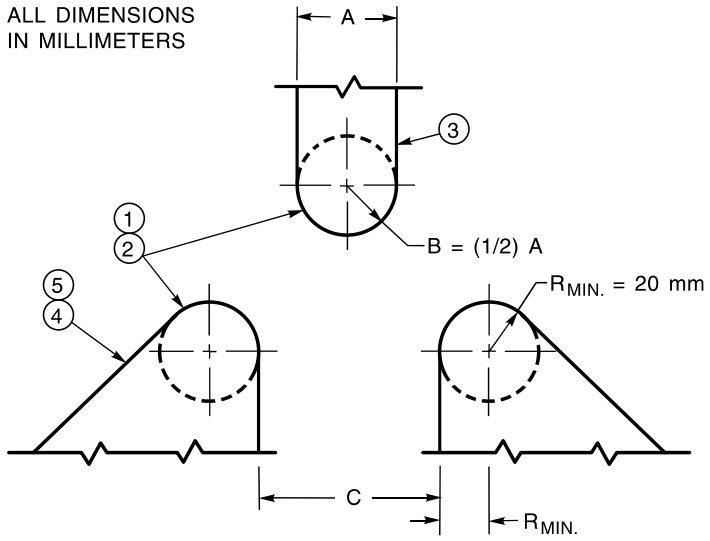


| Thickness of Specimen (mm) | A, mm | B, mm | C, mm | Materials |
|---|---|---|---|---|
| 10<br>t | 38<br>4t | 19<br>2t | 60<br>6t + 3 | M21 and M22 |
| 3<br>t (<3) | 52<br>16-1/2t | 26<br>8-1/4t | 60<br>18-1/2t + 1.6 | M23 and<br>F23 Welds |
| 10<br>t | 64<br>6-2/3t | 32<br>3-1/3t | 86<br>8-2/3t + 3 | M25 and<br>Annealed M23 |
| 10<br>t | 75<br>8t | 38<br>4t | 98<br>10t + 3 | M27 and<br>Annealed M24 |

Notes:
1. See 3.8.1.7.
2. See 3.8.2.3.

**Figure 3.15 (Continued)—Roller-Type Guided Bend Jig (see 3.8.2.2) (Dimensions in Millimeters)**



Copyright American Welding Society
Provided by IHS under license with AWS
No reproduction or networking permitted without license from IHS
Licensee=University of Texas Revised Sub Account/5620001114
Not for Resale, 08/29/2012 23:44:22 MDT

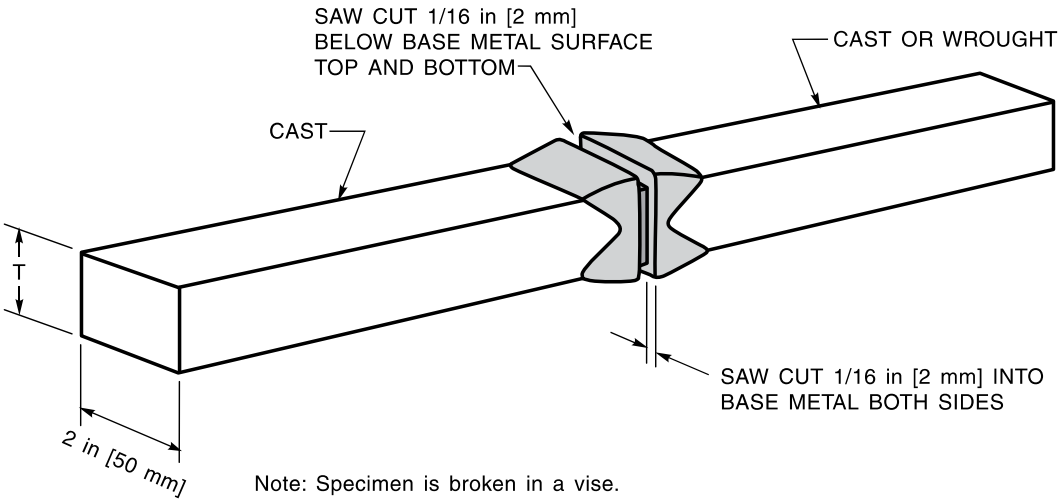


**Figure 3.16—Nick Break Fracture Test Specimen for WPS Qualification of Cast to Cast or Cast to Wrought Alloys (see 3.9.1)**



Copyright American Welding Society
Provided by IHS under license with AWS
No reproduction or networking permitted without license from IHS
Licensee=University of Texas Revised Sub Account/5620001114
Not for Resale, 08/29/2012 23:44:22 MDT

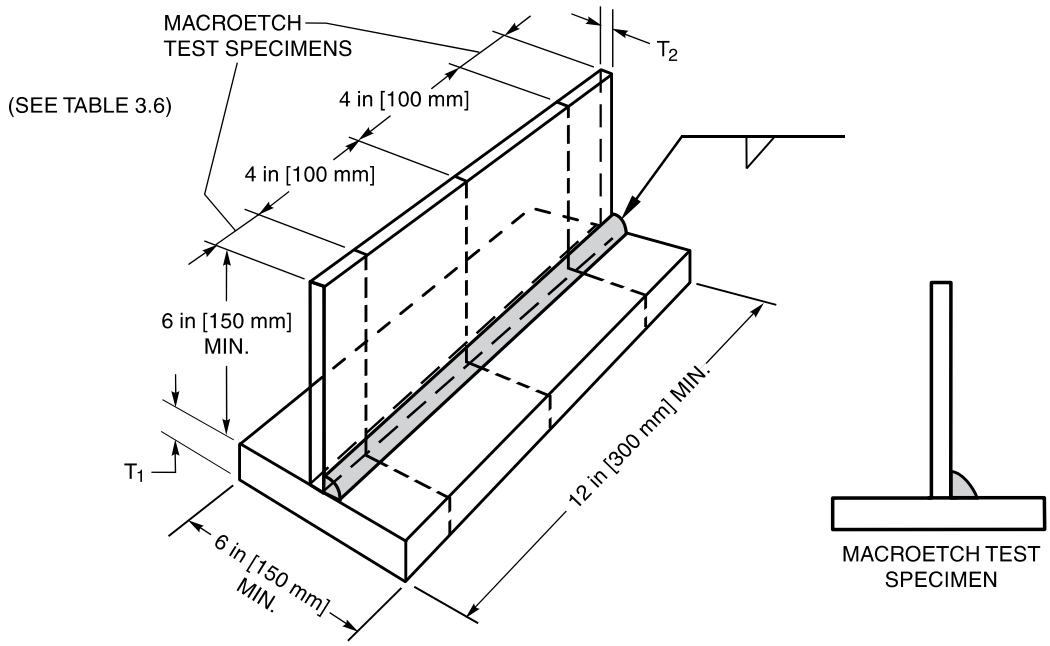


| Inches | | | Millimeters | | |
|---|---|---|---|---|---|
| Weld Size (W) | $T_1$ min.[a] | $T_2$ min.[a] | Weld Size (W) | $T_1$ min.[a] | $T_2$ min[a] |
| 3/16 | 1/2 | 3/16 | 5 | 13 | 5 |
| 1/4 | 3/4 | 1/4 | 6 | 19 | 6 |
| 5/16 | 1 | 5/16 | 8 | 25 | 8 |
| 3/8 | 1 | 3/8 | 10 | 25 | 10 |
| 1/2 | 1 | 1/2 | 13 | 25 | 13 |
| 5/8 | 1 | 5/8 | 16 | 25 | 16 |
| 3/4 | 1 | 3/4 | 19 | 25 | 19 |
| >3/4 | 1 | 1 | >19 | 25 | 25 |

[a] Where the maximum plate thickness used in production is less than the value shown in the table, the maximum thickness of the production pieces may be substituted for $T_1$ and $T_2$.

**Figure 3.17—Fillet Weld Soundness Test for WPS Qualification—Option 1—Plate (see 3.10.1.1)**



Copyright American Welding Society
Provided by IHS under license with AWS
No reproduction or networking permitted without license from IHS
Licensee=University of Texas Revised Sub Account/5620001114
Not for Resale, 08/29/2012 23:44:22 MDT

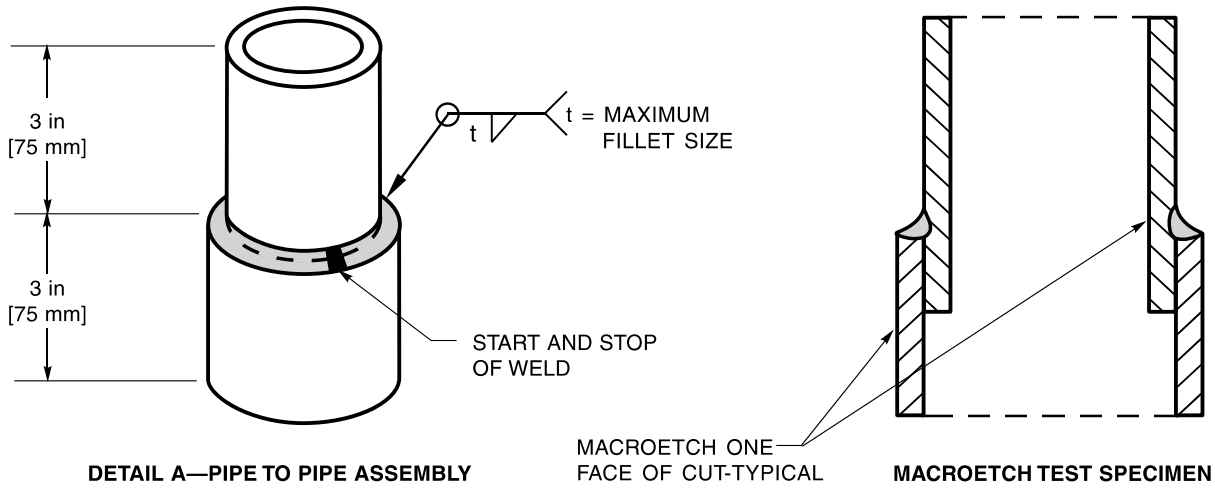


**DETAIL A—PIPE TO PIPE ASSEMBLY** **MACROETCH TEST SPECIMEN**

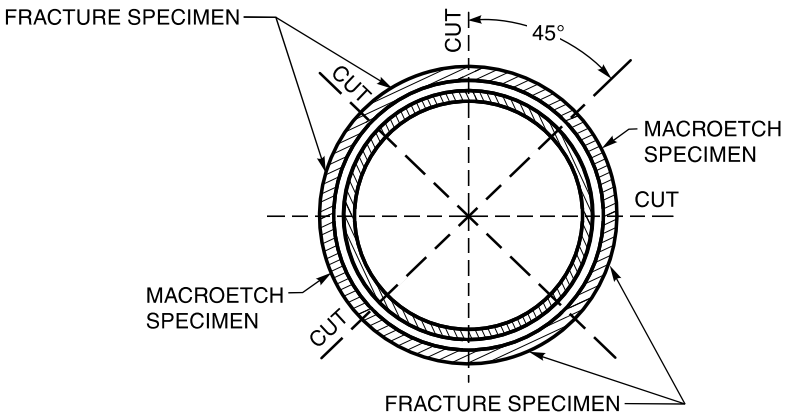


**LOCATION OF TEST SPECIMENS ON WELDED PIPE—WPS QUALIFICATION**

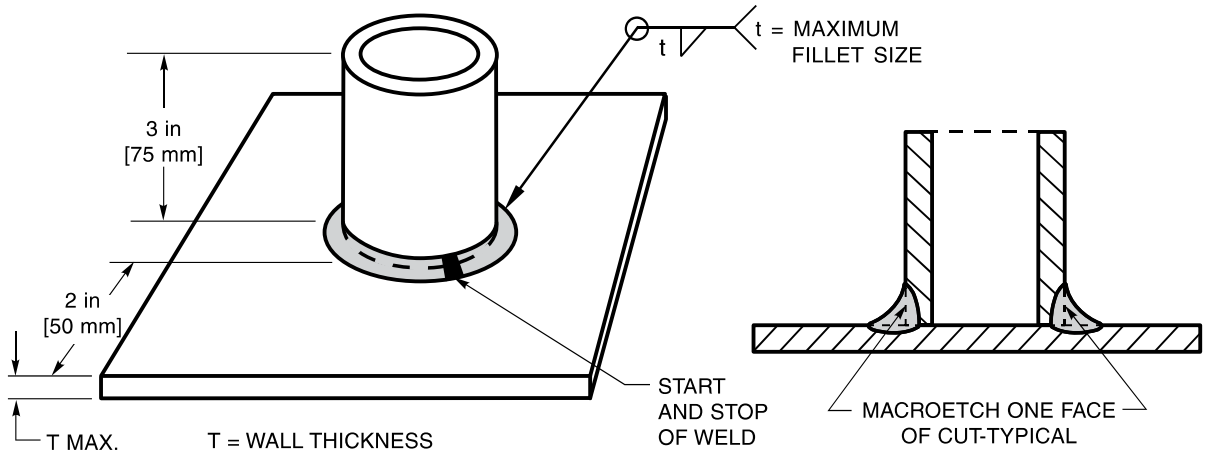


**DETAIL B—PIPE TO PLATE ASSEMBLY** **MACROETCH TEST SPECIMEN**

Notes:
1. See Table 3.3 for position requirements and Table 3.6 for test specimen requirements.
2. Pipe shall be of sufficient thickness to prevent melt-through.
3. All dimensions are minimums.

**Figure 3.18—Fillet Weld Soundness Test for WPS Qualification—Pipe (see 3.10.1.1)**



Copyright American Welding Society
Provided by IHS under license with AWS
No reproduction or networking permitted without license from IHS
Licensee=University of Texas Revised Sub Account/5620001114
Not for Resale, 08/29/2012 23:44:22 MDT

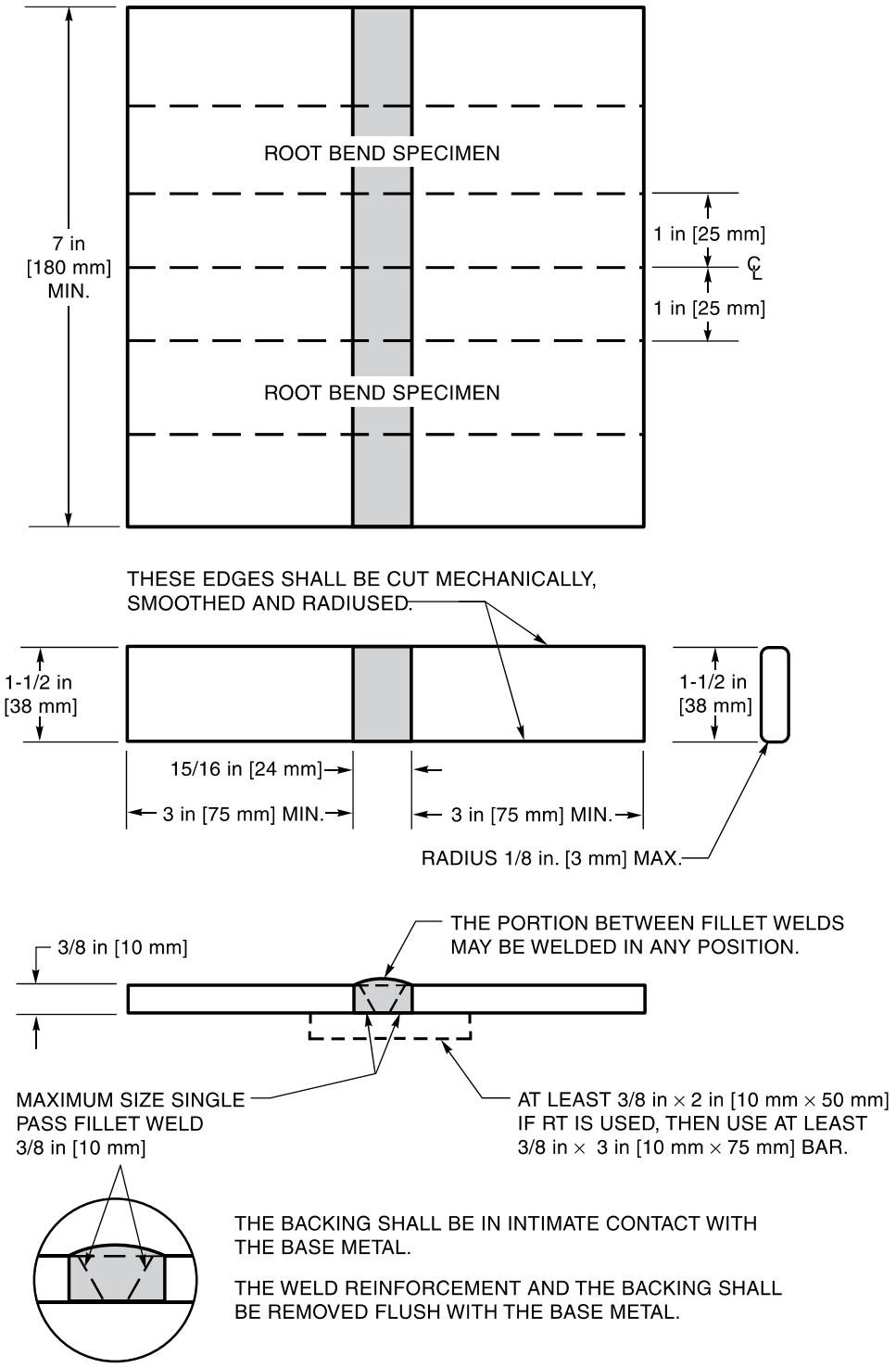


**Figure 3.19—Fillet Weld Soundness Test for WPS Qualification—Option 2—Root Bend Test—Plate (see 3.10.1.2 and 3.10.3.2)**



Copyright American Welding Society
Provided by IHS under license with AWS
No reproduction or networking permitted without license from IHS
Licensee=University of Texas Revised Sub Account/5620001114
Not for Resale, 08/29/2012 23:44:22 MDT

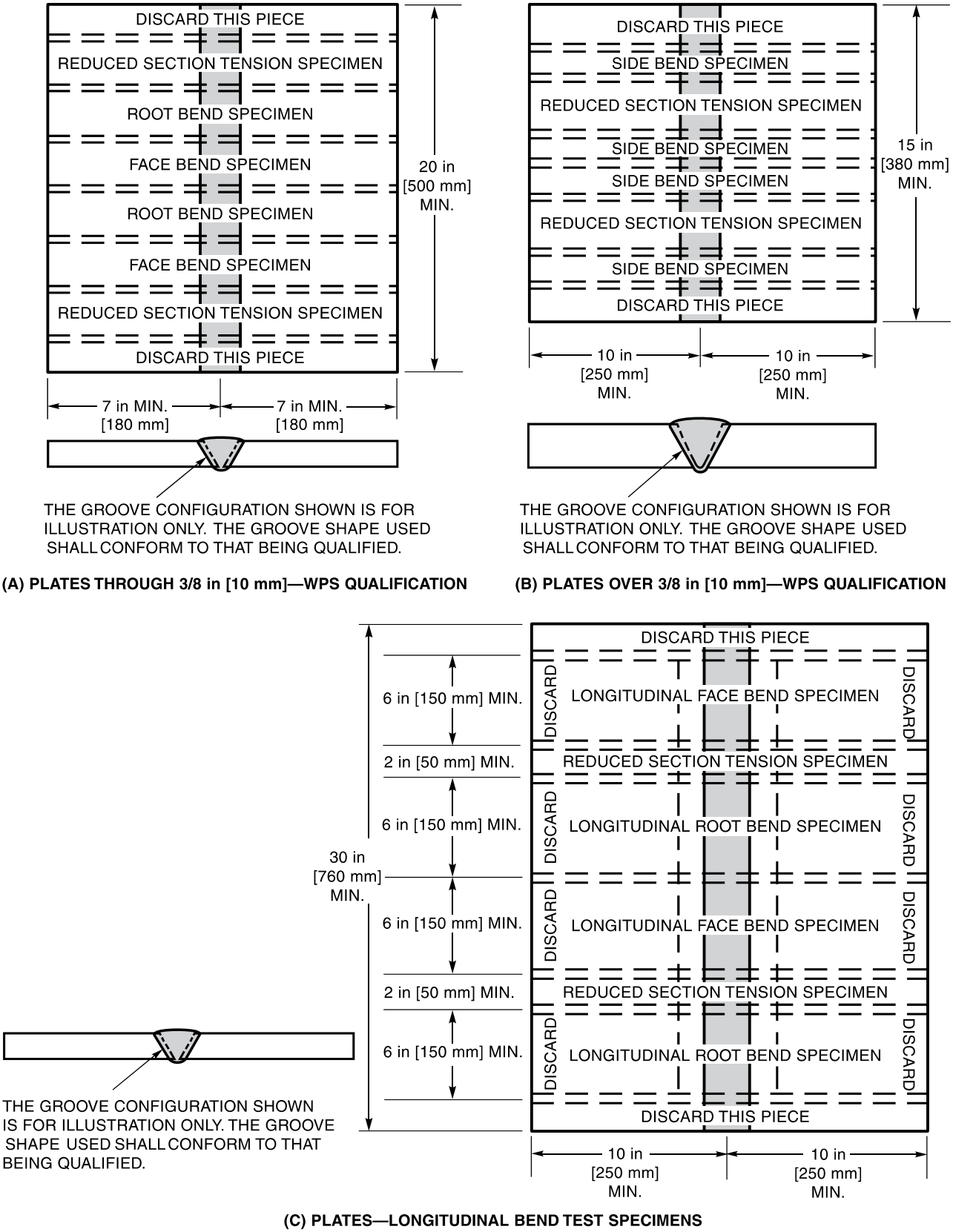


**Figure 3.20—Location of Test Specimens for WPS Qualification—Plate (see 3.9.1 and 3.15.5.1)**



Copyright American Welding Society
Provided by IHS under license with AWS
No reproduction or networking permitted without license from IHS
Licensee=University of Texas Revised Sub Account/5620001114
Not for Resale, 08/29/2012 23:44:22 MDT

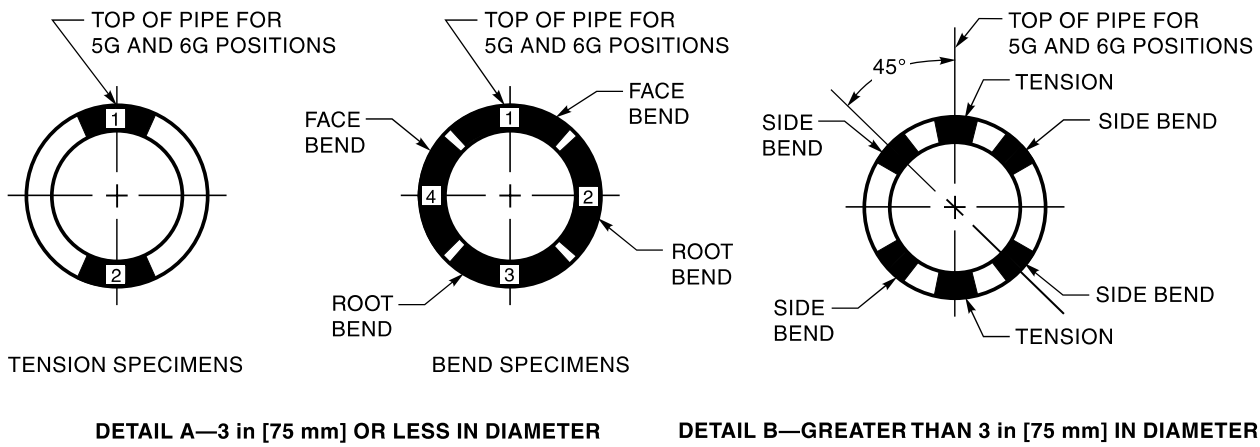


Note: Test weldments shall be 20 in [500 mm] minimum length.

**Figure 3.21—Location of Test Specimens for WPS Qualification—Pipe (see 3.9.1 and 3.15.6)**

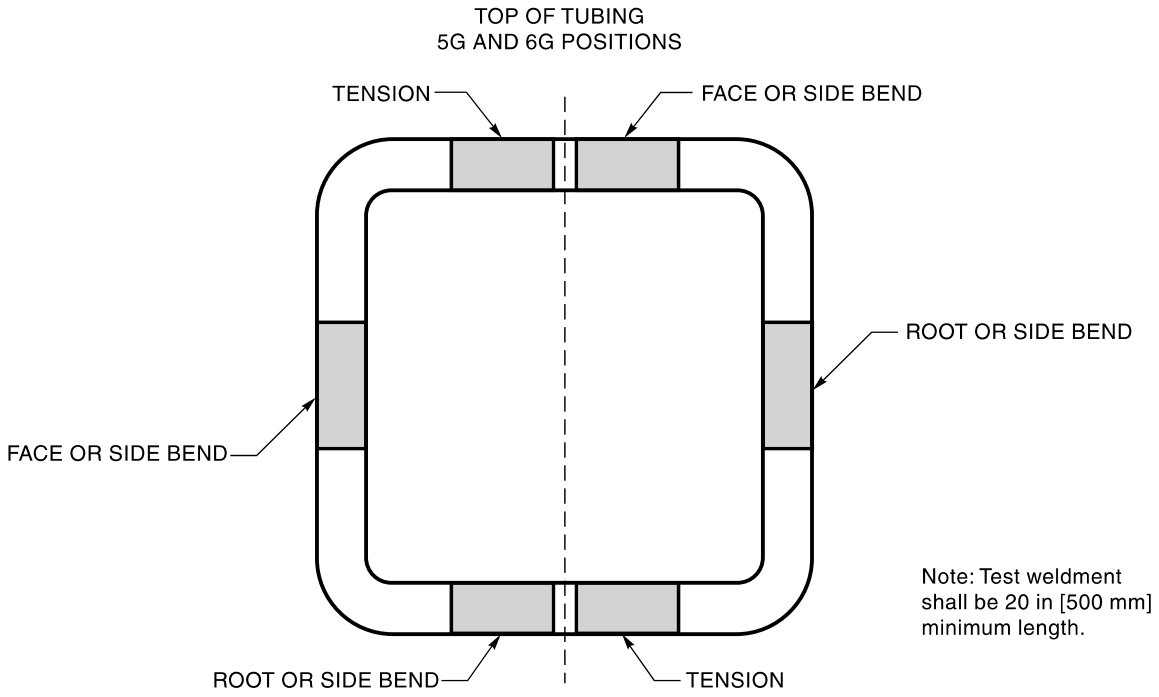


**Figure 3.22—Location of Test Specimens for WPS Qualification—Box Tubing (see 3.9.1 and 3.15.6)**



Copyright American Welding Society
Provided by IHS under license with AWS
No reproduction or networking permitted without license from IHS
Licensee=University of Texas Revised Sub Account/5620001114
Not for Resale, 08/29/2012 23:44:22 MDT

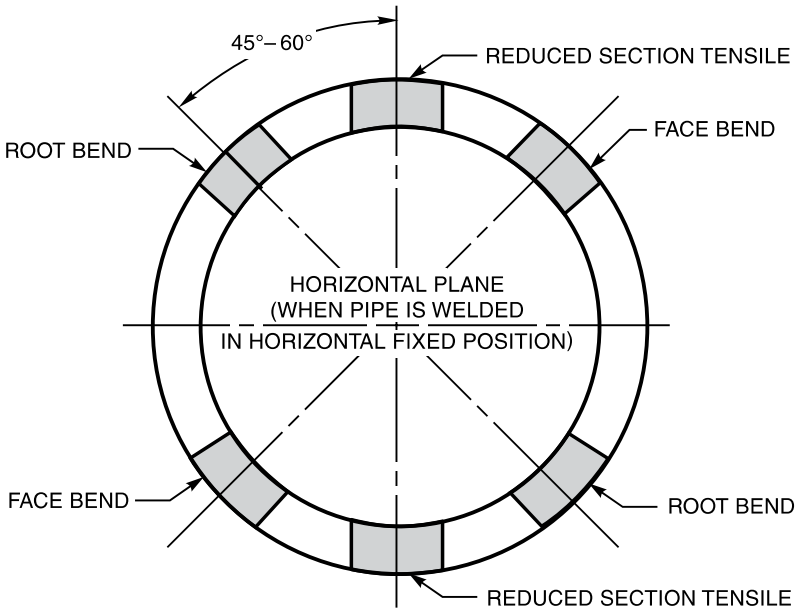


Note: Test weldment shall be 20 in [500 mm] minimum length.

**Figure 3.23—Location of Test Specimens for WPS Qualification—Job Size Pipe or Tubing 1/16 in through 3/8 in [2 mm through 10 mm] Wall Thickness (see 3.9.1 and 3.15.6)**

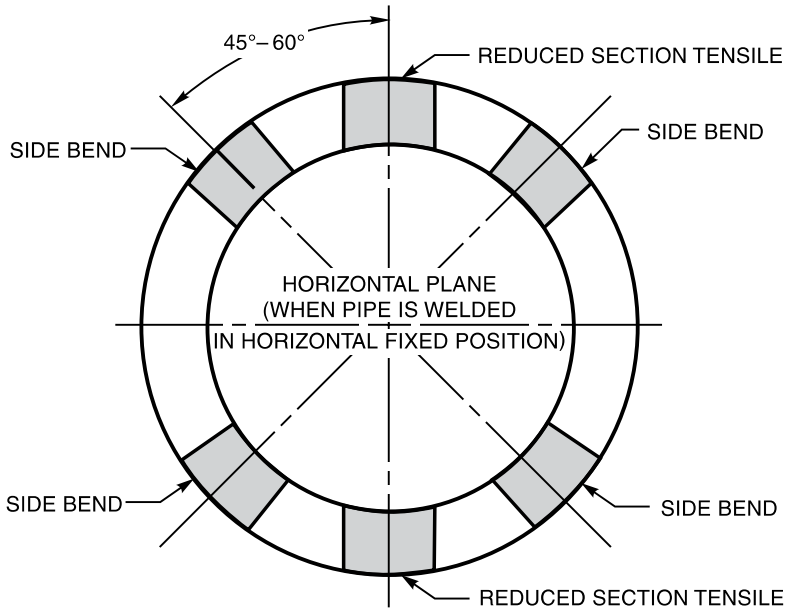


Note: Test weldment shall be 20 in [500 mm] minimum length.

**Figure 3.24—Location of Test Specimens for WPS Qualification—Job Size Pipe or Tubing Over 3/8 in [10 mm] Wall Thickness (see 3.9.1 and 3.15.6)**



Copyright American Welding Society
Provided by IHS under license with AWS
No reproduction or networking permitted without license from IHS
Licensee=University of Texas Revised Sub Account/5620001114
Not for Resale, 08/29/2012 23:44:22 MDT

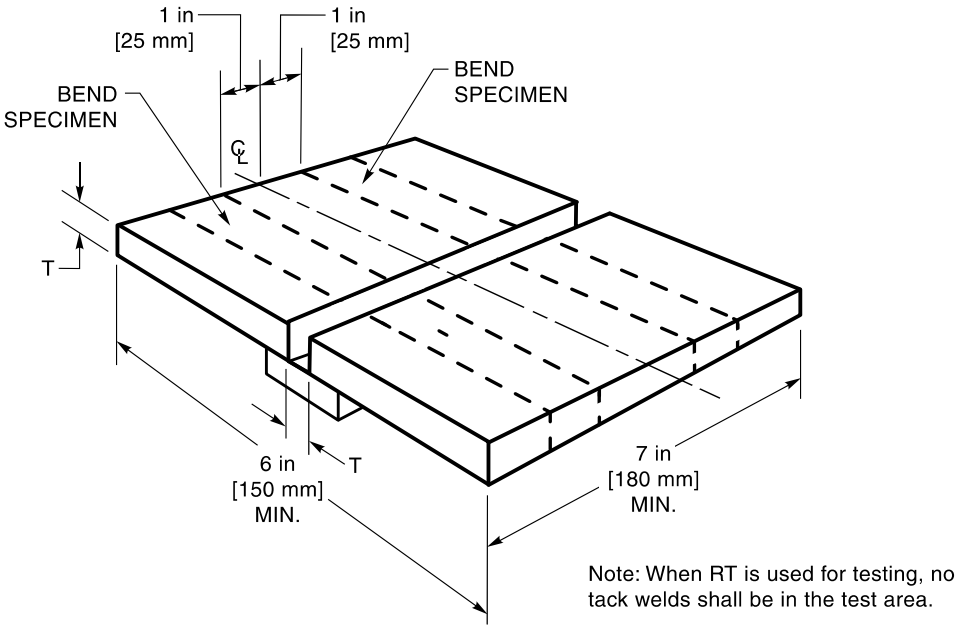


**Figure 3.25—Performance Qualification in All Positions—Plate Thickness T ≤ 1/8 in [3 mm] (see 3.19.1)**

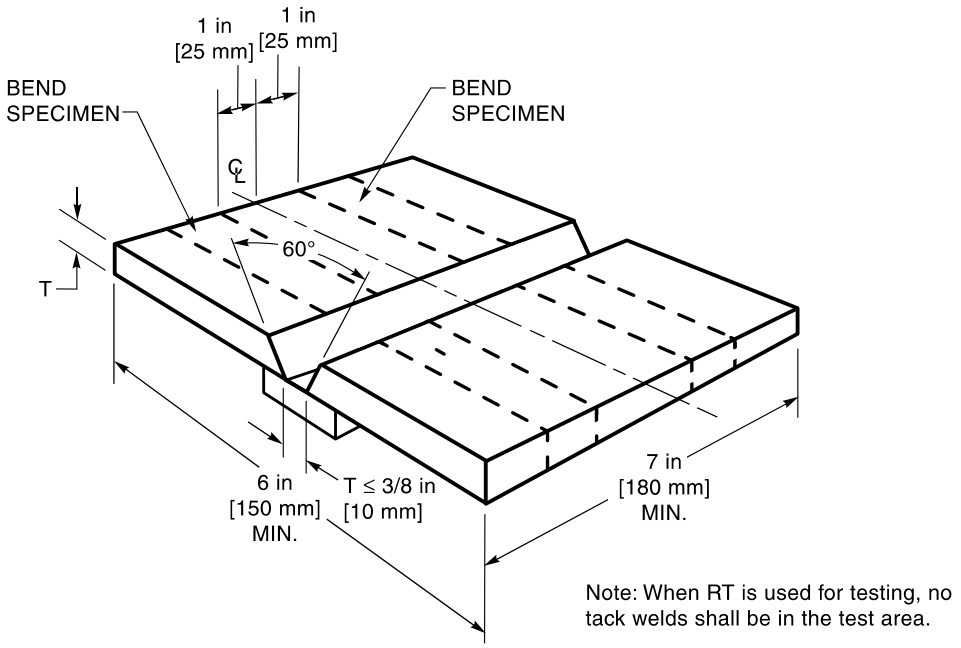


**Figure 3.26—Performance Qualification in All Positions—Plate Thickness T > 1/8 in [3 mm] (see 3.19.1)**



Copyright American Welding Society
Provided by IHS under license with AWS
No reproduction or networking permitted without license from IHS
Licensee=University of Texas Revised Sub Account/5620001114
Not for Resale, 08/29/2012 23:44:22 MDT

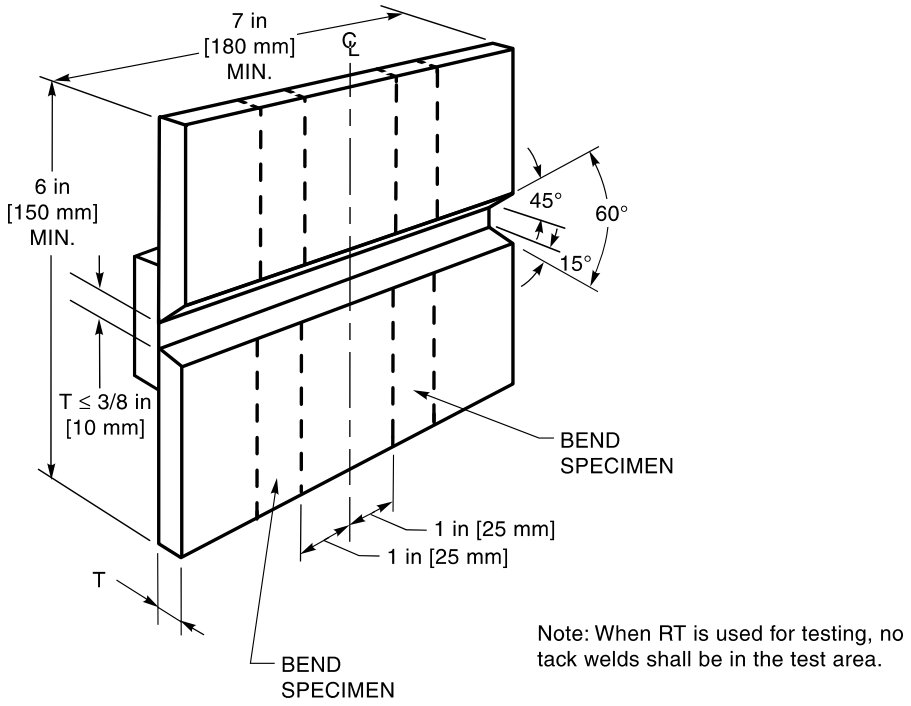


**Figure 3.27—Performance Qualification in the Horizontal Position—Plate Thickness T > 1/8 in [3 mm] (see 3.19.1)**

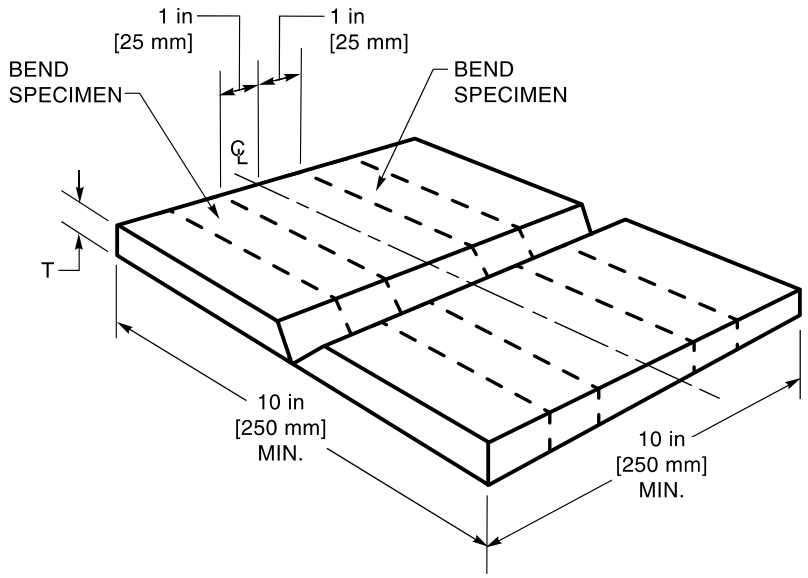


**Figure 3.28—Alternative Groove Weld Qualification Test Plate—All Thicknesses (see 3.19.2)**



Copyright American Welding Society
Provided by IHS under license with AWS
No reproduction or networking permitted without license from IHS
Licensee=University of Texas Revised Sub Account/5620001114
Not for Resale, 08/29/2012 23:44:22 MDT

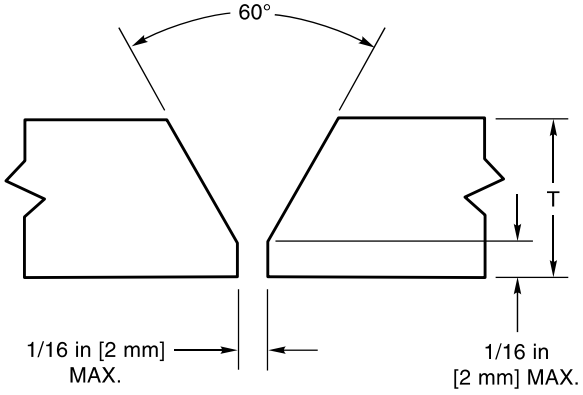


**Figure 3.29—Tubular Groove Weld—Performance Qualification—Without Backing (see 3.19.3(2))**

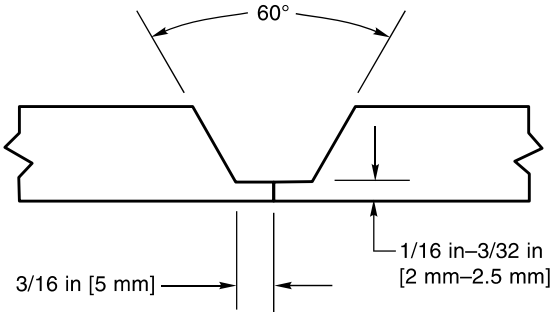


**Figure 3.30—Tubular Groove Weld—Performance Qualification—Without Backing (Alternative to Figure 3.29) (see 3.19.3(2))**

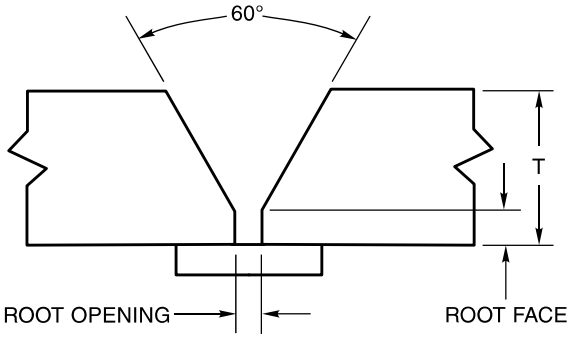


**Figure 3.31—Tubular Groove Weld—Performance Qualification—With Backing (see 3.19.3(3))**



Copyright American Welding Society
Provided by IHS under license with AWS
No reproduction or networking permitted without license from IHS
Licensee=University of Texas Revised Sub Account/5620001114
Not for Resale, 08/29/2012 23:44:22 MDT

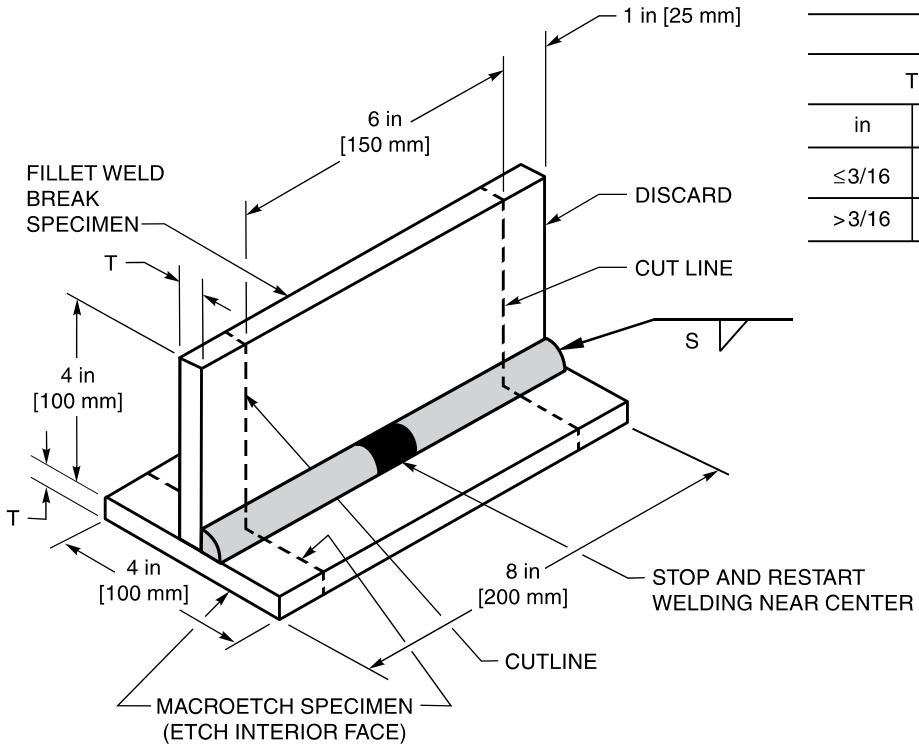


| FILLET WELD SIZE | | | |
|---|---|---|---|
| T | | S, MAX. | |
| in | mm | in | mm |
| ≤3/16 | ≤5 | 1/4 | 6 |
| >3/16 | >5 | T + 1/16 | T + 2 |

**Figure 3.32—Fillet Weld or Tack Welder Performance Qualification—Plate (see 3.19.4.1)**

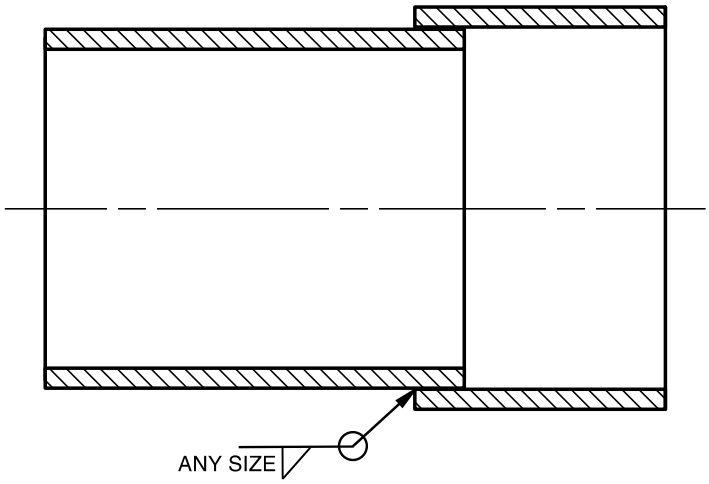


**Figure 3.33—Fillet Weld or Tack Welder Performance Qualification—Pipe or Tubing (see 3.19.4.2)**



Copyright American Welding Society
Provided by IHS under license with AWS
No reproduction or networking permitted without license from IHS
Licensee=University of Texas Revised Sub Account/5620001114
Not for Resale, 08/29/2012 23:44:22 MDT

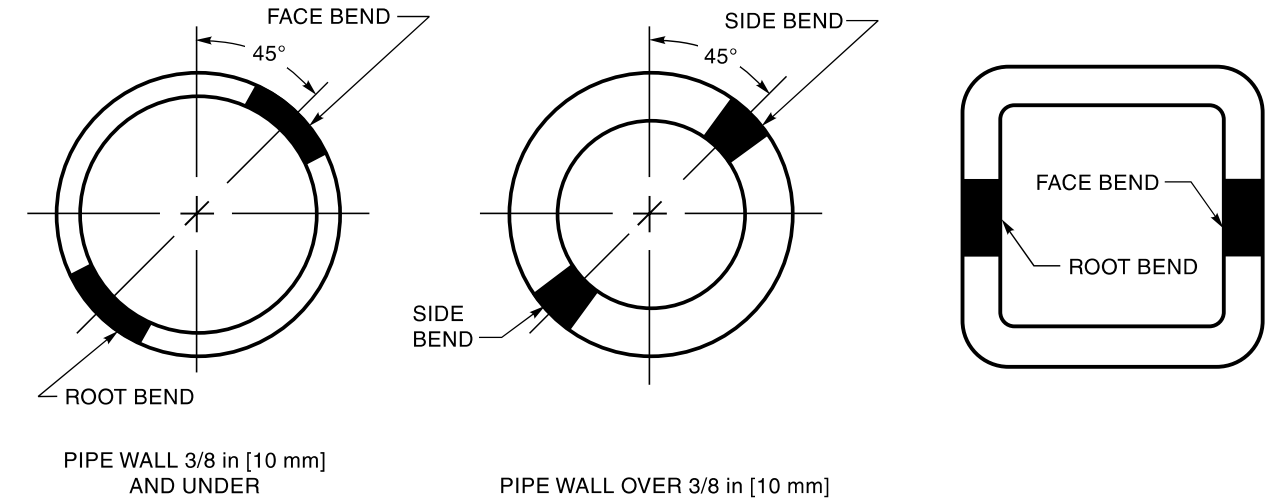


**SPECIMENS FOR 1G AND 2G POSITIONS**

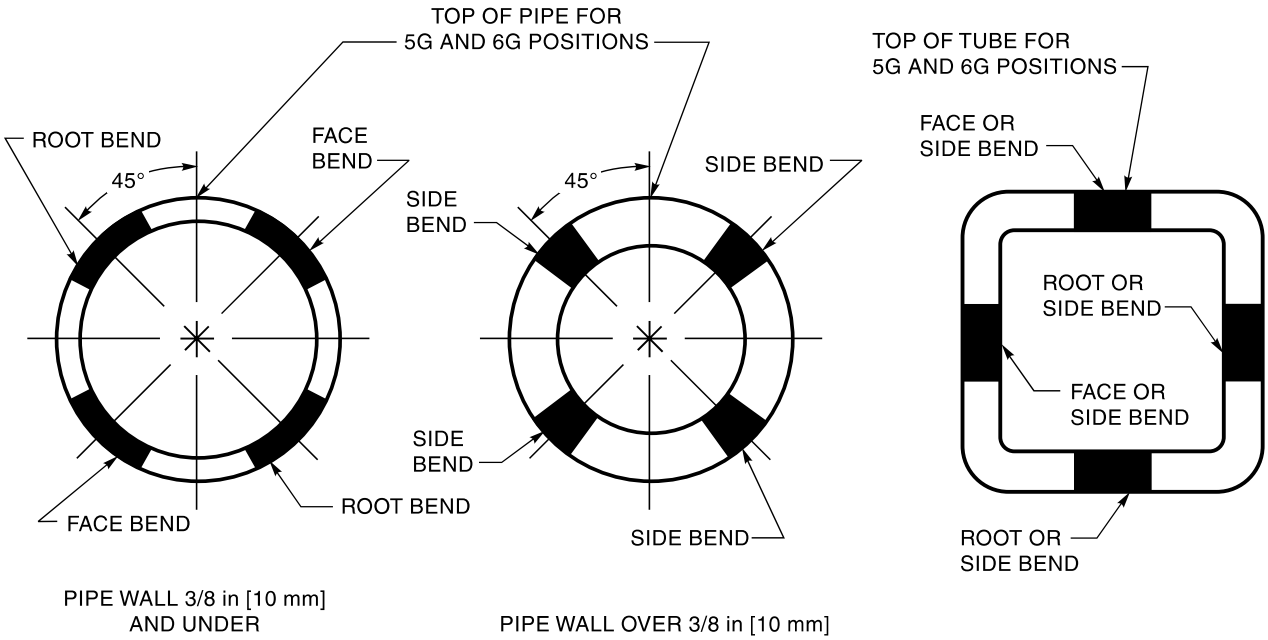


**SPECIMENS FOR 5G AND 6G POSITIONS**

**Figure 3.34—Location of Test Specimens on Welded Test Pipe and Box Tubing—Performance Qualification (see 3.21.4)**



Copyright American Welding Society
Provided by IHS under license with AWS
No reproduction or networking permitted without license from IHS
Licensee=University of Texas Revised Sub Account/5620001114
Not for Resale, 08/29/2012 23:44:22 MDT

This page is intentionally blank.



Copyright American Welding Society
Provided by IHS under license with AWS
No reproduction or networking permitted without license from IHS

Licensee=University of Texas Revised Sub Account/5620001114
Not for Resale, 08/29/2012 23:44:22 MDT

# 4. Fabrication

## 4.0 Scope

This clause contains the requirements for the preparation, assembly, and workmanship of welded aluminum structures.

## 4.1 Processes

This code provides requirements for these processes:

(1) GMAW—gas metal arc welding

(2) GTAW—gas tungsten arc welding

(3) PAW-VP—plasma arc welding with variable polarity

(4) SW—stud welding

## 4.2 Base Metal

**4.2.1 Specifications.** Base metal shall conform to an ASTM specification listed in Table 4.1.

## 4.3 Filler Metal

**4.3.1 Selection.** Filler metal shall conform to the latest edition of AWS A5.10/A5.10M, *Specification for Bare Aluminum and Aluminum Alloy Welding Electrodes and Rods*. Table 4.2 lists filler alloys recommended for various base metal alloys.

**4.3.2 Grouping.** Filler metals are grouped to reduce the number of WPSs as follows:

| Group Designation | AWS Filler Metal Classification |
|---|---|
| F21 | ER1100, ER1188, R1100, R1188 |
| F22 | ER5183, ER5356, ER5554, ER5556, ER5654, R5183, R5356, R5554, R5556, R5654 |
| F23 | ER4010, ER4043, ER4047, ER4145, ER4643, R4010, R4043, R4047, R4145, R4643 |
| F24 | ER4009, R206.0, R357.0, R-A356.0, R-A357.0, R4009, R-C355.0, R4011 |
| F25 | ER2319, R2319 |

**4.3.3 Certification.** When requested by the Engineer, the Contractor shall furnish the electrode manufacturer's certification that the filler meets the latest edition of AWS A5.10/A5.10M.

**4.3.4 Storage.** Filler metals shall be stored in unopened containers, in a dry place, adequately protected from the weather until needed at the fabrication site. Recommendations of the manufacturer concerning special protection during storage and use shall be followed.

## 4.4 Tungsten Electrodes

Tungsten electrodes shall conform to the latest edition of AWS A5.12/A5.12M, *Specification for Tungsten and Tungsten Alloy Electrodes for Arc Welding and Cutting*. For processes using tungsten electrodes (GTAW and PAW-VP), the electrode diameter shall be sufficient to carry the welding current specified in the WPS (see Annex K for typical current ranges and chemical compositions).

## 4.5 Shielding Gas

A gas or gas mixture used for shielding shall be of a welding grade and have a minimum purity of 99.997% and a dew point of –76°F [–60°C] or lower for argon and a minimum purity of 99.995% and a dew point of –71°F [–57°C] or lower for helium (see AWS A5.32/A5.32M, *Specification for Welding Shielding Gases*). When requested by the Engineer, the Contractor shall furnish the gas manufacturer's certification that the gas or gas mixture will meet the dew point requirements. When mixed at the welding site, suitable meters shall be used for proportioning the gases. Percentage of gases shall conform to the requirements of the WPS.

## 4.6 Welding and Cutting Equipment

Welding and cutting equipment shall be designed, manufactured, and maintained so that qualified welders, weld-



Copyright American Welding Society
Provided by IHS under license with AWS
No reproduction or networking permitted without license from IHS

Licensee=University of Texas Revised Sub Account/5620001114
Not for Resale, 08/29/2012 23:44:22 MDT

ing operators, and tack welders are able to follow the procedures and attain the results required in this code.

## 4.7 Backing

**4.7.1 Position.** Backing shall be in intimate contact with the root side of the parts being welded.

**4.7.2 Removal.** In statically loaded structures, backing need not be removed. In cyclically loaded structures, backing transverse to the direction of computed stress shall be removed and the joint finished smooth; backing parallel to the direction of computed stress or not subject to computed stress need not be removed.

**4.7.3 Permanent Backing.** Permanent backing shall be a bare aluminum alloy of the same M-number as either of the parts joined. The backing may be attached with intermittent fillet welds unless corrosion is a consideration, in which case it shall be attached with continuous fillet welds along both edges. The backing shall be continuous for the full length of the weld. Welds in the backing shall be CJP groove welds with the reinforcement removed.

**4.7.4 Temporary Backing.** Temporary backing shall be ceramic, glass tape, austenitic stainless steel, anodized aluminum alloy, or copper. Copper shall not be used if the joint has a 1/32 in [1 mm] gap or larger.

## 4.8 Preheat and Interpass Temperatures

When fabricating the heat-treatable aluminum alloys or the 5000-series aluminum-magnesium alloys containing more than 3% magnesium, the preheat and interpass temperatures shall not exceed 250°F [120°C]. Holding times at this temperature shall not exceed 15 min.

## 4.9 Welding Environment

Welding shall not be performed in a wind exceeding 5 mph [8 kph] nor when the surfaces are wet or exposed to precipitation.

## 4.10 Compliance with Design

The dimensions and locations of welds shall be those shown on the drawings and shall not be changed without prior written approval.

## 4.11 Preparation of Base Metal

**4.11.1 Edges.** Edges shall be formed by shearing, sawing, plasma arc cutting, chipping, planing, milling, routing, abrasive water jet cutting, laser cutting, or grinding. All surfaces to be welded shall be free from paint, anodizing, grease, moisture, and thick aluminum oxide and shall be smooth, uniform, and free from burrs, fins, tears, and cracks.

**4.11.2 Grinding.** When grinding, care shall be taken to select nonloading type abrasives specifically intended for use on aluminum, and the abrasives shall be maintained free of lubricants and other foreign material.

**4.11.3 Plasma Arc and Laser Cut Edges.** For heat-treatable aluminum alloys, 1/8 in [3 mm] of material shall be removed by machining from plasma arc and laser cut edges that will be welded.

For all alloys, the surface roughness of arc cut surfaces shall be no greater than 1000 µin [25 µm] as defined by ANSI B46.1, *Surface Texture*, for material up to 4 in [100 mm] thick and 2000 µin [50 µm] for material 4 in to 8 in [100 mm to 200 mm] thick. At member ends not subject to calculated stress, the surface roughness shall be no greater than 2000 µin [50 µm].

Roughness exceeding the permissible amount and occasional notches or gouges more than 3/16 in [5 mm] deep on otherwise satisfactory surfaces shall be faired into the cut surface by machining or grinding to a slope not exceeding one in ten. Occasional notches or gouges less than 7/16 in [11 mm] deep in material up to 4 in [100 mm] thick, or less than 5/8 in [16 mm] deep in material more than 4 in [100 mm] thick may, with approval, be repaired by welding. Repairs by welding shall be finished flush with the adjacent surface.

**4.11.4 Visual Inspection and Repair of Cut Edges.** The requirements of 4.11.4 are not applicable to cases in which the stress is applied normal to the plate surface.

**4.11.4.1** In the determination of limits of internal discontinuities revealed on sheared or cut edges and caused by tearing, inclusions, or delamination (seldom encountered in aluminum products), the amount of metal removed shall be the minimum necessary to remove the discontinuity or to determine that the allowable limit of the discontinuity is not exceeded. The removal of metal for this purpose may be done from either the plate surface or a cut edge. Cut edges may exist at any angle with respect to the direction of rolling.

**4.11.4.2** The limits of acceptability and the repair of edge discontinuities shall be in conformance with Table 4.3, in which the length of the discontinuity is the visible long dimension on the cut edge, and the depth is the dis-



Copyright American Welding Society
Provided by IHS under license with AWS
No reproduction or networking permitted without license from IHS
Licensee=University of Texas Revised Sub Account/5620001114
Not for Resale, 08/29/2012 23:44:22 MDT

tance that the discontinuity is determined to extend into the plate from the cut edge.

**4.11.4.3** For discontinuities with a length greater than 1 in [25 mm], discovered by visual examination of the cut edge and determined to exceed 1 in [25 mm] depth for each discontinuity exhibited before welding or during examination of welded joints by RT or UT, the following procedures shall be followed.

(1) Where discontinuities, such as W, X, or Y in Figure 4.1, are discovered prior to completing the joint, the size and shape of the discontinuity shall be determined by UT.

(2) For acceptance of discontinuities, the following requirements apply:

$A_D$ = acceptable area of discontinuity (or acceptable aggregate area of multiple discontinuities)

$A_P$ = plate area = plate length × width (W)

$l_d$ = length of discontinuity (or aggregate length of discontinuities on any transverse section, as measured perpendicular to the plate length)

For $l_d \leq 0.2W$, $A_D \leq 0.04\ A_P$

For $l_d > 0.2W$, $A_D \leq 0.04\ A_P \left[1 - \frac{(l_d - 0.2W)}{W}\right]$

The discontinuity on the cut edge of the plate shall be gouged out to a depth of 1 in [25 mm] beyond its intersection with the surface by chipping or gouging, and blocked off by welding in layers not exceeding 1/8 in [3 mm] in thickness.

(3) If a discontinuity, Z, not exceeding the allowable area in 4.11.4.3(2) is discovered after the joint has been completed and is determined to be 1 in [25 mm] or more away from the weld, no repair of the discontinuity is required. If the discontinuity Z is less than 1 in [25 mm] away from the weld, it shall be gouged out to a distance of 1 in [25 mm] from the fusion zone of the weld by chipping or gouging. The groove shall then be filled by welding in layers not exceeding 1/8 in [3 mm] in thickness. Repair by welding shall be subject to the same NDT requirement as other groove welds.

(4) If the area of the discontinuity W, X, Y, or Z exceeds the allowable limits in 4.11.4.3(2), the plate or subcomponent shall be rejected and replaced, or repaired at the discretion of the Engineer. The aggregate length of weld repair shall not exceed 20% of the length of the plate edge without the approval of the Engineer.

(5) All repair welding shall be in conformance with a qualified WPS and the applicable provisions of this code, and performed by a qualified welder.

**4.11.5 Grooves.** U-grooves may be prepared before or after fit-up.

**4.11.6 Reentrant Corners.** Reentrant corners shall have a fillet radius of no less than 1/2 in [12 mm] for statically loaded and tubular structures and 3/4 in [20 mm] for cyclically loaded structures. The fillet and its adjacent cuts shall meet without offset or cutting past the point of tangency.

**4.11.7 Beam Copes and Weld Access Holes.** Radii of beam copes and weld access holes shall provide a smooth transition free of notches or cutting past the points of tangency between adjacent surfaces. The size of all weld access holes required to facilitate welding operations shall be adequate for deposition of sound weld metal. In built-up shapes, all beam copes and weld access holes shall be shaped free of notches or sharp reentrant corners except that when fillet web-to-flange welds are used in built-up shapes, access holes may be used to terminate perpendicular to the flange. Fillet welds shall not be returned through weld access holes.

**4.11.8 Weld Removal.** Machining, sawing, gouging, chipping, or grinding may be used to backgouge, remove temporary welds, or remove unacceptable work or metal.

**4.11.9 Allowance for Camber.** Edges of webs or built-up beams and girders shall be cut to the required camber with allowance for shrinkage due to cutting and welding. Moderate variations from the specified camber may be corrected by procedures approved by the Engineer.

## 4.12 Assembly

### 4.12.1 Groove Welds

**4.12.1.1 Flat Part Alignment.** The offset between midplanes of abutting flat parts to be joined by groove welds shall not exceed the lesser of 10% of the thickness of the thinner part and 1/8 in [3 mm]. The slope of parts drawn together to correct misalignment shall not exceed 1/2 inch in 12 in [12 mm in 300 mm].

**4.12.1.2 Tube Alignment.** The radial offset of abutting tube edges to be joined by girth welds shall not exceed 30% of the wall thickness or 1/4 in [6 mm], whichever is smaller. If the offset exceeds 1/8 in [3 mm], the joint shall be welded from both sides. For joints that cannot be welded from both sides, the radial offset shall not exceed 1/8 in [3 mm]. Girth welds shall not be closer together than the lesser of the tube diameter or 3 ft [1 m]. There shall be no more than two girth welds in any 10 ft



Copyright American Welding Society
Provided by IHS under license with AWS
No reproduction or networking permitted without license from IHS
Licensee=University of Texas Revised Sub Account/5620001114
Not for Resale, 08/29/2012 23:44:22 MDT

[3 m] length of tube. Longitudinal welds in adjoining sections shall be spaced at least 90° apart.

**4.12.1.3 Groove Dimensions.** For groove welds except those made from one side only without backing, variations in the groove dimensions shall not exceed:

| | |
|---|---|
| (1) Root face of joint | ±1/16 in [2 mm] |
| (2) Root opening of joints without backing or with temporary backing | ±1/16 in [2 mm] |
| (3) Root opening of joints with permanent backing | +1/4 in [6 mm], –1/16 in [2 mm] |
| (4) Groove angle of joint | +10°, –5° |

For welds made from one side only without backing, variations in the groove dimensions shall not exceed:

| | |
|---|---|
| (1) Root face of joint | ±1/32 in [1 mm] |
| (2) Root opening of joints | ±1/16 in [2 mm] |
| (3) Groove angle of joint | ±5° |

**4.12.2 Fillet Welds.** The separation between parts less than 3 in [75 mm] in thickness to be joined by fillet welds shall not exceed 1/16 in [2 mm]. The separation between parts 3 in [75 mm] or more in thickness shall not exceed 5/16 in [8 mm] provided that for separations greater than 1/16 in [2 mm] a sealing weld or backing is used to prevent melt-through and the leg of the fillet weld is increased by the amount of the separation.

**4.12.3 Plug and Slot Welds.** The separation between faying surfaces of plug and slot welds and of groove welds with backing shall not exceed 1/16 in [2 mm]. The use of filler plates to decrease the separation is prohibited unless approved and made in conformance with 2.6.

**4.12.4 Tubular Structures.** The ends of branch members to be joined with CJP welds shall be shaped by a machining operation to fit snugly at an angle within 5° of the intersection angle shown on the drawings. The edge shall be trimmed to produce a satisfactory welding edge as in Figures B.3 and B.4 (see Annex B).

**4.12.5 Positioning.** Parts to be welded shall be held in position by fixtures or tack welds until welding is completed. The use of fixtures is recommended where practicable. Fixtures and tack welds shall have sufficient strength to resist forces resulting from temperature changes in the parts.

## 4.13 Technique

Technique shall conform with the requirements of Table 4.4.

## 4.14 Tack and Temporary Welds

**4.14.1 Tack Welds.** Tack welds shall be made using a qualified WPS by a qualified welder, welding operator, or tack welder and subject to the same quality requirements as final welds. Tack welds to be incorporated into the final weld shall be made with filler metal of the same composition and cleaned thoroughly before incorporation.

**4.14.2 Temporary Welds.** Temporary welds shall be made using a qualified WPS by a qualified welder or welding operator and subject to the same quality requirements as final welds. Strongbacks, clips, hangers, and other temporary parts that have been welded in place to facilitate assembly shall be removed and the welds made flush with the metal surface. Temporary welds not incorporated in final welds may only be made if approved and shall be identified on the drawings.

## 4.15 Dimensional Tolerances for Welded Members

**4.15.1 Straightness of Compression Members.** Compression members shall not vary from straight by more than the member length divided by 960, rounded to the nearest 1/8 in [3 mm].

**4.15.2 Straightness of Beams.** Beams without specified camber shall not vary from straight by more than the member length divided by 960, rounded to the nearest 1/8 in [3 mm] in an unloaded position.

**4.15.3 Beam Camber.** Variation from the specified camber of beams before erection shall not exceed:

(1) at midspan,

(a) –0, +1-1/2 in [40 mm] for spans ≥100 ft [30 m]

(b) –0, + 3/4 in [20 mm] for spans <100 ft [30 m]

(2) at supports,

(a) 0 for end supports

(b) ±1/8 in [3 mm] for interior supports

(3) at intermediate points,

$$-0, +4ab\,\frac{\left(1-\frac{a}{S}\right)}{S}$$

where

a = distance in ft [m]

S = span length in ft [m]

b = 1-1/2 in [40 mm] for spans ≥100 ft [30 m]
3/4 in [20 mm] for spans <100 ft [30 m]



Copyright American Welding Society
Provided by IHS under license with AWS
No reproduction or networking permitted without license from IHS
Licensee=University of Texas Revised Sub Account/5620001114
Not for Resale, 08/29/2012 23:44:22 MDT

**4.15.4 Web Flatness.** Variation from flatness of webs is determined by measuring the distance between the web and a straight edge whose length is not less than the least clear dimension of a web panel. Variations from flatness of webs with least panel dimension *d* shall not exceed *d*/100.

**4.15.5 Flange Warpage and Tilt.** The combined warpage and tilt of flanges shall be determined by measuring the distance from the flange edge to a line normal to the plane of the web through the intersection of the centerline of the web with the outside surface of the flange, in the plane of the cross section. This distance shall not exceed the greater of 1% of the total flange width or 1/4 in [6 mm], and abutting parts to be joined by groove welds shall meet the requirements of 4.12.1.1.

**4.15.6 Variation Between Web and Flange Centerlines.** Lateral variation between the centerline of the web and the centerline of the flange at the contact surface shall not exceed 1/4 in [6 mm].

**4.15.7 Depth Variation.** Variation from the specified depth of members, measured at the web centerline, shall not exceed

| | |
|---|---|
| for depths up to 36 in [0.9 m], inclusive | ±1/8 in [3 mm] |
| for depths over 36 in to 72 in [0.9 m to 1.8 m], inclusive | ±3/16 in [5 mm] |
| for depths over 72 in [1.8 m] | ±5/16 in [8 mm] |

**4.15.8 Other Dimensional Tolerances.** Dimensional tolerances not specified in this code shall be mutually agreed on by the Contractor and the Engineer.

## 4.16 Arc Strikes

Blemishes or cracks caused by arc strikes outside the final weld shall be repair welded, if necessary, and finished to a smooth contour.

## 4.17 Weld Termination

**4.17.1 General.** Welds shall be started and stopped in a manner that ensures sound welds.

**4.17.2 With Extension Bars.** Extension bars (also called run-on or run-off plates) shall be of the same M number as the base metal. Extension bars in cyclically loaded structures shall be removed upon completion and cooling of the weld. Ends of the weld shall be made smooth and flush with the edges of the adjacent parts.

**4.17.3 Without Extension Bars.** When a weld cannot be terminated on an extension bar, the weld shall be terminated in a low stress area.

**4.17.4 Within a Joint.** Terminating a weld within a joint may be done by any of the following methods or combination thereof:

(1) Reversing the direction of travel for a distance of at least 2 in [50 mm].

(2) Increasing travel speed.

(3) Providing a build-up of metal and remolding the crater area flush with the weld surface by mechanical means.

(4) Using automated crater fill features in the welding equipment.

(5) Rapidly triggering the gun manually.

**4.17.5 Craters.** Weld craters shall meet the requirements of Table 4.6 or shall be repaired in conformance with 4.19.

**4.17.6 Girth Welds.** Weld terminations around the circumference of piping and tubing shall overlap the weld start by at least 1/2 in [12 mm] for pipe circumferences through 18 in [460 mm] and 1 in [25 mm] for circumferences greater than 18 in [460 mm].

## 4.18 Control of Distortion and Shrinkage

**4.18.1 Sequence.** In assembling and joining parts of a structure or of built-up members, and in welding reinforcing parts to members, the WPS and sequence shall be such as will minimize distortion and shrinkage. Joints expected to have significant shrinkage should usually be welded before joints expected to have lesser shrinkage. Insofar as practicable, all welds shall be deposited in a sequence that will balance the applied heat of welding while the welding progresses. When required by the contract documents, the Contractor shall prepare a welding sequence specification for a member or structure which, in conjunction with the WPS and overall fabrication methods, will produce members or structures meeting the quality requirements specified. The welding sequence and distortion-control plan shall be submitted to the Engineer before the start of welding.

**4.18.2 Direction of Welding.** The direction of the general progression in welding on a member shall be from points where the parts are relatively fixed in position with respect to each other toward points where they have a greater relative freedom of movement.



Copyright American Welding Society
Provided by IHS under license with AWS
No reproduction or networking permitted without license from IHS
Licensee=University of Texas Revised Sub Account/5620001114
Not for Resale, 08/29/2012 23:44:22 MDT

**4.18.3 Crack Prevention.** In making welds under conditions of severe external shrinkage restraint, the welding shall be completed or completed to a point that will ensure freedom from cracking, before the joint is allowed to cool completely.

**4.18.4 Corrections.** Members distorted by welding shall be straightened at ambient temperature by mechanical means or by carefully supervised application of a controlled amount of localized heat in conjunction with mechanical means. If localized heating is to be applied in any straightening operation, the complete procedure shall be filed with and approved by the Engineer. This procedure shall adhere to the maximum temperature values in Table 4.5 and the following: Except for those stresses resulting from the mechanical straightening method used in conjunction with the application of heat, the part to be heated for straightening shall be substantially free of stress and from external forces. Maximum holding times for the forming and straightening of aluminum alloys at various temperatures are described in Table 4.5.

**4.18.4.1** For 5XXX series wrought alloys and cast alloys 514.0 and 535.0 with magnesium content greater than 3%, holding within the temperature range from 150°F to 450°F [65°C to 230°C] shall be avoided in order to minimize the possibility of sensitization to exfoliation and stress corrosion cracking. The length of time at temperature is a critical factor in determining the degree of sensitization. Hot forming techniques shall include quick heat up to a temperature not to exceed 550°F [290°C] in order to minimize the loss of mechanical properties. Forming shall be complete before the metal cools below 450°F [230°C]. The metal should then be fan cooled to drop the metal temperature from 450°F to 150°F [230°C to 65°C] in the minimum time possible to prevent sensitization.

**4.18.4.2** For alloy 2219 and 6XXX alloys, distortion removal shall be performed at a temperature below 450°F [230°C]. The time that the structure is held at temperature while removing the weld distortion shall not exceed those times in Table 4.5.

**4.18.4.3** For 7005 alloy, distortion removal shall be done preferably in the O-annealed or W, solution heat-treated condition, and then the structure shall be given the appropriate thermal treatment after straightening.

**4.18.4.4** For A201.0, A444.0, and the 3XX.0 casting alloys, straightening shall be done in the T4 condition before age hardening. The preheat shall not exceed 300°F [150°C] for these castings and should be of short duration for the 3XX.0 alloys to minimize the effect on the mechanical properties. Casting alloy A201.0 may be preheated to 300°F [150°C] for a longer duration (up to 5 h).

## 4.19 Weld Profiles

**4.19.1 Fillet Welds.** Fillet welds shall comply with Table 4.6. The faces of fillet welds may be slightly convex, flat, or slightly concave as shown in Figure 4.2(A) and (B), but shall not have any of the unacceptable profiles shown in Figure 4.2(C).

**4.19.2 Groove Welds.** Groove welds shall comply with Table 4.6. Groove welds shall be made with minimum reinforcement unless otherwise specified. In the case of butt and corner joints, the weld face reinforcement and root melt-through height shall not exceed the values given in Figure 4.2(D) and (E) and shall have a gradual transition to the plane of the base metal surface. The weld shall be free of discontinuities of the types shown in Figure 4.2(F).

## 4.20 Repairs

**4.20.1 Approval.** Approval of the Engineer shall be obtained for weld repairs to mill discontinuities in base metal, repair of cracks, or a revised design to compensate for deficiencies. The Engineer shall be notified before improperly fitted and welded members are cut apart.

**4.20.2 Accessibility.** If, after an unacceptable weld has been made, work is performed which has rendered that weld inaccessible or has created new conditions which make correction of the unacceptable weld dangerous or ineffective, then the original conditions shall be restored by removing the added welds or members, or both, before the corrections are made. If this is not done, the deficiency shall be compensated for by additional work performed according to an approved revised design.

**4.20.3 Options.** The Contractor has the option of either repairing an unacceptable weld, or removing and replacing the entire weld. The removal of weld metal or portions of the base metal may be done by mechanical means. Unacceptable portions of the weld shall be removed. Metal added to compensate for any deficiency in the size of the weld shall be deposited by a qualified welder with filler of the same composition in conformance with an approved WPS. The surfaces shall be cleaned thoroughly before welding.

**4.20.4 Weld Replacement.** If the Contractor elects to remove and replace the entire weld, a WPS approved by



Copyright American Welding Society
Provided by IHS under license with AWS
No reproduction or networking permitted without license from IHS
Licensee=University of Texas Revised Sub Account/5620001114
Not for Resale, 08/29/2012 23:44:22 MDT

the Engineer shall be used and such replacement welds shall be recorded on the shop drawings.

**4.20.5 Weld Repair.** If the Contractor elects to repair the weld, it shall be corrected as follows:

**4.20.5.1 Overlap or Excessive Convexity.** Excess weld metal shall be removed by machining, chipping, or grinding.

**4.20.5.2 Excessive Concavity of Weld or Crater, Undersize Welds, Undercutting.** Surfaces shall be prepared and additional weld metal deposited, in conformance with the WPS.

**4.20.5.3 Excessive Weld Porosity or Incomplete Fusion.** Unacceptable portions shall be removed and the area rewelded in conformance with the WPS.

**4.20.5.4 Cracks in Weld or Base Metal.** The extent of the crack shall be ascertained by use of PT, RT, or other NDT means. The crack shall be removed and the area rewelded in conformance with the specified WPS. If PT is used, all traces of penetrant and developer shall be removed before rewelding is begun.

**4.20.6 Inspection.** The repaired or replaced weld shall be inspected using the same technique and quality acceptance criteria applied to the original weld.

## 4.21 Copper Inclusions

Copper inclusions deposited during welding shall be removed to sound metal.

## 4.22 Cleaning of Completed Welds

**4.22.1 Inspection.** Welded joints shall not be painted or otherwise covered before the weld is examined and approved.

**4.22.2 Cleaning.** Where appearance is important, weld spatter, adhesions, scratches, etc. shall be removed by wire brushing, grinding, sanding, or polishing and the surface cleaned with a chemical cleaner.

## 4.23 Anti-Spatter Compound

The use of anti-spatter compound is prohibited unless approved by the Engineer.

## 4.24 Postweld Heat Treatment

Postweld heat treatment shall be performed in conformance with procedures approved by the Engineer.



Copyright American Welding Society
Provided by IHS under license with AWS
No reproduction or networking permitted without license from IHS
Licensee=University of Texas Revised Sub Account/5620001114
Not for Resale, 08/29/2012 23:44:22 MDT

## Table 4.1
## Aluminum Alloy Products Available for Structural Applications (see 4.2.1)

| Alloy No.[a] | Sheet and Plate ASTM B 209 | Rolled or Cold Finished Rod, Bar, and Wire ASTM B 211 | Extruded Rod, Bar, Wire, Profiles, and Tubes ASTM B 221 | Standard Structural Profiles ASTM B 308 | Seamless Extruded Tube and Pipe ASTM B 241 | Seamless Extruded Tube and Pipe ASTM B 429 | Seamless Drawn Tube and Pipe ASTM B 210 | Seamless Drawn Tube and Pipe ASTM B 483 | Welded Tube ASTM B 313 | Welding Fittings ASTM B 361 | Forgings ASTM B 247 | Sand Castings ASTM B 26 | Permanent Mold Castings ASTM B 108 | Investment Castings ASTM B 618 | High-Strength Castings ASTM B 686 |
|---|---|---|---|---|---|---|---|---|---|---|---|---|---|---|---|
| **Wrought Alloys** | | | | | | | | | | | | | | | |
| 1060 | X | X | X | | X | | X | X | | X | | | | | |
| 1100 | X | X | X | | X | | X | X | X | X | X | | | | |
| 2219 | X | X | X | | X | | | | | | X | | | | |
| 3003 | X | X | X | | X | | X | X | X | X | X | | | | |
| Alclad 3003 | X | | X | | X | | X | | | X | | | | | |
| 3004 | X | | X | | | | | | X | | | | | | |
| Alclad 3004 | X | | | | | | | | X | | | | | | |
| 5005 | X | | | | | | X | X | | | | | | | |
| 5050 | X | | | | | | X | X | X | | | | | | |
| 5052 | X | X | X | | X | | X | X | X | | | | | | |
| 5083 | X | | X | | X | | X | | | X | X | | | | |
| 5086 | X | | X | | X | | X | | X | X | | | | | |
| 5154 | X | X | | | | | X | | X | X | | | | | |
| 5254 | X | | X | | X | | | | | | | | | | |
| 5454 | X | | X | | X | | | | | | | | | | |
| 5456 | X | | X | | X | | X | | | | | | | | |
| 5652 | X | | | | X | | | | | | | | | | |
| 6005 | | | X | | | | | | | | | | | | |
| 6005A | | | X | | | | | | | | | | | | |
| 6061 | X | X | X | X | X | X | X | X | X | X | X | | | | |
| Alclad 6061 | X | | | | | | | | | | | | | | |
| 6063 | | | X | | X | X | X | X | | X | | | | | |
| 6082 | | | X | | | | | | | | | | | | |
| 6351 | | | X | | X | | | | | | | | | | |
| 7005 | | | X | | | | | | | | | | | | |
| **Cast Alloys** | | | | | | | | | | | | | | | |
| A201.0 | | | | | | | | | | | | | | | X |
| 354.0 | | | | | | | | | | | | | X | | X |
| C355.0 | | | | | | | | | | | | X | X | X | X |
| 356.0 | | | | | | | | | | | | X | X | X | |
| A356.0 | | | | | | | | | | | | X | X | X | X |
| 357.0 | | | | | | | | | | | | | X | | |
| A357.0 | | | | | | | | | | | | | X | | X |
| 359.0 | | | | | | | | | | | | | X | | |
| 443.0 | | | | | | | | | | | | X | X | X | |
| A444.0 | | | | | | | | | | | | | X | | |
| 514.0 | | | | | | | | | | | | X | | X | |
| 535.0 | | | | | | | | | | | | X | X | X | |

[a] Wrought alloys 1xxx, 3xxx, 5xxx, and cast alloys 4xx.x and 5xx.x are nonheat-treatable alloys. Wrought alloys 2xxx, 6xxx, and 7xxx and cast alloys x2xx.x and x3xx.x are heat-treatable alloys.



Copyright American Welding Society
Provided by IHS under license with AWS
No reproduction or networking permitted without license from IHS

Licensee=University of Texas Revised Sub Account/5620001114
Not for Resale, 08/29/2012 23:44:22 MDT

## Table 4.2
## Recommended Aluminum Alloy Filler Metals for Structural Welding of Various Base Aluminum Alloys (see 4.3.1)

| Base Metal to Base Metal | 1060, 1100, 3003, Alclad 3003 | 2219, A201.0 | 3004, Alclad 3004 | 5005, 5050 | 5052, 5652 | 5083, 5456 | 5086, 514.0, 535.0 | 5154, 5254 | 5454 | 6005, 6005A, 6061, Alclad 6061, 6063, 6082, 6351 | 7005 | 354.0 C355.0 | 356.0, A356.0, 357.0, A357.0, 359.0, 443.0, A444.0 |
|---|---|---|---|---|---|---|---|---|---|---|---|---|---|
| 356.0, A356.0, 357.0, A357.0, 359.0, 443.0, A444.0 | 4043 | 4145 | 4043 | 4043 | 4043 | 5356 | 5356 | 4043 | 4043 | 4043 | 4043 | 4145 | 4043 |
| 354.0, C355.0 | 4145 | 4145 | 4145 | 4145 | 4043 | NR | NR | NR | 4043 | 4145 | 4145 | 4145 | |
| 7005 | 5356 | 4145 | 5356 | 5356 | 5356 | 5556 | 5356 | 5356 | 5356 | 5356 | 5356 | | |
| 6005, 6005A, 6061, Alclad 6061, 6063, 6082, 6351 | 4043 | 4145 | 5356 | 4043, 5356 | 4043, 5356 | 5356 | 5356 | 5356 | 5356 | 4043, 5356 | | | |
| 5454 | 4043 | 4043 | 5356 | 5356 | 5356 | 5356 | 5356 | 5356 | 5554 | | | | |
| 5154, 5254 | 4043 | NR | 5356 | 5356 | 5356 | 5356 | 5356 | 5356 | | | | | |
| 5086, 514.0, 535.0 | 5356 | NR | 5356 | 5356 | 5356 | 5356 | | | | | | | |
| 5083, 5456 | 5356 | NR | 5356 | 5356 | 5356 | 5183, 5556 | | | | | | | |
| 5052, 5652 | 4043 | 4043 | 4043 | 4043, 5356 | 5356 | | | | | | | | |
| 5005, 5050 | 4043 | 4145 | 4043 | 4043, 5356 | | | | | | | | | |
| 3004, Alclad 3004 | 4043 | 4145 | 4043 | | | | | | | | | | |
| 2219, A201.0 | 4145 | 2319 | | | | | | | | | | | |
| 1060, 1100, 3003, Alclad 3003 | 1100 | | | | | | | | | | | | |

Notes:
1. The filler alloy shown is the best choice for most structural applications. Where two filler alloys are shown, either is acceptable.
2. Whenever 4043 is shown, 4047 is an acceptable alternate.
3. Whenever 5356 is shown, 5183 or 5556 are acceptable alternates.
4. Al-Mg alloys containing more than 3% Mg should not be used in applications where long-term exposures above 150°F are encountered
5. There are applications where specific requirements make the selection of filler alloys other than those shown above necessary.



Copyright American Welding Society
Provided by IHS under license with AWS
No reproduction or networking permitted without license from IHS

Licensee=University of Texas Revised Sub Account/5620001114
Not for Resale, 08/29/2012 23:44:22 MDT

**Table 4.3**
**Limit of Acceptability and Repair of Cut Edge Discontinuities in Plate (see 4.11.4.2)**

| Description of Discontinuity | Plate Repair Required |
|---|---|
| Any discontinuity 1 in [25 mm] in length or less | None, need not be explored. |
| Any discontinuity over 1 in [25 mm] in length and 1/8 in [3 mm] maximum depth | None, but the depth should be explored.[a] |
| Any discontinuity over 1 in [25 mm] in length with depth over 1/8 in [3 mm] but not greater than 1/4 in [6 mm] | Remove, need not weld. |
| Any discontinuity over 1 in [25 mm] in length with depth over 1/4 in [6 mm] but not greater than 1 in [25 mm] | Completely remove and weld. Aggregate length of welding shall not exceed 20% of the length of the plate edge being repaired. |
| Any discontinuity over 1 in [25 mm] in length with depth greater than 1 in [25 mm] | See 4.11.4.3 |

[a] A spot check of 10% of the discontinuities on the cut surface in question should be explored to determine depth. If the depth of any one of the discontinuities explored exceeds 1/8 in [3 mm], then all of the discontinuities remaining on that edge shall be explored to determine depth. If none of the discontinuities explored in the 10% spot check have a depth exceeding 1/8 in [3 mm], then the remainder of the discontinuities on that edge need not be explored.

**Table 4.4**
**Technique**

| Variable | Position | Weld Type | GMAW | GTAW |
|---|---|---|---|---|
| Metal Transfer Mode | All | All | Spray Transfer Mode | Within the compatible range specific to the type and diameter of the tungsten electrode |
| Direction | V | All | Uphill | Uphill |
| Torch Attitude | All | All | Forehand[a] | Forehand |
| Maximum Single-Pass Fillet Weld Size | F, V | Fillet | 1/2 in [12 mm] | 1/4 in [6 mm] |
| | H, OH | | 3/8 in [10 mm] | 1/4 in [6 mm] |
| | All[b] | | 5/16 in [8 mm] | 1/4 in [6 mm] |
| Maximum Fill Pass Thickness | All | All | 1/4 in [6 mm] | 1/4 in [6 mm] |
| Maximum Single Pass Layer Width | All | Root opening >3/8 in [10 mm], or | Split Layers | Split Layers |
| | | Any layer of width w | w > 1/2 in [12 mm] use Split Layers | w > 3/8 in [10 mm] use Split Layers |

[a] Backhand allowed for root passes if qualified by PQR.
[b] For heat-treatable aluminum alloys that are to be postweld precipitation-age-hardened only.



Copyright American Welding Society
Provided by IHS under license with AWS
No reproduction or networking permitted without license from IHS
Licensee=University of Texas Revised Sub Account/5620001114
Not for Resale, 08/29/2012 23:44:22 MDT

**Table 4.5**
**Maximum Holding Times for Forming and Straightening (see 4.18.4)**

| Holding Temperature[a] °F | Holding Temperature[a] °C | 2219-T31, T351, T37, 6005-T5, 6061-T4, T5, T6, Alclad 6061-T4, T5, T6, 6063-T5, T6, 6351-T5[b] | 1060, 1100, 3003, 3004, Alclad 3003, Alclad 3004, 5005, 5050, 5052, 5454, 5652, 443.0[c] | 5083 5086 5154 5254 5456 514.0 535.0[c] | 7005-T53[d] | A201.0-T4 354.0-T4 C355.0-T4 356.0-T4 A356.0-T4 357.0-T4 A357.0-T4 359.0-T4 A444.0-T4[e] |
|---|---|---|---|---|---|---|
| 800 | 427 | NR | 50 h | 50 h | 50 h | NR |
| 500 | 260 | NR | 50 h | 50 h | NR | NR |
| 450 | 232 | 5 min | 50 h | 50 h | NR | NR |
| 425 | 218 | 15 min | 50 h | 50 h | NR | NR |
| 400 | 204 | 30 min | 50 h | 50 h | NR | NR |
| 375 | 191 | 2 h | 50 h | NR | NR | NR |
| 350 | 177 | 10 h | 50 h | NR | NR | NR |
| 250–325 | 121–163 | 50 h | 50 h | NR | NR | Note e |

[a] Equal formability may be obtained with shorter periods of heating at correspondingly higher temperatures. Time at temperature for clad alloys should be kept at a minimum to prevent diffusion of the cladding into the core alloy. Heating should be as rapid as possible, particularly for temperatures 400°F [204°C] and above. Excessive time to approach the desired temperatures can have deleterious effects similar to those resulting from excess time at temperature.
[b] Losses in strength for these alloys in the T5 and T6 tempers will not exceed about 5% when heated at the temperature and for the periods shown. Strength of the T4 temper alloys will increase.
[c] These alloys will be annealed at 650°F [343°C] and above.
[d] Refer to 4.18.4.3.
[e] Refer to 4.18.4.4.

Note: NR = Not recommended.



Copyright American Welding Society
Provided by IHS under license with AWS
No reproduction or networking permitted without license from IHS
Licensee=University of Texas Revised Sub Account/5620001114
Not for Resale, 08/29/2012 23:44:22 MDT

**Table 4.6**
**Weld Appearance (see 4.19) (Dimensions in inches [mm])**

| Issue | Statically Loaded Structures | | Cyclically Loaded Structures | |
|---|---|---|---|---|
| Cracks | None | | None | |
| Fusion between adjacent layers of weld metal and between weld metal and base metal | Required | | Required | |
| Fillet maximum convexity | Width of Weld Face or Individual Surface Bead<br>≤5/16 [8]<br>>5/16 [8] to <1 [25]<br>≥1 [25] | | Maximum Convexity<br>1/16 [2]<br>1/8 [3]<br>3/16 [5] | |
| Fillet maximum concavity | Throat shall not be undersize | | Throat shall not be undersize | |
| Craters | Underfilled craters in fillet welds are acceptable | | Craters must be filled | |
| Fillet weld maximum undersize over no more than 10% of the weld length | Specified Weld Size<br>≤3/16 [5]<br>1/4[6]<br>≥5/16 [8] | | Maximum Undersize<br>1/16 [2]<br>3/32 [2.5]<br>1/8 [3] | |
| Groove weld maximum reinforcement | t ≤ 3/8 [10] | 3/32 [2.5] | t ≤ 3/8 [10] | 3/32 [2.5] |
| | 3/8 [10] < t ≤ 3/4 [20] | 1/8 [3] | 3/8 [10] < t ≤ 3/4 [20] | 1/8 [3] |
| | t > 3/4 [20] | 3/16 [5] | t > 3/4 [20] | 3/16 [5] |
| Groove welds maximum underfill | None | | None | |
| Undercut limits | For material <1 [25] thick, undercut <1/32 [1] except undercut <1/16 [2] for any cumulative length up to 2 [50]. For material >1 [25] thick, undercut <1/16 [2]. | | No more than 0.01 [0.25] for welds transverse to tensile stress; otherwise no more than 1/32 [1] | |
| Scratch or arc strike maximum depth | Same as undercut | | Same as undercut | |
| Surface porosity | Shall not exceed limits given in 5.15.1 | | Shall not exceed limits given in 5.15.2 | |



Copyright American Welding Society
Provided by IHS under license with AWS
No reproduction or networking permitted without license from IHS
Licensee=University of Texas Revised Sub Account/5620001114
Not for Resale, 08/29/2012 23:44:22 MDT

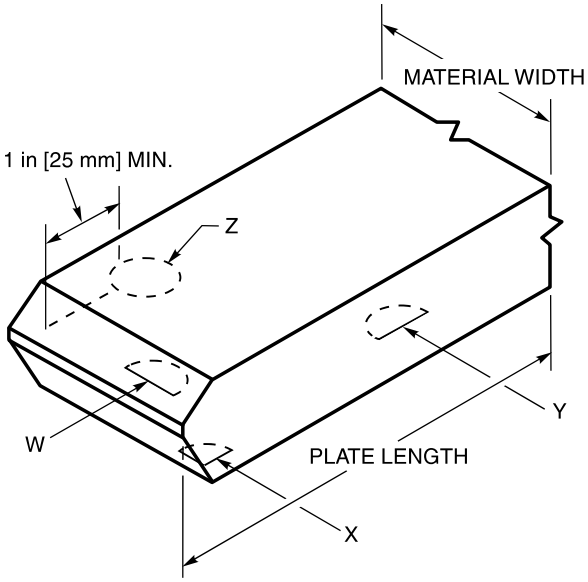


**Figure 4.1—Edge Discontinuities in Cut Plate (see 4.11.4.3)**



Copyright American Welding Society
Provided by IHS under license with AWS
No reproduction or networking permitted without license from IHS
Licensee=University of Texas Revised Sub Account/5620001114
Not for Resale, 08/29/2012 23:44:22 MDT

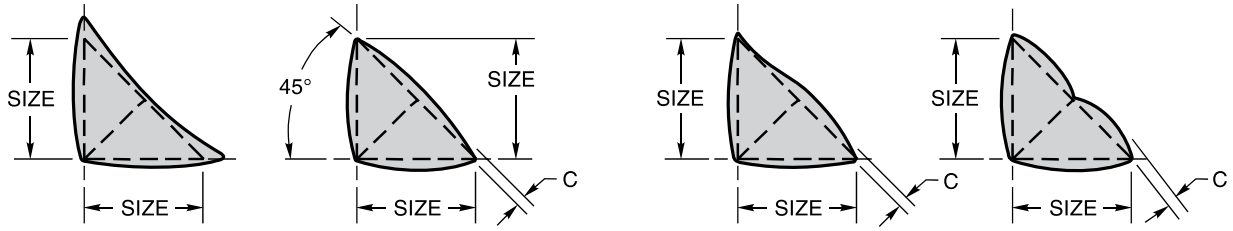


NOTE: CONVEXITY, C, OF A WELD OR INDIVIDUAL SURFACE BEAD SHALL NOT EXCEED THE LIMITS GIVEN IN TABLE 4.6.

**(A) DESIRABLE FILLET WELD PROFILES** **(B) ACCEPTABLE FILLET WELD PROFILES**

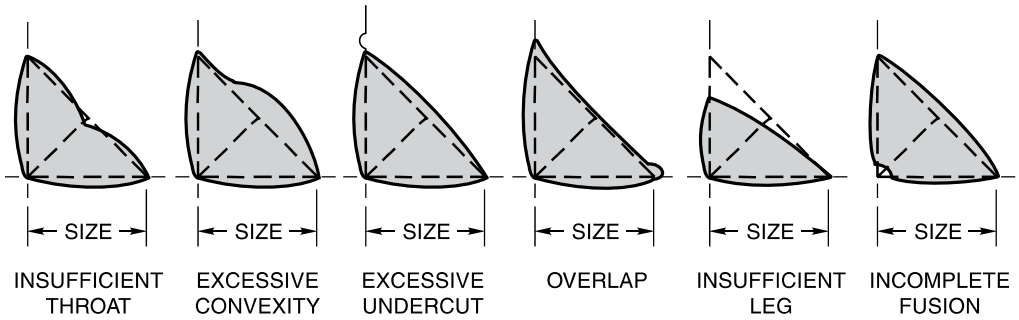


**(C) UNACCEPTABLE FILLET WELD PROFILES**

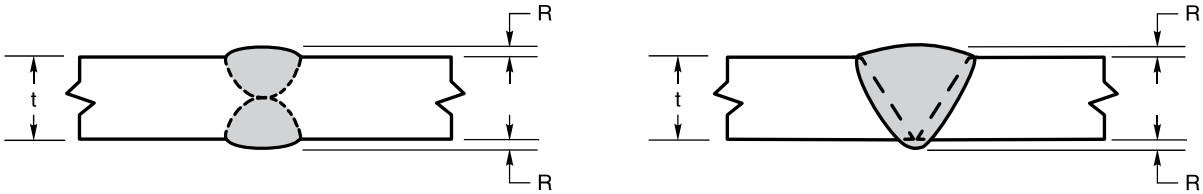


MAXIMUM REINFORCEMENT FOR GROOVE WELDS

| THICKNESS, t | | MAXIMUM REINFORCEMENT, R | |
|---|---|---|---|
| in | mm | in | mm |
| t ≤ 3/8 | t ≤ 10 | 3/32 | 2 |
| 3/8 < t ≤ 3/4 | 10 < t ≤ 19 | 1/8 | 3 |
| t > 3/4 | t > 19 | 3/16 | 5 |

**(D) ACCEPTABLE PROFILE, DOUBLE GROOVE WELD IN BUTT JOINT** **(E) ACCEPTABLE PROFILE, GROOVE WELD IN BUTT JOINT WELDED FROM ONE SIDE**

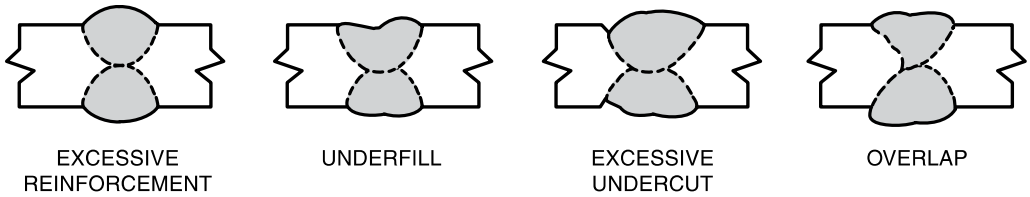


**(F) UNACCEPTABLE PROFILES, GROOVE WELDS IN BUTT JOINTS**

**Figure 4.2—Acceptable and Unacceptable Weld Profiles (see 4.19)**



Copyright American Welding Society
Provided by IHS under license with AWS
No reproduction or networking permitted without license from IHS
Licensee=University of Texas Revised Sub Account/5620001114
Not for Resale, 08/29/2012 23:44:22 MDT

# 5. Inspection

## *Part A*
## *General Requirements*

## 5.1 General

**5.1.1** For the purpose of this code, fabrication/erection inspection and testing and verification inspection and testing are separate functions. Fabrication/erection inspection and testing shall be performed as necessary prior to assembly, during assembly, during welding, and after welding to ensure that materials and workmanship meet the requirements of the contract documents. Verification inspection and testing shall be performed in a timely manner to avoid delays in the work.

Fabrication/erection inspection and testing is the responsibility of the Contractor, unless otherwise provided in the contract documents. Verification inspection and testing is the prerogative of the Engineer (Owner) who may perform this function or, when provided in the contract, waive independent verification, or stipulate that both erection and verification inspections shall be performed by the Contractor.

**5.1.2** The fabrication/erection Inspector is the duly designated person who acts for, and on behalf of, the Contractor on all inspection and quality matters within the scope of the contract documents. The Verification Inspector is the duly designated person who acts for, and in behalf of, the Owner or Engineer on all inspection and quality matters within the scope of the contract documents. When the term *Inspector(s)* is used without further qualification, it applies equally to erection and verification within the limits of responsibility described in 5.1.1.

### 5.1.3 Inspector Qualification

**5.1.3.1** Inspectors responsible for acceptance or rejection of material and workmanship shall be qualified. The basis of Inspector qualification shall be documented. If the Engineer elects to specify the basis of inspector qualification, it shall be so stated in contract documents.

The following are acceptable qualification bases:

(1) Current or previous certification as an AWS Certified Welding Inspector (CWI) in conformance with the provisions of AWS QC1, *Standard for AWS Certification of Welding Inspectors*, or

(2) Current or previous qualification by the Canadian Welding Bureau (CWB) to the requirements of the Canadian Standard Association (CSA) Standard W178.2, *Certification of Welding Inspectors*, or

(3) An Engineer or technician who, by training or experience, or both, in metals fabrication, inspection, and testing, is competent to perform inspection of the work.

**5.1.3.2** The qualification of an Inspector shall remain in effect indefinitely, provided the Inspector remains active in inspection of welded aluminum fabrication, unless there is specific reason to question the Inspector's ability.

**5.1.3.3** The Inspector may be supported by Assistant Inspectors who may perform specific inspection functions under the supervision of the Inspector. Assistant Inspectors shall be qualified by training and experience to perform the specific functions to which they are assigned. The work of Assistant Inspectors shall be regularly monitored by the Inspector, generally on a daily basis.

**5.1.3.4** Inspectors and Assistant Inspectors shall have passed an eye examination with or without corrective lenses to prove near vision acuity of Jaeger J2 at a distance 12 in to 17 in [300 mm to 430 mm]. Eye examination of all inspection personnel shall be required every three years or less, if necessary, to demonstrate adequacy.

**5.1.3.5** The Engineer shall have the authority to verify the qualification of Inspectors.



Copyright American Welding Society
Provided by IHS under license with AWS
No reproduction or networking permitted without license from IHS
Licensee=University of Texas Revised Sub Account/5620001114
Not for Resale, 08/29/2012 23:44:22 MDT

**5.1.4** The Inspector shall ascertain that all fabrication and erection by welding is performed in conformance with the requirements of the contract documents.

**5.1.5** The Inspector shall be furnished complete, detailed drawings showing the size, length, type, and location of all welds to be made. The Inspector shall be furnished the portion of the contract documents that describes material and quality requirements for the products to be fabricated or erected, or both.

**5.1.6** The Inspector shall be notified in advance of the start of operations subject to inspection and verification.

## 5.2 Inspection of Materials

The Inspector shall make certain that only materials conforming to the requirements of this code are used.

## 5.3 Inspection of WPS Qualification and Equipment

**5.3.1** The Inspector shall review all WPSs to be used for the work and make certain they conform to the requirements of this code.

**5.3.2** The Inspector shall inspect the welding equipment to be used for the work to make certain that it conforms to 4.6.

## 5.4 Inspection of Welder, Welding Operator, and Tack Welder Qualifications

**5.4.1** The Inspector shall allow welding to be performed only by welders, welding operators, and tack welders who are qualified in conformance with the requirements of 3.3 or shall make certain that all welders, welding operators, or tack welders have previously demonstrated their qualifications under other acceptable supervision.

**5.4.2** When the quality of a welder's, welding operator's, or tack welder's work appears to be below the requirements of this code, the Inspector may require that the welder, welding operator, or tack welder demonstrate an ability to produce sound welds by means of a simple test, such as the fillet weld break test or by requiring complete requalification in conformance with Clause 3, Part D.

**5.4.3** The Inspector shall require requalification of any qualified welder, welding operator, or tack welder who has for a period exceeding 6 months not used the process for which the welder, welding operator, or tack welder was qualified.

## 5.5 Inspection of Work and Records

**5.5.1** The Inspector shall make certain that the size, length, and location of all welds conform to the requirements of this code, and to the detail drawings, and that no unspecified welds have been added without approval.

**5.5.2** The Inspector shall make certain that only WPSs are employed which meet the requirements of 3.1 and are qualified in conformance with 3.2.

**5.5.3** The Inspector shall, at regular intervals, observe joint preparation, assembly practice, the welding technique and performance of each welder, welding operator, and tack welder to make certain that the applicable requirements of this code are met.

**5.5.4** The Inspector shall examine the work to make certain that it meets the requirements of 5.14. Size and contour of welds shall be measured with suitable gages. Visual inspection for cracks in welds and base metal and other discontinuities should be aided by a strong light, magnifiers, or such other devices as may be found helpful.

**5.5.5** Inspectors shall identify with a distinguishing mark or other recording methods all parts or joints that have been inspected and accepted. Any recording method which is mutually agreeable may be used. Cyclically loaded members shall not be die stamped without the approval of the Engineer.

**5.5.6** The Inspector shall keep a record of qualifications of all welders, welding operators, and tack welders, all WPS qualifications or other tests that are made, and such other information as may be required.

## 5.6 Obligations of the Contractor

**5.6.1** The Contractor shall be responsible for visual inspection in conformance with Clause 5.14 and correction of all deficiencies in materials and workmanship.

**5.6.2** The Contractor shall comply with all requests of the Inspector(s) to correct deficiencies in materials and workmanship as provided in the contract documents.

**5.6.3** In the event that faulty welding or its removal for rewelding damages the base metal so that, in the judgement of the Engineer, its retention is not in conformance with the intent of the contract documents, the Contractor shall remove and replace the damaged base metal or shall compensate for the deficiency in a manner approved by the Engineer.

**5.6.4** When NDT other than visual inspection is specified in the contract documents, it shall be the Contractor's



Copyright American Welding Society
Provided by IHS under license with AWS
No reproduction or networking permitted without license from IHS
Licensee=University of Texas Revised Sub Account/5620001114
Not for Resale, 08/29/2012 23:44:22 MDT

responsibility to ensure that all specified welds meet the quality requirements of 5.14, whichever is applicable.

**5.6.5** If NDT other than visual inspection is not specified in the contract documents but is subsequently requested by the Owner, the Contractor shall perform any requested testing or shall allow any testing to be performed in conformance with 5.7. The Owner shall be responsible for all associated costs including handling, surface preparation, NDT, and repair of discontinuities other than those listed in 5.14, whichever is applicable, at rates mutually agreeable between Owner and Contractor.

## 5.7 Nondestructive Testing

The NDT procedures described in this code have been in use for many years and are capable of providing reasonable assurance of weld integrity; however, some users of the code incorrectly consider each method equally capable of detecting all injurious deficiencies. Users of the code should become familiar with all the limitations of NDT methods to be used, particularly the inability to detect and characterize planar defects with specific flaw orientations. (The limitations and complementary use of each method are explained in the latest edition of AWS B1.10, *Guide for the Nondestructive Examination of Welds.*)

**5.7.1** When NDT other than visual is to be required, it shall be so stated in the contract documents. This information shall designate the categories of welds to be examined, the extent of examination of each category, and the method or methods of testing.

**5.7.2** Welds inspected by NDT that do not meet the requirements of this code shall be repaired in conformance with 4.20.

**5.7.3** When RT is used, the procedure and technique shall conform to Part B of this clause.

**5.7.4** When UT is used, the procedure and technique shall conform to Part C of this clause.

**5.7.5** For detecting discontinuities that are open to the surface, PT may be used. The methods set forth in ASTM E 165, *Standard Recommended Practice for Liquid Penetrant Inspection Method*, shall be used and the standards of acceptance shall conform to 5.14, whichever is applicable.

### 5.7.6 Personnel Qualification

**5.7.6.1** Personnel performing NDT other than visual shall be qualified in conformance with the current edition of the American Society for Nondestructive Testing *Recommended Practice No. SNT-TC-1A* (see Annex A). The qualification requirements for individuals performing NDT are:

(1) NDT Level I and working under a Level II, or

(2) NDT Level II.

**5.7.6.2** Certification of Level I and Level II individuals shall be performed by a Level III individual who has been certified by (1) The American Society for Nondestructive Testing, or (2) has the education, training, experience, and has successfully passed the written examination prescribed in SNT-TC-1A.

**5.7.6.3** Personnel performing NDT under the requirements of 5.7.6 need not be qualified nor certified under the requirements of AWS QC1.

## 5.8 Extent of Testing

Contract documents shall clearly identify the extent of NDT (types, categories, or location) of welds to be tested.

**5.8.1** Weld joints requiring testing by contract specification shall be tested for their full length, unless partial or spot testing is specified.

**5.8.2** When partial testing is specified, the locations and lengths of welds or categories of weld to be tested shall be clearly designated in the contract documents.

**5.8.3** When spot testing is specified, the number of spots in each designated category of welded joint to be tested in a stated length of weld or a designated segment of weld shall be included in the contract documents. Each spot test shall cover at least 4 in [100 mm] of the weld length.

When spot testing reveals indications of rejectable discontinuities that require repair, the extent of those discontinuities shall be explored. Two additional spots in the same segment of weld joint shall be taken at locations away from the original spot. The location of the additional spots shall be agreed upon between the Contractor and the Verification Inspector. When either of the two additional spots show discontinuities that require repair, the entire segment of weld represented by the original spot shall be completely tested. If the weld involves more than one segment, two additional spots in each segment shall be tested at locations agreed upon by the Contractor and the Verification Inspector, subject to the foregoing interpretation.

**5.8.4** NDT test personnel shall, prior to testing, be furnished or have access to relevant information regarding weld joint geometries, material thicknesses, and welding



Copyright American Welding Society
Provided by IHS under license with AWS
No reproduction or networking permitted without license from IHS
Licensee=University of Texas Revised Sub Account/5620001114
Not for Resale, 08/29/2012 23:44:22 MDT

processes used in making the weldment. NDT personnel shall be apprised of any subsequent repairs to the weld.

## *Part B*
## *Radiographic Testing of Groove Welds in Butt Joints*

## 5.9 General

**5.9.1** The procedures and standards set forth in Part B govern RT of welds when such inspection is required by the contract documents as provided in 5.7. The requirements listed herein are specifically for testing groove welds in butt joints in plates, shapes, and bars by X-ray or gamma-ray sources. The methodology shall conform to ASTM E 94, *Standard Recommended Practice for Radiographic Testing,* and ASTM E 142, *Standard Method for Controlling Quality of Radiographic Testing,* and ASTM E 747, *Controlling Quality of Radiographic Testing Using Wire Penetrameters,* and ASTM E 1032, *Radiographic Examination of Weldments.*

**5.9.2** Variations in testing procedures, equipment, and acceptance standards may be used upon agreement between the Contractor and the Owner. Such variations include, but are not limited to, the following: RT of fillet, T, and corner welds; changes in source-to-film distance; unusual application of film; unusual hole-type image quality indicator (IQI) applications (including film side-hole-type IQI); and RT of thicknesses greater than 6 in [150 mm], film types, densities and variations in exposure, development, and viewing techniques.

## 5.10 RT Procedures

**5.10.1** Radiographs shall be made using a single source of either x-ray or gamma radiation. The radiographic sensitivity shall be judged based on hole type or wire image quality indicators (IQI). RT technique and equipment shall provide sufficient sensitivity to clearly delineate the hole-type IQIs and the essential holes and the wire-type IQIs and the essential wires as described in 5.10.7, Tables 5.1 and 5.2, and Figures 5.5 and 5.6. Identifying letters and numbers shall show clearly in the radiograph.

**5.10.2** RT shall be performed in conformance with all applicable safety requirements. A summary of references for safe RT procedures is listed in Annex J.

**5.10.3** When the contract documents require the removal of weld reinforcement, the welds shall be prepared for RT by grinding as described in 3.19.3. Other weld surfaces need not be ground or otherwise smoothed for purposes of RT unless surface irregularities between the weld and base metal could obscure objectionable weld discontinuities.

**5.10.3.1** Weld tabs shall be removed prior to RT unless otherwise approved by the Engineer.

**5.10.3.2** When required by 4.7.2 or other provisions of the contract documents, backing shall be removed and the surface shall be finished smooth and flush by mechanical means prior to RT.

**5.10.3.3** When weld reinforcement or backing, or both, are not removed or wire IQI alternate placement is not used, aluminum shims which extend at least 1/8 in [3 mm] beyond three sides of the required hole type IQI or wire IQI shall be placed under the hole type IQI or wire IQI so that the total thickness of aluminum between the hole type IQI and the film is approximately equal to the average thickness of the weld measured through its reinforcement and backing.

**5.10.4** Radiographic film shall be as described in ASTM E 94 (see Annex A). Lead foil screens shall be used as described in ASTM E 94. Fluorescent screens are prohibited.

**5.10.5** Radiographs shall be made with a single source of radiation centered as near as practicable with respect to the length and width of that portion of the weld being examined.

**5.10.5.1** Gamma ray sources, regardless of size, shall be capable of meeting the geometric unsharpness requirement of Article 2, Section V of the ASME *Boiler and Pressure Vessel Code* (see Annex A).

**5.10.5.2** The source-to-subject distance shall not be less than the total length of film being exposed in a single plane. This provision does not apply to panoramic exposures made under the requirements of 5.10.8.2.

**5.10.5.3** The source-to-subject distance shall not be less than seven times the thickness of the weld plus reinforcement and backing, if any, nor shall the inspecting radiation penetrate any portion of the weld represented in the radiograph at an angle greater than 26.5° line normal to the weld surface.

**5.10.6** X-ray units and iridium 192 may be used as a source for all RT, provided they have adequate penetrating ability. Other radiographic sources shall be subject to the approval of the Engineer.

**5.10.7 IQI Selection and Placement.** IQIs shall be selected and placed on the weldment in the area of interest being radiographed as follows:



Copyright American Welding Society
Provided by IHS under license with AWS
No reproduction or networking permitted without license from IHS
Licensee=University of Texas Revised Sub Account/5620001114
Not for Resale, 08/29/2012 23:44:22 MDT

**5.10.7.1** For joints of approximately uniform thickness, at least two IQIs shall show clearly on each radiograph 10 in [250 mm] or greater in length, as in Figure 5.1. Radiographs of such joints less than 10 in [250 mm] in length need show only one IQI as in Figure 5.2.

When a transition in thickness occurs at a welded joint, each film shall clearly show two IQIs on the thinner plate and one IQI on the thicker plate, as in Figure 5.3.

When a radiograph representing a transition in weld thickness is less than 10 in [250 mm] long, only one IQI need be applied to each thickness represented in the radiograph, as in Figure 5.4. Hole-type IQIs shall be placed on the source side, parallel to the weld joint, with the essential holes at the outer end as in Figures 5.1 and 5.3.

**5.10.7.2** The thickness of the IQI and the essential hole diameter shall be as described in Table 5.1, except that a smaller essential hole or a thinner IQI, or both, may be selected by the Contractor, provided all other provisions for radiography are met.

The thickness of the weldment shall be measured as T1 or T2, or both, at the locations in Figure 5.1, 5.2, 5.3, or 5.4, and may be increased to provide for the thickness of allowable weld reinforcement, provided shims are used as described in 5.10.3.3. Aluminum backing shall not be considered part of the weld or reinforcement in the IQI selection. The IQI representative of the maximum weld thickness may be placed on either the sloping surface within 1 in [25 mm] of the fusion line, or on a shim of suitable thickness on the thinner side. On steeper slopes, tilting of the IQI may obscure the images of the holes.

**5.10.7.3** IQIs for aluminum shall be manufactured from a radiographically similar aluminum alloy and shall conform to the dimensions in Figure 5.5 or 5.6. For more detailed information, ASTM E 142 should be consulted. Each hole-type IQI shall be manufactured with three holes, one of which shall be of a diameter equal to twice the IQI thickness (2T). The diameter of the two remaining holes shall be selected by the manufacturer. Hole-type IQI designations 10 through 25 shall contain a 4T hole.

**5.10.8** Welded joints shall be radiographed and the film indexed by methods that will provide complete and continuous inspection of the joint within the limits specified to be examined. Joint limits shall show clearly in the radiographs. Short film, short screens, excessive undercut by scattered radiation, or any other process that obscures portions of the total weld length shall render the radiograph unacceptable.

**5.10.8.1** Films shall have sufficient length and shall be placed to produce at least 1/2 in [12 mm] of film, exposed to direct radiation from the source, beyond each free edge where the weld is terminated.

**5.10.8.2** Welds longer than 14 in [350 mm] may be radiographed by overlapping film cassettes and making a single exposure, or by using a single film cassette and making separate exposures. The requirements of 5.10.5 shall apply.

**5.10.8.3** To check for backscattered radiation, a lead symbol "B," 1/2 in [12 mm] high, 1/16 in [2 mm] thick shall be attached to the back of each film cassette. If the "B" image appears on the radiograph, the radiograph shall be unacceptable.

**5.10.9** Film widths shall be sufficient to depict all portions of the welded joint, including the HAZ, and shall provide sufficient additional space for the required hole-type IQIs or wire IQI and film identification without infringing upon the area of interest in the radiograph.

**5.10.10 Quality of Radiographs.** All radiographs shall be free from mechanical, chemical, or other blemishes to the extent that they might mask or be confused with the image of any discontinuity in the area of interest in the radiograph. Such blemishes include, but are not limited to the following:

(1) fogging;

(2) processing defects such as streaks, water marks, or chemical stains;

(3) scratches, finger marks, crimps, dirt, static marks, smudges, or tears;

(4) loss of detail due to poor screen-to-film contact;

(5) false indications due to defective screens or internal faults.

**5.10.11 Density Limitations.** The transmitted film density through the radiographic image of the body of the required IQI(s) and the area of interest shall be 1.8 minimum (preferably in the range from 2.5 to 3.5) for single-film viewing for radiographs made with an X-ray source and 2.0 minimum for radiographs made with a gamma-ray source. For composite viewing of double-film exposures, the minimum density shall be 2.6. Each radiograph of a composite set shall have a minimum density of 1.3. The maximum density shall be 4.0 for either single or composite viewing.

**5.10.11.1** The film shall be processed to develop a film blackening measured by the H&D radiographic density expressed as:

$$D = \text{H\&D (radiographic) density} = \log_{10}\left(\frac{I_o}{I}\right)$$



Copyright American Welding Society
Provided by IHS under license with AWS
No reproduction or networking permitted without license from IHS
Licensee=University of Texas Revised Sub Account/5620001114
Not for Resale, 08/29/2012 23:44:22 MDT

where

$I_o$ = light intensity on the film, and

I = light transmitted through the film

**5.10.11.2** When transitions in weld thickness are radiographed and the ratio of the thickness of the thicker section to the thickness of the thinner section is 3 or greater, radiographs should be exposed to produce single-film densities of 3.0 to 4.0 in thinner sections. When this is done, the minimum density requirements of 5.10.11 shall be waived unless otherwise provided in the contract documents.

**5.10.12** A radiograph identification mark and two location identification marks shall be placed on the weldment at each radiograph location. A corresponding radiograph identification mark and two location identification marks, all of which shall show in the radiograph, shall be produced by placing lead numbers or letters, or both, over each of the identical identification and location marks made on the weld joint to provide a means for matching the developed radiograph to the weld. Additional identification information may be preprinted no less than 3/4 in [20 mm] from the edge of the weld or produced on the radiograph by placing lead figures on the weldment.

Information required to show on the radiograph shall include the Owner's contract identification, initials of the radiographic inspection company, initials of the fabricator, the fabricator's shop order number, the radiographic identification mark, the date, and the weld repair number, if applicable.

**5.10.13 Edge Blocks.** Edge blocks shall be used when radiographing groove welds greater than 1/2 in [12 mm] in thickness. The edge blocks shall have a length sufficient to extend beyond each side of the weld centerline for a minimum distance equal to the weld thickness, but no less than 2 in [50 mm], and shall have a thickness equal to or greater than the thickness of the weld. The minimum width of the edge blocks shall be equal to half the weld thickness, but not less than 1 in [25 mm]. The edge blocks shall be centered on the weld with a snug fit against the plate being radiographed, allowing no more than 1/16 in [2 mm] gap. Edge blocks shall be made of radiographically clean aluminum of the same M number as the material being inspected and the surface shall have a finish of ANSI 125 µin [3 µm] or smoother (see Figure 5.7).

## 5.11 Acceptability of Welds

Welds inspected by RT that do not meet the requirements of 5.15 this code, shall be repaired in conformance with 4.20. Tungsten inclusions shall be treated as porosity.

## 5.12 Examination, Report, and Disposition of Radiographs

**5.12.1** The RT operator shall maintain a record of the welds or portions of welds subjected to RT and include descriptions, pictures, or sketches of the discontinuity indications developed (see Annex G for a suggested report form for RT).

**5.12.2** The Contractor shall provide a variable intensity illuminator (viewer) with spot-review or masked spot-review capability. The viewer shall incorporate a means for adjusting the size of the spot under examination. The viewer shall have sufficient capacity to properly illuminate radiographs with an H&D density of 4.0. Film review shall be done in an area of subdued light.

**5.12.3** Before a weld subject to RT by the Contractor for the Owner is accepted, all of its radiographs, including any that show unacceptable quality prior to repair, and a report interpreting them, shall be submitted to the Verification Inspector.

**5.12.4** A full set of radiographs of welds subject to RT by the Contractor for the Owner, including any that show unacceptable quality prior to repair, shall be delivered to the Owner upon completion of the work. The Contractor's obligation to retain radiographs shall cease: (1) upon delivery of this full set to the Owner, or (2) one full year after the completion of the Contractor's work, provided the Owner is given prior written notice that the radiographs are scheduled for disposal.

# *Part C*
# *Ultrasonic Testing of Groove Welds*

## 5.13 General

**5.13.1** When UT is required by the contract documents, the extent of testing, the procedure, and the acceptance criteria shall be specified therein.

**5.13.2** The tester shall maintain a record of the welds or portions of welds subjected to UT. The Contractor's obligation to retain these records shall cease: (1) upon delivery of a full set to the Owner, or (2) one full year after completion of the Contractor's work, provided the Owner is given prior written notice that the records are scheduled for disposal.



Copyright American Welding Society
Provided by IHS under license with AWS
No reproduction or networking permitted without license from IHS
Licensee=University of Texas Revised Sub Account/5620001114
Not for Resale, 08/29/2012 23:44:22 MDT

# *Part D*
# *Acceptance Criteria*

## 5.14 Visual Inspection

All welds shall be visually inspected and are acceptable if they satisfy 4.19.

## 5.15 RT

**5.15.1 RT of Statically Loaded Nontubular Connections.** Welds that are subject to RT in addition to visual inspection shall have no cracks and shall be unacceptable if the radiograph shows any of the types of discontinuities given in 5.15.1.1, 5.15.1.2, and 5.15.1.3.

**5.15.1.1** Individual discontinuities, having the greatest dimension of 3/32 in [2 mm] or greater, shall not have the following:

(1) A discontinuity with greatest dimension larger than 2/3 of the weld size, or 3/4 in [20 mm], or

(2) A discontinuity closer than three times its greatest dimension to the end of a groove weld subject to primary tensile stress.

**5.15.1.2** A group of in-line discontinuities, some having a dimension of 3/32 in [2 mm] or greater, shall not have the following:

(1) The sum of the greatest dimensions of all discontinuities within a length equal to six times the weld size greater than the weld size (When the length of weld being examined is less than six times the weld size, the sum of the greatest dimensions shall be proportionally less than the weld size), or

(2) A space between two adjacent discontinuities less than three times the greatest dimension of the larger of the discontinuities in the pair under consideration.

**5.15.1.3** The sum of the greatest dimensions of a group of relevant in-line discontinuities smaller than 3/32 in [2 mm] in any linear inch of weld shall not exceed 3/8 in [10 mm]. Only that porosity whose major dimension exceeds 1/32 in [1 mm], shall be considered in evaluating the RT soundness criteria.

**5.15.2 Acceptance Criteria for RT of Tubular Connections and Cyclically Loaded Nontubular Connections**

**5.15.2.1 Cracks.** Cracks are unacceptable.

**5.15.2.2 Discontinuities.** Only discontinuities whose major dimension exceeds 1/64 in [0.4 mm] shall be considered in evaluating RT. Discontinuities may be circular, elliptical, conical, or irregular in shape. Discontinuities may be a void or a void like indication (porosity) or solid tungsten or nonmetallic inclusion. Copper or ferrous inclusions are unacceptable. Discontinuities with sharp tails are unacceptable.

(1) **Maximum Area.** Discontinuities in any 3 in [75 mm] length of weld shall not exceed that given in Table 5.3. Assorted shapes of discontinuities are acceptable if the various shapes combined do not exceed the total area of discontinuities allowed in Table 5.3.

For welds larger than in Table 5.3, the total area of discontinuities determined from radiography shall not exceed 0.067 E $in^2$ [1.70E $mm^2$] in any 3 in [75 mm] length of weld, where E is the weld size. If the weld is less than 3 in [75 mm] long, the total allowable area of discontinuities shall be reduced in direct proportion to the weld length.

(2) **Maximum Dimension.** The maximum dimension of discontinuities shall be the lesser of E/4 or 1/8 in [3 mm], except that the maximum dimension of an isolated discontinuity separated from an adjacent large discontinuity by 1-1/4 in [30 mm] or more shall be the lesser of E/3 or 1/4 in [6 mm].

(3) **Aligned Discontinuities.** Aligned discontinuities are acceptable if the sum of the major dimensions of the discontinuities does not exceed E/2 in a length of 6E, or 3 in [75 mm], whichever is less. A sequence of three or more discontinuities shall be considered to be aligned when they touch a line parallel to the length of the weld drawn through the center of the first and last discontinuities.

**5.15.2.3 Illustration of Requirements.** Figure 5.8 illustrates the application of requirements given in 5.15.2.2 and Table 5.3.

**5.15.2.4 Joint Penetration.** For cyclically loaded connections:

(1) Complete penetration is required in groove welds.

(2) Complete penetration is not required in fillet welds if the throat of the weld meets the specified weld size.

For statically loaded tubular connections:

The length of incomplete joint penetration shall not exceed 20% of the length of weld.

**5.15.2.5 Incomplete Fusion.** Incomplete fusion is unacceptable, except in fillet weld roots, where incomplete fusion may be classified as incomplete joint penetration when it is less than 20% of the weld size E.



Copyright American Welding Society
Provided by IHS under license with AWS
No reproduction or networking permitted without license from IHS
Licensee=University of Texas Revised Sub Account/5620001114
Not for Resale, 08/29/2012 23:44:22 MDT

## 5.16 UT

When UT is required by the contract documents, the testing procedure and acceptance criteria shall be specified therein.

## 5.17 PT

Welds that are subject to PT shall be unacceptable if the inspection confirms the presence of surface cracks.



Copyright American Welding Society
Provided by IHS under license with AWS
No reproduction or networking permitted without license from IHS
Licensee=University of Texas Revised Sub Account/5620001114
Not for Resale, 08/29/2012 23:44:22 MDT

**Table 5.1**
**Hole-Type IQI Requirements (see 5.10.1)**

| Nominal Material Thickness Range, in | Nominal Material Thickness Range, mm | IQI Identification | IQI Thickness in | IQI Thickness mm | Essential Hole |
|---|---|---|---|---|---|
| Up to 0.25 incl. | Up to 6 incl. | 10 | 0.010 | 0.25 | 4T |
| Over 0.25 to 0.375 | Over 6 through 10 | 12 | 0.012 | 0.30 | 4T |
| Over 0.375 to 0.50 | Over 10 through 13 | 15 | 0.015 | 0.38 | 4T |
| Over 0.50 to 0.625 | Over 13 through 16 | 15 | 0.015 | 0.38 | 4T |
| Over 0.625 to 0.75 | Over 16 through 19 | 17 | 0.017 | 0.43 | 4T |
| Over 0.75 to 0.875 | Over 19 through 22 | 20 | 0.020 | 0.51 | 4T |
| Over 0.875 to 1.00 | Over 22 through 25 | 20 | 0.020 | 0.51 | 4T |
| Over 1.00 to 1.25 | Over 25 through 31 | 25 | 0.025 | 0.63 | 4T |
| Over 1.25 to 1.50 | Over 31 through 38 | 30 | 0.030 | 0.76 | 2T |
| Over 1.50 to 2.00 | Over 38 through 50 | 35 | 0.035 | 0.89 | 2T |
| Over 2.00 to 2.50 | Over 50 through 65 | 40 | 0.040 | 1.02 | 2T |
| Over 2.50 to 3.00 | Over 65 through 75 | 45 | 0.045 | 1.14 | 2T |
| Over 3.00 to 4.00 | Over 75 through 100 | 50 | 0.050 | 1.27 | 2T |
| Over 4.00 to 6.00 | Over 100 through 150 | 60 | 0.060 | 1.52 | 2T |

**Table 5.2**
**Wire IQI Requirements (see 5.10.1)**

| Nominal Material Thickness[a] Range, in | Nominal Material Thickness[a] Range, mm | Source Side Maximum Wire Diameter in | Source Side Maximum Wire Diameter mm | Film Side[b] Maximum Wire Diameter in | Film Side[b] Maximum Wire Diameter mm |
|---|---|---|---|---|---|
| Up to 0.25 incl. | Up to 6 incl. | 0.010 | 0.25 | 0.008 | 0.20 |
| Over 0.25 to 0.375 | Over 6 to 10 | 0.013 | 0.33 | 0.010 | 0.25 |
| Over 0.375 to 0.625 | Over 10 to 16 | 0.016 | 0.41 | 0.013 | 0.33 |
| Over 0.625 to 0.75 | Over 16 to 19 | 0.020 | 0.51 | 0.016 | 0.41 |
| Over 0.75 to 1.50 | Over 19 to 38 | 0.025 | 0.63 | 0.020 | 0.51 |
| Over 1.50 to 2.00 | Over 38 to 50 | 0.032 | 0.81 | 0.025 | 0.63 |
| Over 2.00 to 2.50 | Over 50 to 65 | 0.040 | 1.02 | 0.032 | 0.81 |
| Over 2.50 to 4.00 | Over 65 to 100 | 0.050 | 1.27 | 0.040 | 1.02 |
| Over 4.00 to 6.00 | Over 100 to 150 | 0.063 | 1.60 | 0.050 | 1.27 |
| Over 6.00 to 8.00 | Over 150 to 200 | 0.100 | 2.54 | 0.063 | 1.60 |

[a] Single-wall RT thickness (for tubulars).
[b] Applicable to tubular structures only.



Copyright American Welding Society
Provided by IHS under license with AWS
No reproduction or networking permitted without license from IHS
Licensee=University of Texas Revised Sub Account/5620001114
Not for Resale, 08/29/2012 23:44:22 MDT

**Table 5.3**
**Maximum Acceptable Discontinuity[a, b] in Radiographs for Any 3 in [75 mm] Length of Weld (Tubular and Cyclically Loaded Nontubular Connections) [see 5.15.2.2(1)]**

| (E) Weld Size[c] | | Total Area Allowed | | Large Discontinuities | | | Medium Discontinuities | | | Fine Discontinuities | | |
|---|---|---|---|---|---|---|---|---|---|---|---|---|
| | | | | Major Dimension | | Max. No. | Major Dimension | | Max. No. | Major Dimension | | Max. No. |
| in | mm | in$^2$ | mm$^2$ | in | mm | | in | mm | | in | mm | |
| 1/8 | 3 | 0.008 | 5 | 0.031 | 0.79 | 9 | 0.025 | 0.64 | 16 | 0.018 | 0.46 | 31 |
| 1/4 | 6 | 0.017 | 11 | 0.063 | 1.60 | 4 | 0.032 | 0.81 | 21 | 0.020 | 0.50 | 54 |
| 3/8 | 10 | 0.024 | 15.5 | 0.094 | 2.39 | 3 | 0.037 | 0.94 | 23 | 0.022 | 0.56 | 65 |
| 1/2 | 13 | 0.033 | 21 | 0.125 | 3.17 | 2 | 0.041 | 1.04 | 25 | 0.026 | 0.66 | 62 |
| 5/8 | 16 | 0.042 | 27 | 0.156 | 3.96 | 3 | 0.043 | 1.09 | 28 | 0.029 | 0.74 | 63 |

[a] Discontinuities may be circular, elliptical, conical, or irregular in shape. The major dimension shall be measured in determining the size of an indication. The discontinuities may be a void or a tungsten or nonmetallic inclusion. Copper or ferrous inclusions shall not be allowed in the welds.
[b] Only discontinuities whose major dimension exceeds 1/64 in [0.4 mm] shall be considered relevant in evaluating the RT soundness criteria.
[c] Values for intermediate sizes shall be determined by interpolation.

Note: The maximum number of pores shall be determined by the total area allowed for the type of discontinuities (large, medium, or fine) being counted.



Copyright American Welding Society
Provided by IHS under license with AWS
No reproduction or networking permitted without license from IHS
Licensee=University of Texas Revised Sub Account/5620001114
Not for Resale, 08/29/2012 23:44:22 MDT

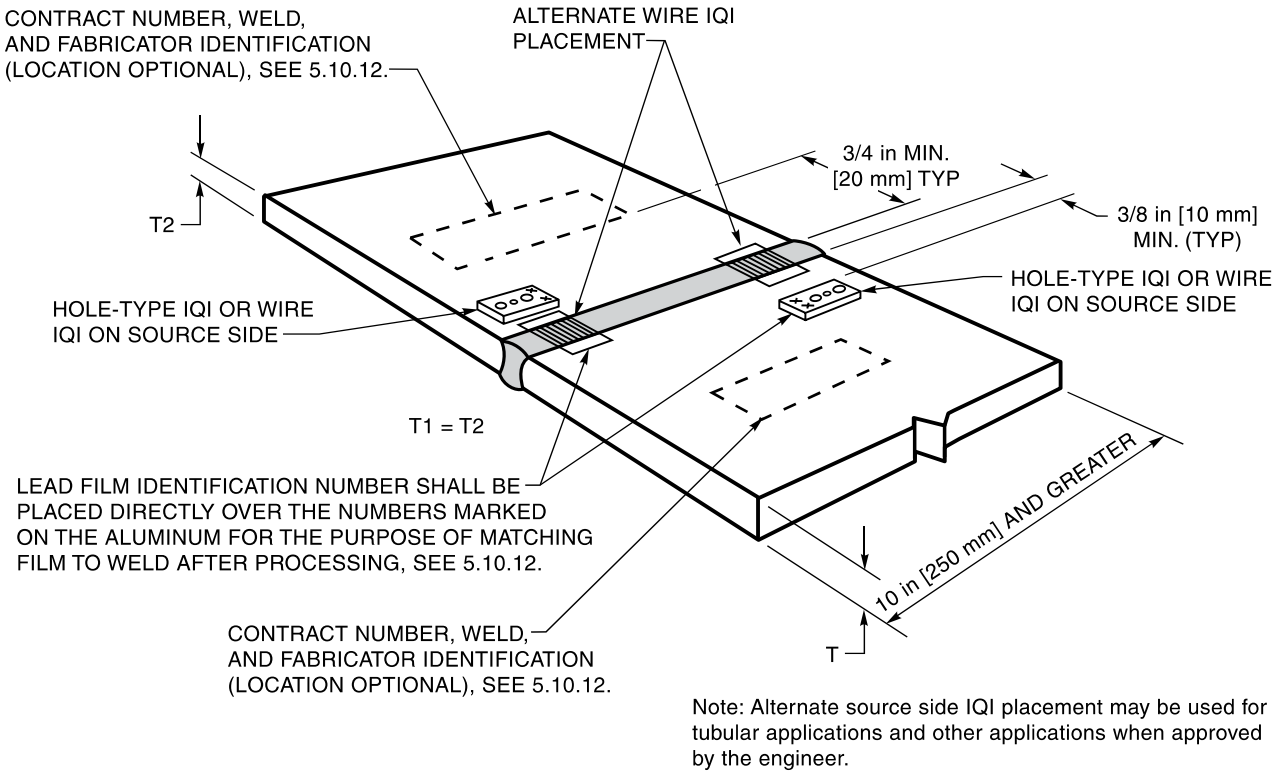


**Figure 5.1—Radiographic Identification and Hole-Type or Wire IQI Locations on Approximately Equal Thickness Joints 10 in [250 mm] and Greater in Length (see 5.10.7)**



Copyright American Welding Society
Provided by IHS under license with AWS
No reproduction or networking permitted without license from IHS
Licensee=University of Texas Revised Sub Account/5620001114
Not for Resale, 08/29/2012 23:44:22 MDT

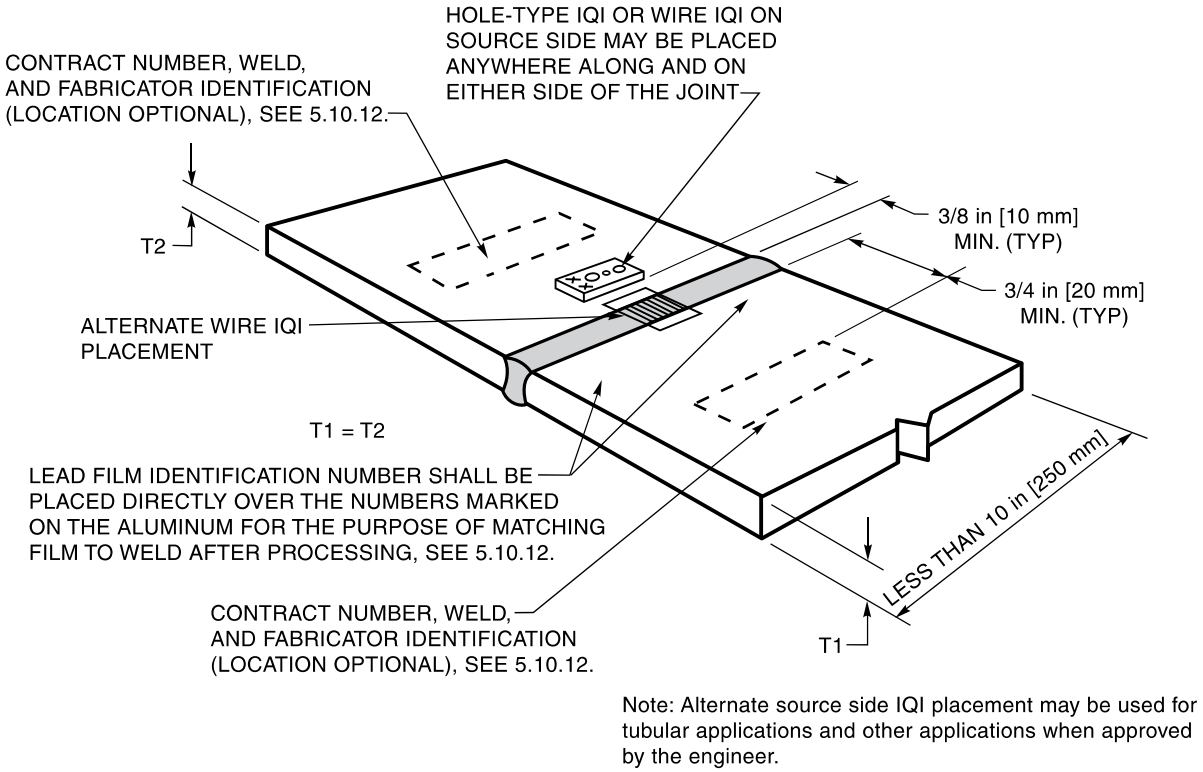


Note: Alternate source side IQI placement may be used for tubular applications and other applications when approved by the engineer.

**Figure 5.2—Radiographic Identification and Hole-Type or Wire IQI Locations on Approximately Equal Thickness Joints Less Than 10 in [250 mm] in Length (see 5.10.7)**



Copyright American Welding Society
Provided by IHS under license with AWS
No reproduction or networking permitted without license from IHS
Licensee=University of Texas Revised Sub Account/5620001114
Not for Resale, 08/29/2012 23:44:22 MDT

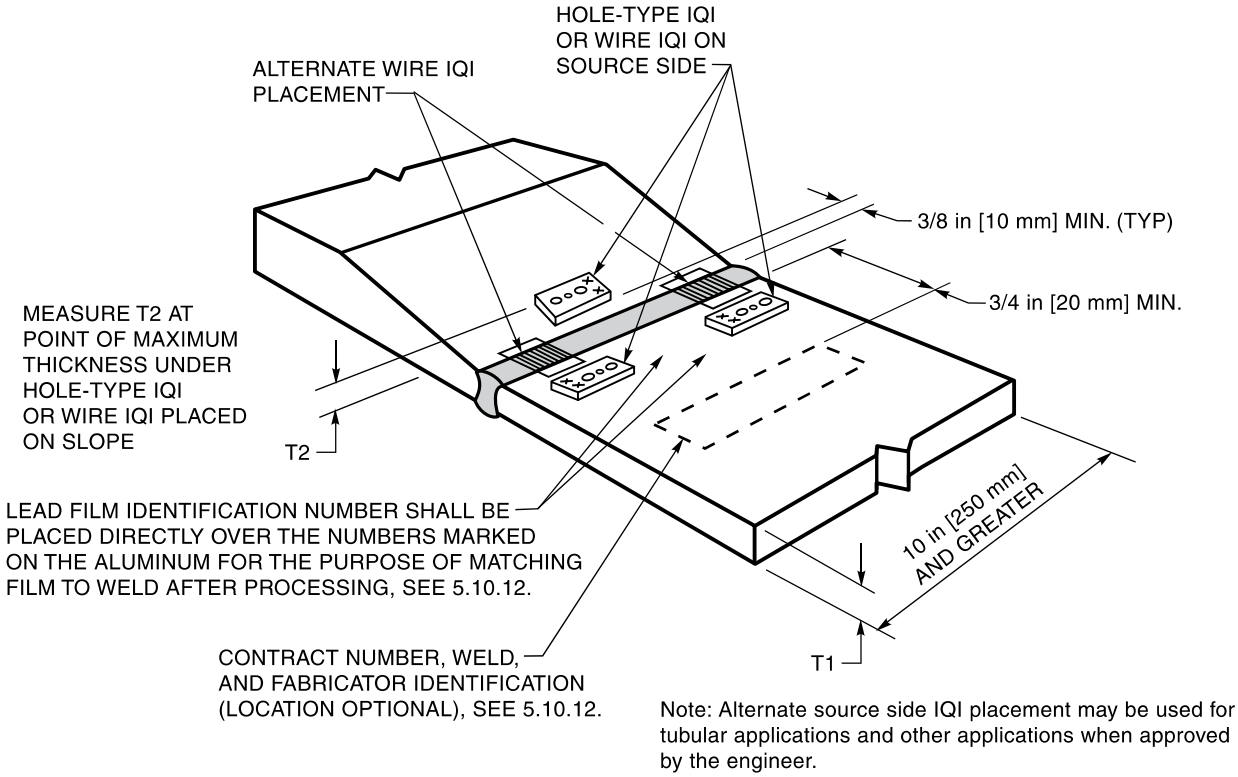


**Figure 5.3—Radiographic Identification and Hole-Type or Wire IQI Locations on Transition Joints 10 in [250 mm] and Greater in Length (see 5.10.7)**



Copyright American Welding Society
Provided by IHS under license with AWS
No reproduction or networking permitted without license from IHS
Licensee=University of Texas Revised Sub Account/5620001114
Not for Resale, 08/29/2012 23:44:22 MDT

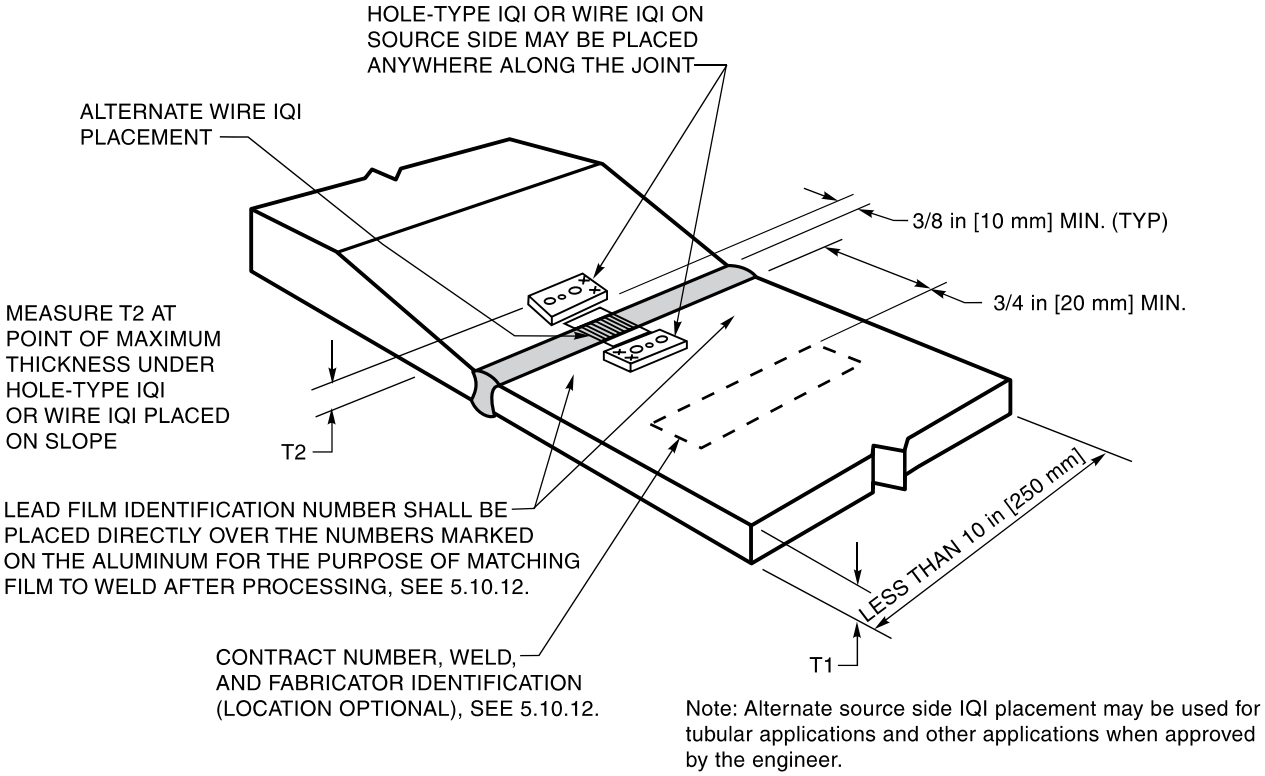


**Figure 5.4—Radiographic Identification and Hole-Type or Wire IQI Locations on Transition Joints Less Than 10 in [250 mm] in Length (see 5.10.7.1)**



Copyright American Welding Society
Provided by IHS under license with AWS
No reproduction or networking permitted without license from IHS
Licensee=University of Texas Revised Sub Account/5620001114
Not for Resale, 08/29/2012 23:44:22 MDT

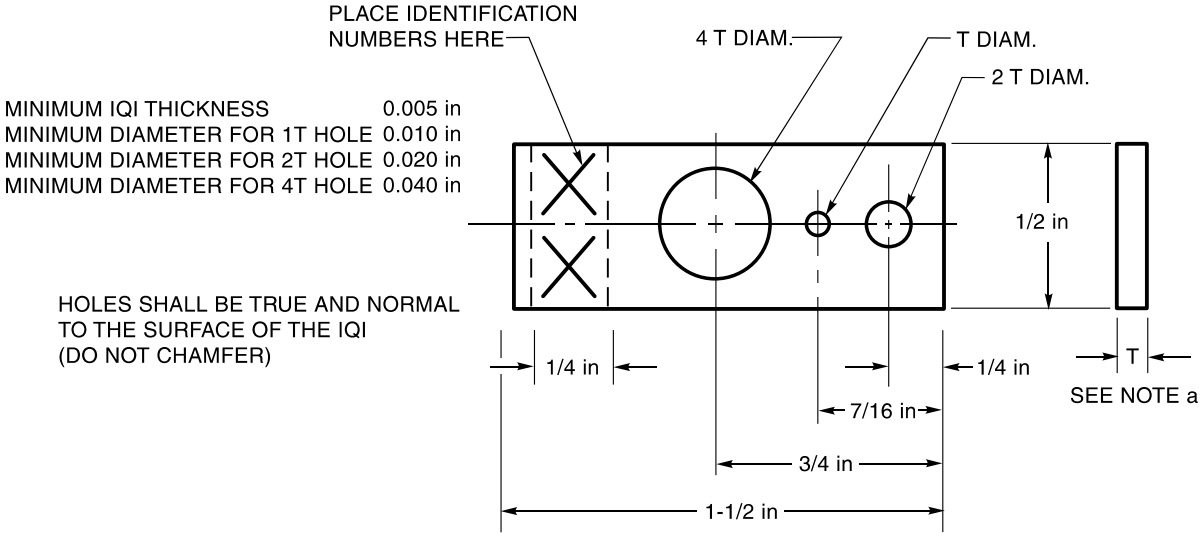


DESIGN FOR IQI THICKNESS FROM 0.005 in AND INCLUDING 0.050 in:
FROM 0.005 in THROUGH 0.023 in, SEE ASTM E 142, TABLE 1
OVER 0.012 in THROUGH 0.020 in,MADE IN 0.0025 in INCREMENTS
OVER 0.020 in THROUGH 0.050 in, MADE IN 0.005 in INCREMENTS
IQI THICKNESSES BETWEEN THE INCREMENTS INDICATED MAY BE USED, PROVIDED THEY DO NOT EXCEED THE MAXIMUM THICKNESS REQUIRED.

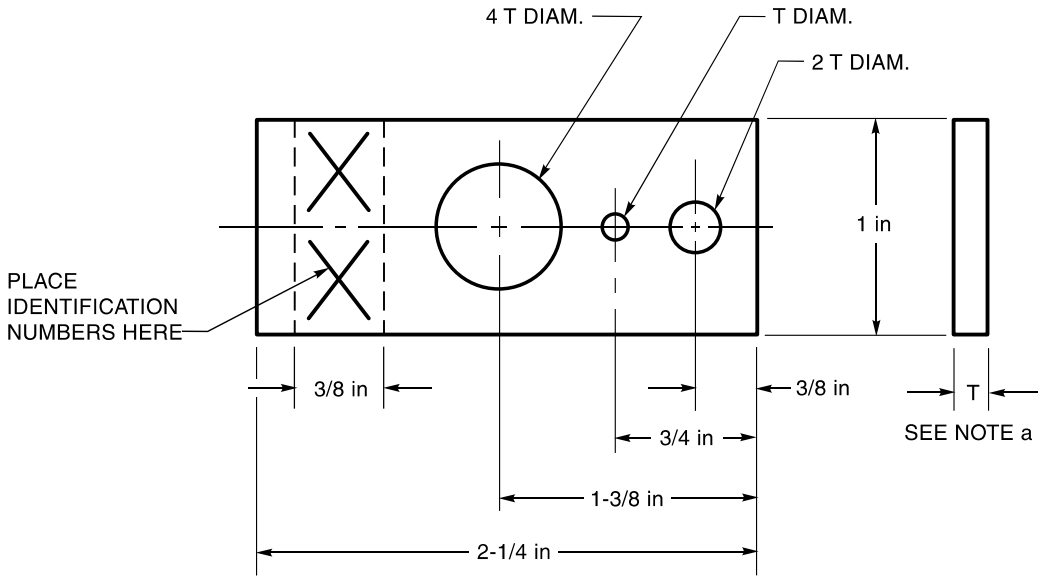


DESIGN FOR IQI THICKNESS FROM 0.060 in TO 0.160 in INCLUSIVE, MADE IN 0.010 in INCREMENTS.

[a] Tolerances on IQI thickness and hole diameter shall be ±10% or one half of the thickness increment between IQI sizes, whichever is smaller.

Note: For the Essential Hole—See Table 5.1.

**Figure 5.5—Hole-Type IQI Design (U.S. Customary) (see 5.10.7.3)**



Copyright American Welding Society
Provided by IHS under license with AWS
No reproduction or networking permitted without license from IHS
Licensee=University of Texas Revised Sub Account/5620001114
Not for Resale, 08/29/2012 23:44:22 MDT

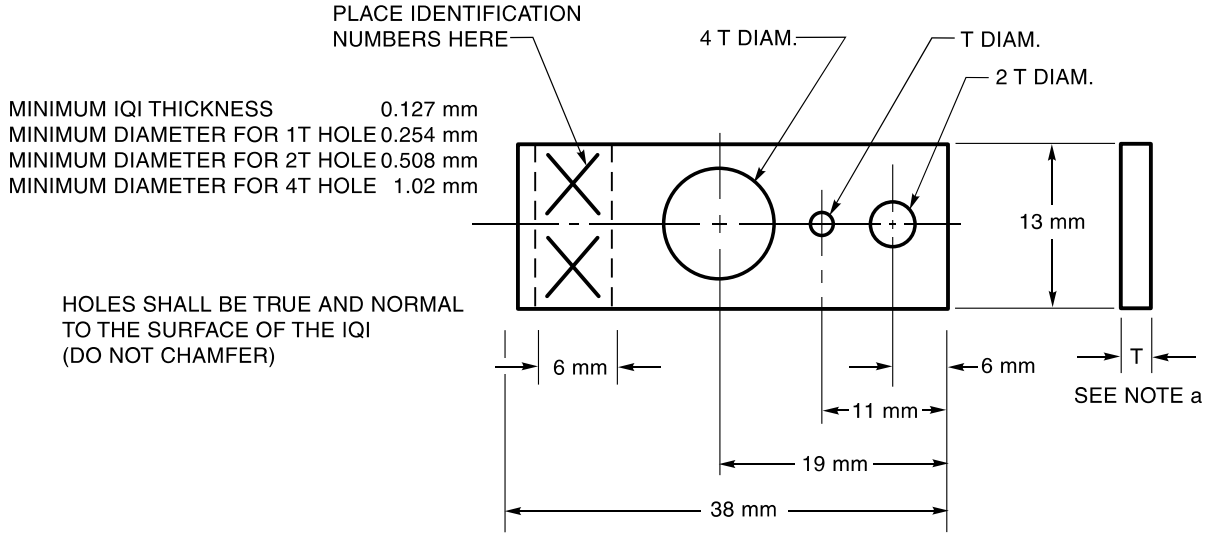


DESIGN FOR IQI THICKNESS FROM 0.127 mm AND INCLUDING 1.27 mm:
FROM 1.127 mm THROUGH 0.305 mm, SEE ASTM E 142, TABLE 1
OVER 0.305 mm THROUGH 0.508 mm, MADE IN 0.0638 mm INCREMENTS
OVER 0.508 mm THROUGH 1.27 mm, MADE IN 0.127 mm INCREMENTS
IQI THICKNESSES BETWEEN THE INCREMENTS INDICATED MAY BE USED,
PROVIDED THEY DO NOT EXCEED THE MAXIMUM THICKNESS REQUIRED.

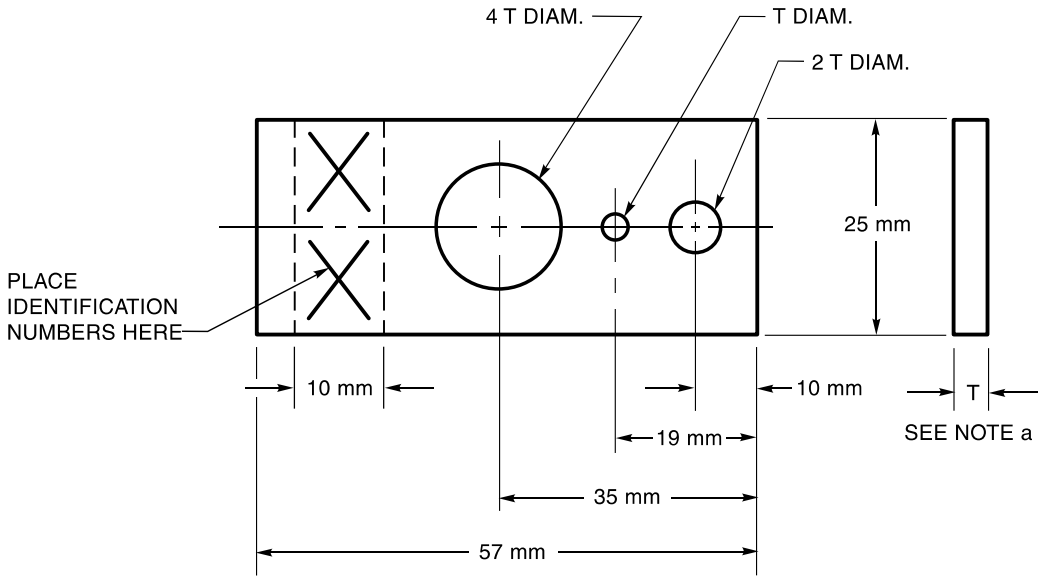


DESIGN FOR IQI THICKNESS FROM 1.52 mm TO 4.06 mm INCLUSIVE, MADE IN 0.254 mm INCREMENTS.

[a] Tolerances on IQI thickness and hole diameter shall be ±10% or one half of the thickness increment between IQI sizes, whichever is smaller.

Note: For the Essential Hole—See Table 5.1.

**Figure 5.5 (Continued)—Hole-Type IQI Design (Metric Version) (see 5.10.7.3)**



Copyright American Welding Society
Provided by IHS under license with AWS
No reproduction or networking permitted without license from IHS
Licensee=University of Texas Revised Sub Account/5620001114
Not for Resale, 08/29/2012 23:44:22 MDT

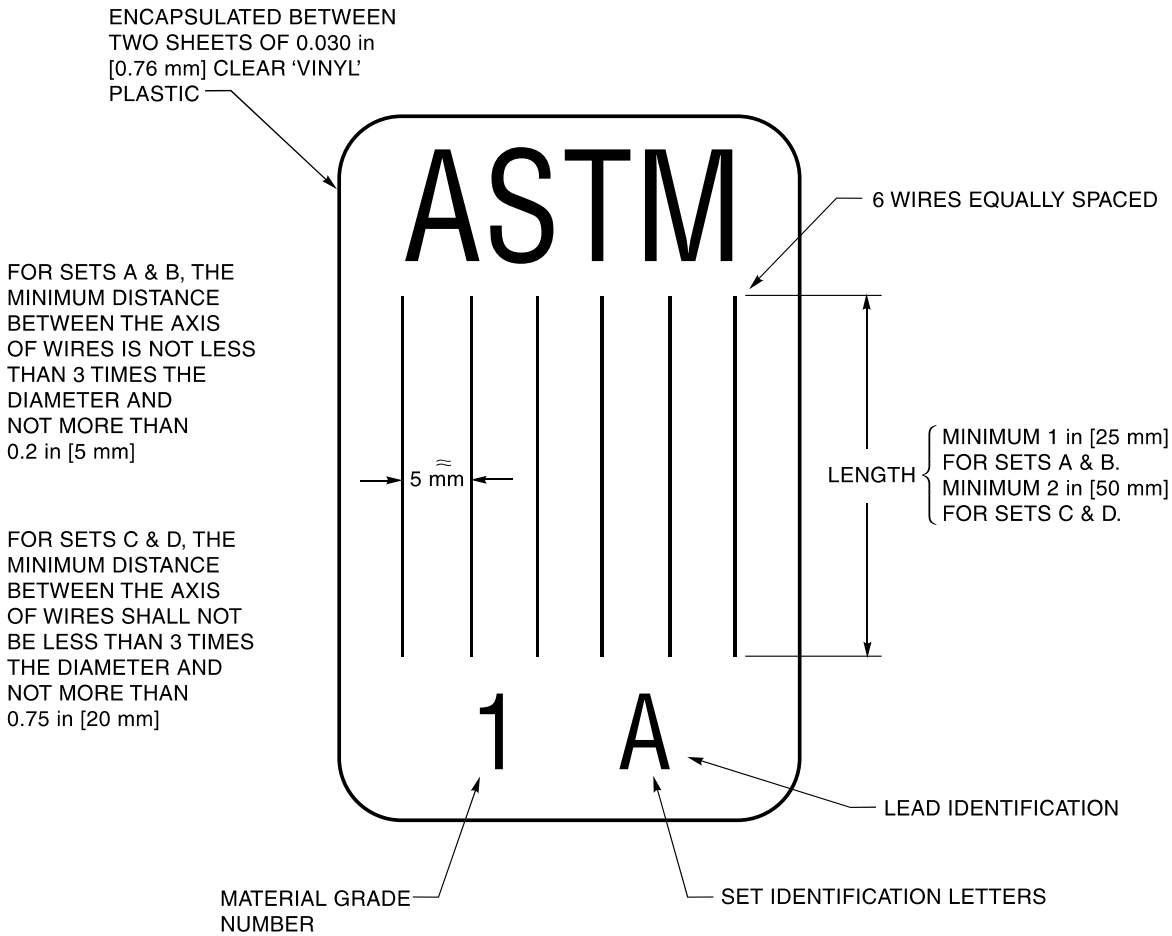


IQI Sizes

| Wire Diameter, in [mm] | | | |
|---|---|---|---|
| Set A | Set B | Set C | Set D |
| 0.0032 [0.08] | 0.010 [0.25] | 0.032 [0.81] | 0.10 [2.5] |
| 0.004 [0.1] | 0.013 [0.33] | 0.040 [1.02] | 0.125 [3.2] |
| 0.005 [0.13] | 0.016 [0.4] | 0.050 [1.27] | 0.160 [4.06] |
| 0.0063 [0.16] | 0.020 [0.51] | 0.063 [1.6] | 0.20 [5.1] |
| 0.008 [0.2] | 0.025 [0.64] | 0.080 [2.03] | 0.25 [6.4] |
| 0.010 [0.25] | 0.032 [0.81] | 0.100 [2.5] | 0.32 [8] |

**Figure 5.6—Wire IQI (see 5.10.7.3)**

(Reprinted by permission of the American Society for Testing and Materials, copyright.)



Copyright American Welding Society
Provided by IHS under license with AWS
No reproduction or networking permitted without license from IHS
Licensee=University of Texas Revised Sub Account/5620001114
Not for Resale, 08/29/2012 23:44:22 MDT

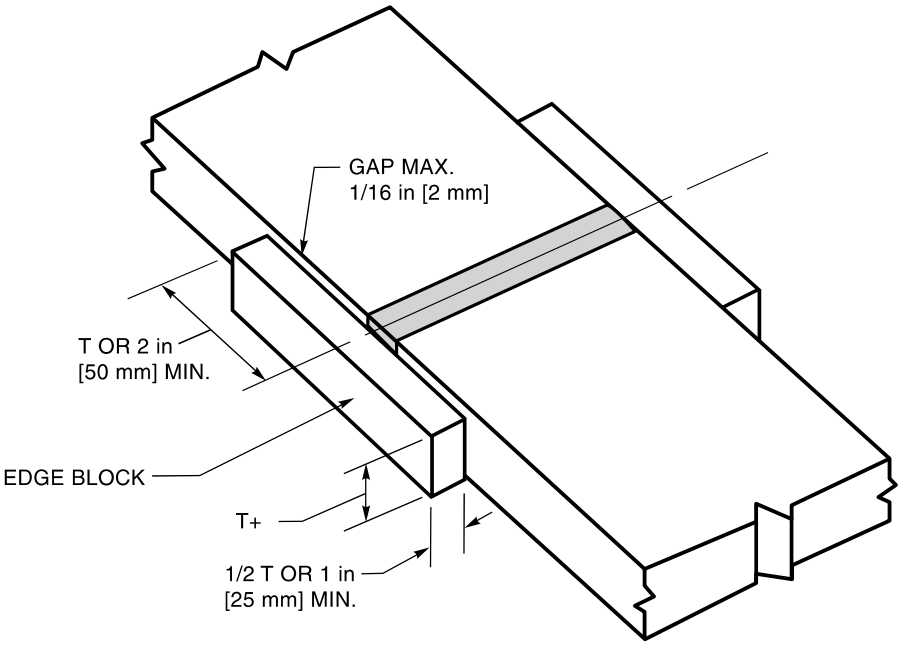


**Figure 5.7—Radiographic Edge Blocks (see 5.10.13)**

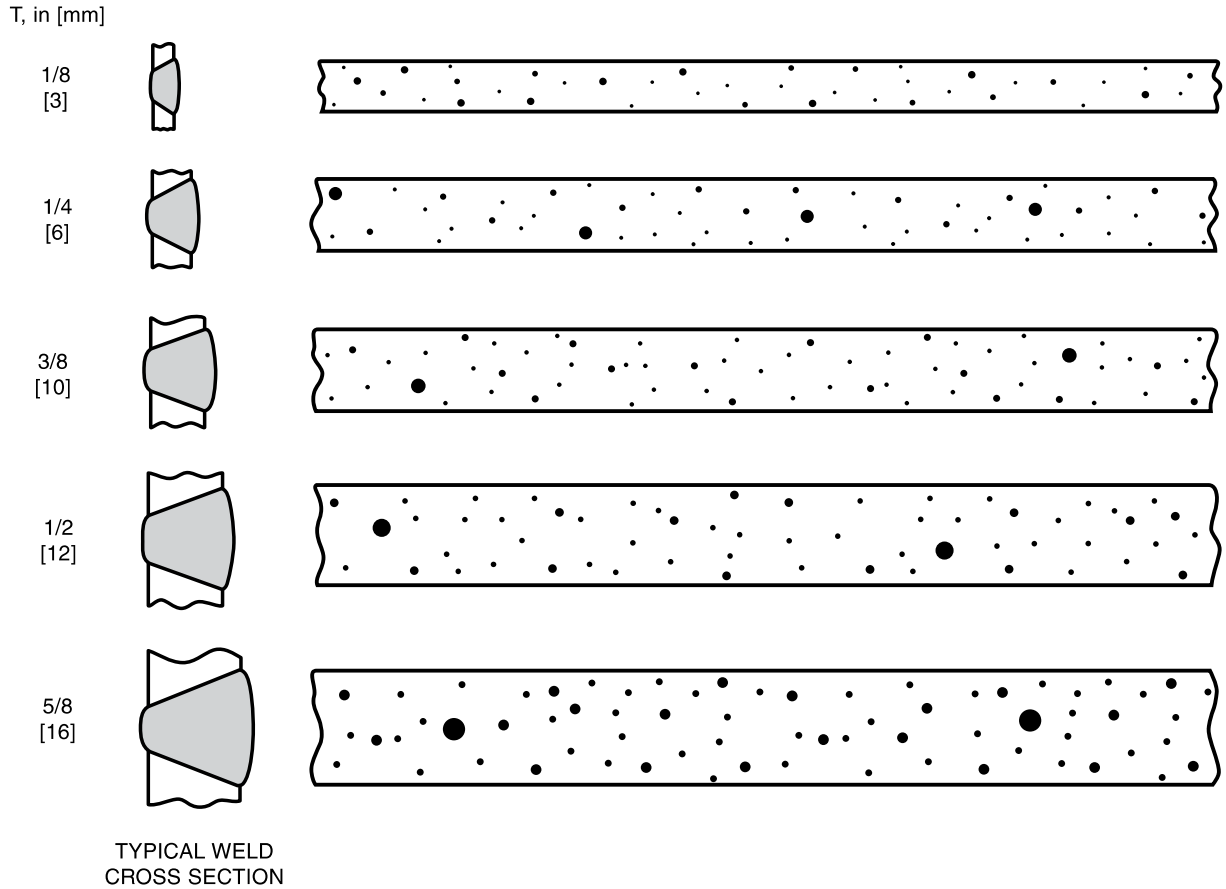


**Figure 5.8—Maximum Acceptable Discontinuity RT Images (see 5.15.2.3)**



Copyright American Welding Society
Provided by IHS under license with AWS
No reproduction or networking permitted without license from IHS
Licensee=University of Texas Revised Sub Account/5620001114
Not for Resale, 08/29/2012 23:44:22 MDT

# 6. Stud Welding

## *Part A*
## *General Requirements*

## 6.1 General

**6.1.1** This clause contains general requirements for arc stud welding and capacitor discharge stud welding of aluminum alloy studs to aluminum alloys and stipulates specific requirements for the following:

(1) mechanical properties of aluminum alloy studs

(2) workmanship, preproduction testing, qualification, and performance testing

(3) inspection of stud welding during production.

**6.1.2** At the option of the Contractor, and with the approval of the Engineer, aluminum studs may be applied by fillet welding using the GTAW process provided the following conditions are met:

**6.1.2.1** The WPS used is qualified in conformance with Clause 3, Qualification of WPSs and Personnel.

**6.1.2.2** The welder is qualified in conformance with Clause 3, Qualification of WPSs and Personnel.

**6.1.2.3** The provisions of 6.4.5 and 6.6 are met.

**6.1.2.4** The stud base shall be shaped to fit firmly against the part to which it is to be attached.

## 6.2 Material Requirements

**6.2.1** Material shall conform to the requirements of 6.10 or 6.14, as applicable.

**6.2.2** The stud shall not be anodized, painted, or coated with any substance.

**6.2.3** The Contractor shall obtain the stud manufacturer's certification that the studs conform to the applicable requirements of 6.2.

**6.2.4** Mechanical testing of aluminum stud alloys shall be in conformance with the applicable sections of ASTM B 557, *Standard Methods of Tension Testing Wrought and Cast Aluminum and Aluminum-Alloys and Magnesium-Alloy Products*, or AWS B4.0, *Standard Methods for Mechanical Testing of Welds*.

## 6.3 Workmanship

**6.3.1** Studs shall be free from oil, moisture, excessive oxide, or other deleterious matter that would adversely affect the welding operation.

**6.3.2** Base metal to which studs are to be welded shall be free of anodic coatings, moisture, or other injurious material to assure obtaining sound welds. These areas may be cleaned by etching, brushing with a stainless steel bristle brush, scraping, or grinding.

**6.3.3** Welded studs shall meet the visual inspection requirements of 6.6.

## 6.4 Qualification Requirements

**6.4.1 General.** Prior to shop or field application stud welding, WPSs shall be prepared and qualified according to the following requirements. The results of these tests shall be recorded on a stud PQR. A suggested PQR Form is shown in Annex F(e).

**6.4.2 Responsibility for Tests.** The Contractor shall be responsible for the preparation and qualification of stud WPSs. The Engineer may accept properly documented evidence of previous qualification of the stud WPSs to be employed.

**6.4.3 WPS Qualification**

**6.4.3.1 Preparation of Stud WPSs.** Stud WPSs shall be established in conformance with the limitation of variables of 6.4.4, except that a WPS established for each of two thicknesses of base metal using the same machine



Copyright American Welding Society
Provided by IHS under license with AWS
No reproduction or networking permitted without license from IHS
Licensee=University of Texas Revised Sub Account/5620001114
Not for Resale, 08/29/2012 23:44:22 MDT

settings and conditions specified in the WPS qualification record may be used for all intermediate thicknesses.

**6.4.3.2 Welding Position.** Qualification in one position qualifies for all positions.

**6.4.4 Limitation of Variables.** Any of the following changes shall require requalification of the stud WPS:

(1) A change in the base metal M-number

(2) A change in the F-number of the stud alloy or in the stud alloy if the stud has no F-number

(3) A change in the nominal size or shape of the stud base

(4) A change of more than ±25% in the base-metal thickness or thickness range qualified

(5) A change from a single shielding gas to any other gas, or to a mixture of gases, or a change of 10% or more in the specified percentage composition of the mixture

(6) A change of more than 10% in the flow rate of the shielding gas

(7) A change in ferrule geometry (ARC)

(8) A change of timer range or amperage range greater than ±5% (ARC)

(9) A change in capacitance (farads) (CAP DIS.)

(10) A change in charging voltage (CAP DIS.)

(11) A change in make or model of welding machine

(12) A change in base metal form from a flat surface to a pipe or tube surface having an outside diameter of 12 in [300 mm] or less, but not vice-versa.

**6.4.5 WPS Qualification Tests and Acceptance Criteria**

**6.4.5.1** Ten consecutively welded stud weld test specimens are required to qualify each WPS.

**6.4.5.2** The test welds shall have a well-formed circumferential flash over at least 75% of the periphery of the welded stud. The expelled metal around the base of the stud is designated as flash in conformance with the definition of upset in AWS A3.0, *Standard Welding Terms and Definitions, Including Terms for Adhesive Bonding, Brazing, Soldering, Thermal Cutting, and Thermal Spraying*. There shall be no undercutting of the stud above the welded joint.

**6.4.5.3** At the Contractor's option, all ten specimens may be bend tested or five may be bend tested and five tension tested. When the tension test is chosen, they shall be tested in conformance with Option 1 (6.4.5.6) or Option 2 (6.4.5.7).

**6.4.5.4** Bend test weld specimens shall be tested by bending each stud to an angle of at least 15° from the axis of the stud. The studs shall be left in the bent condition. A test jig as shown in Figure 6.1 or other suitable device shall be used for bending.

**6.4.5.5 Acceptance Criteria—Bend Tests.** To pass the bend test requirements, all studs shall exhibit no visible separation or fracture in the stud weld or HAZs of the base metal or stud.

**6.4.5.6 Tension Test—Option 1.** Five test specimens shall be tested using a torque testing arrangement that is substantially in conformance with Figure 6.2. Minimum torque values for F-22 alloy studs are shown in Table 6.1. Minimum torque values for other F-number studs shall be determined by the Engineer.

**6.4.5.7 Tension Test—Option 2.** Five test specimens shall be tested in tension using commercial tension testing equipment designed to properly grip the stud and base metal of the welded specimen. The load shall be applied axially until the stud fractures. The load at which the specimen fractures is the ultimate tensile load. Minimum tensile load values for F-22 alloy studs are shown in Table 6.1. Minimum tensile load values for other F-number studs shall be determined by the Engineer.

**6.4.5.8 Acceptance Criteria—Tension Tests.** To pass the tension test requirements, all five specimens (Option 1 or Option 2) shall meet the torque or tensile load values established for the stud alloy being qualified.

**6.4.6** A stud WPS shall be considered qualified if the test specimens meet the requirements of 6.4.5.2, 6.4.5.5, and 6.4.5.8.

**6.4.7 WPSs**

**6.4.7.1** A WPS shall be prepared for each stud welding application. The following information shall be included in the WPS. A suggested WPS is shown in Annex F(d).

(1) Equipment used:

(a) power supply

(b) controllers and timing equipment

(c) stud-gun type and manufacturer

(d) size and length of cable

(2) Stud Alloy

(3) A sketch showing size and shape of studs and the configuration and section to be welded.

(4) Base metal and thickness or thickness limits

(5) Gas-shield type and flow where applicable



Copyright American Welding Society
Provided by IHS under license with AWS
No reproduction or networking permitted without license from IHS
Licensee=University of Texas Revised Sub Account/5620001114
Not for Resale, 08/29/2012 23:44:22 MDT

(6) Cleaning method

(7A) For arc stud welding:

(a) timer range

(b) current and polarity

(c) amperage range

(d) lift

(7B) For capacitor discharge stud welding:

(a) capacitance and charging voltage

(b) drop height

(c) capacitor discharge method

**6.4.7.2** WPSs shall be available for examination by the Owner or the Owner's authorized representative.

## 6.5 Operator and Preproduction Qualification

**6.5.1** Before production welding begins using a particular WPS, and at the beginning of each day's or shift's production, the first two studs shall be tested using material of similar thickness (±25%) and of the same material M-number as the production material.

**6.5.2** After visual inspection to determine conformance with 6.4.5.2, the two studs shall be bent in conformance with 6.4.5.4.

**6.5.3** Failure of either of the studs to meet the criteria described in 6.5.2 shall cause the stud welding variables to be adjusted until two studs welded in conformance with the requirements of 6.5 pass the inspection requirements. If the changes to the WPS fall outside the limitation of variables in 6.4.4, a new WPS Qualification Test and WPS are required.

## 6.6 Acceptance Criteria—Production Welds

There shall be evidence of a well-formed circumferential flash over at least 75% of the periphery of the stud. There shall be no undercutting of the stud diameter above the welded joint. Welds failing to conform to these acceptance criteria shall be repaired in conformance with 6.8.

## 6.7 Mislocated Studs

**6.7.1** When mislocated studs are required to be removed, they shall be completely removed by chiseling, rotary filing, thermal cutting, or grinding using grinding wheels designated for use on aluminum.

**6.7.2** The area where the mislocated stud was applied shall be thoroughly wire brushed, as described in 6.3.2, and the surface contour of the base metal restored where required using a qualified WPS for the base metal by one of the welding processes allowed by this code.

## 6.8 Repair of Misapplied Studs

During production welding, studs that do not exhibit flash for a full 75% of the periphery of the stud may be repaired by adding a fillet weld in the area of the missing flash. The fillet weld shall meet the requirements of 6.1.2 and extend beyond the area of missing flash. Studs not meeting the code requirements of 6.6 other than deficient flash shall be removed and replaced in conformance with 6.7.

# *Part B*
# *Arc Stud Welding*

## 6.9 General Requirements

**6.9.1** **Size.** Studs shall be No. 10 [5 mm] up to and including 1/2 in [12 mm] diameter and designed for arc welding to aluminum members with the use of automatically timed stud welding equipment.

**6.9.2** A ferrule or arc shield of heat-resistant ceramic or other suitable material shall be furnished with each stud.

**6.9.3** The minimum base-metal thickness for arc stud application shall not be less than 50% of the stud diameter.

## 6.10 Material Requirements

Studs shall be made from cold drawn or extruded stock of alloys in Table 6.2. Other alloys may be used with the approval of the Engineer.

## 6.11 Workmanship

**6.11.1** Ferrules shall be clean and dry. Any ferrules which show signs of surface moisture shall be oven dried at 250°F [120°C] for a minimum of two hours before use.

**6.11.2** Ferrule geometry shall conform to the contour of the base metal.

**6.11.3** Ferrules shall be broken free from all studs after welding.



Copyright American Welding Society
Provided by IHS under license with AWS
No reproduction or networking permitted without license from IHS
Licensee=University of Texas Revised Sub Account/5620001114
Not for Resale, 08/29/2012 23:44:22 MDT

## 6.12 Technique

**6.12.1** Studs shall be welded with automatically timed stud welding equipment connected to a source of direct current (electrode positive) power. Welding current, time, shielding gas, and settings for lift and plunge should be set at optimum settings, based on past practice and recommendations of stud and equipment manufacturers.

**6.12.2** Welding grade shielding gas (argon, helium, or helium/argon mixtures) shall be used.

**6.12.3** If two or more arc stud welding guns are to be operated from the same power source, they shall be interlocked so only one gun can operate at a time, and so the power source can fully recover from making one weld before another weld is started.

# *Part C*
# *Capacitor Discharge Stud Welding*

## 6.13 General Requirements

**6.13.1** Nonflanged studs shall be limited to a maximum base diameter of 1/4 in [6 mm], and flanged stud base diameters shall be limited to a maximum of 5/16 in [8 mm], unless otherwise qualified and approved by the Engineer.

**6.13.2** For contact, gap, and drawn arc capacitor discharge stud welding, the size and shape of the stud tip or projection, or the weld-end geometry shall be designed to achieve sound welds. These characteristics and the shank shape or configuration shall be as specified in the drawings, specifications, or special provisions.

**6.13.3** No ferrule is required.

**6.13.4** Shielding gas is not required with the contact or gap capacitor discharge process. A suitable shielding gas shall be used with the drawn arc capacitor discharge process.

**6.13.5** The minimum base-metal thickness for capacitor discharge stud welding shall be no less than 25% of the base diameter of the stud.

## 6.14 Material Requirements

**6.14.1** Studs shall be made from cold drawn or extruded stock of alloys in Table 6.3. Other alloys may be used with the approval of the Engineer.

**6.14.2** Stud bases for capacitor discharge welding studs may be flanged or nonflanged.

## 6.15 Technique

**6.15.1** Studs shall be welded with equipment that ensures the capacitors are fully charged to a preset value before the stud can be welded.

**6.15.2** When required, welding grade shielding gas (argon, helium, or helium/argon mixtures) shall be used.

**6.15.3** A wetting agent may be introduced in the weld area just prior to the weld being made.



Copyright American Welding Society
Provided by IHS under license with AWS
No reproduction or networking permitted without license from IHS
Licensee=University of Texas Revised Sub Account/5620001114
Not for Resale, 08/29/2012 23:44:22 MDT

**Table 6.1**
**Minimum Required Torque Values and Tension Loads for Welding F-22 Aluminum-Alloy Studs (see 6.4.5.6 and 6.4.5.7)**

| | Tension Test: Option 1 | | Tension Test: Option 2 | |
|---|---|---|---|---|
| | Minimum Torque Value | | Minimum Tensile Load | |
| Stud Size | in·lbf | J | lbf | N |
| **Capacitor Discharge** | | | | |
| 6–32 | 3.5 | 0.4 | 375 | 1670 |
| 8–32 | 7.5 | 0.9 | 635 | 2820 |
| 10–24 | 10 | 1.1 | 770 | 3420 |
| 1/4–20 UNC | 40 | 4.5 | 1360 | 6050 |
| 5/16–18 UNC | 70 | 7.9 | 2300 | 10200 |
| **Arc** | | | | |
| 10–24 | 10 | 1.1 | 770 | 3420 |
| 1/4–20 UNC | 40 | 4.5 | 1360 | 6050 |
| 5/16–18 UNC | 70 | 7.9 | 2300 | 10200 |
| 3/8–16 UNC | 81 | 9.2 | 3250 | 14500 |
| 7/16–14 UNC | 140 | 15.8 | 4400 | 19600 |
| 1/2–13 UNC | — | — | 5950 | 26500 |

**Table 6.2**
**Stud Alloys for Arc Stud Welding of Various Base Alloys**

| Base Alloy | Stud Alloy |
|---|---|
| 1060, 1100, 3003, Alclad 3003 | 4043 |
| 3004, Alclad 3004 | 4043, 5183, 5356, 5556 |
| 5005, 5050 | 4043 |
| 5052, 5652 | 4043, 5183, 5356, 5556 |
| 5083, 5456 | 5183, 5356, 5556 |
| 5086 | 5183, 5356, 5556 |
| 5154, 5254 | 5183, 5356, 5556 |
| 5454 | 4043, 5183, 5356, 5556 |
| 6005, 6005A, 6061, Alclad 6061, 6063, 6082, 6351 | 4043, 5183, 5356, 5556 |
| 7005 | 5183, 5356, 5556 |

**Table 6.3**
**Stud Alloys for Capacitor Discharge Stud Welding of Various Base Alloys**

| Base Alloy | Stud Alloy |
|---|---|
| 1060, 1100, 3003, Alclad 3003 | 1100, 4043, 6061, 6063 |
| 2219 | 2319 |
| 3004, Alclad 3004 | 4043, 5183, 5356, 5556, 6061, 6063 |
| 5005, 5050 | 1100, 4043, 6061, 6063 |
| 5052, 5652 | 4043, 5183, 5356, 5556, 6061, 6063 |
| 5083, 5456 | 5183, 5356, 5556, 6061, 6063 |
| 5086 | 5183, 5356, 5556, 6061, 6063 |
| 5154, 5254 | 5183, 5356, 5556, 6061, 6063 |
| 5454 | 4043, 5183, 5356, 5556, 6061, 6063 |
| 6005, 6005A, 6061, Alclad 6061, 6063, 6082, 6351 | 4043, 5183, 5356, 5556, 6061, 6063 |
| 7005 | 5183, 5356, 5556 |



Copyright American Welding Society
Provided by IHS under license with AWS
No reproduction or networking permitted without license from IHS
Licensee=University of Texas Revised Sub Account/5620001114
Not for Resale, 08/29/2012 23:44:22 MDT

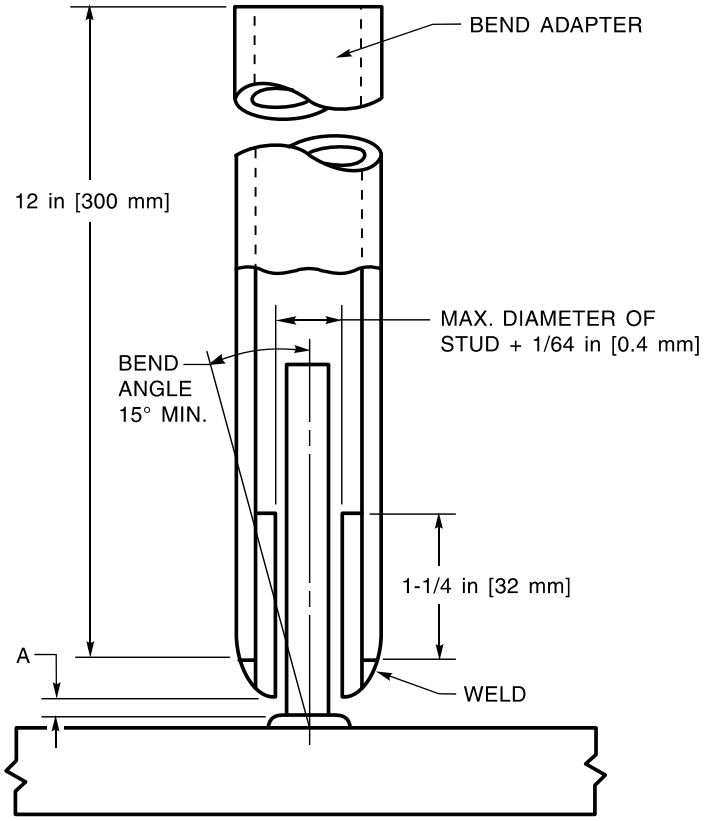


| | in | | | mm | | |
|---|---|---|---|---|---|---|
| STUD DIAMETER | 1/4 | 3/8 | 1/2 | 6 | 10 | 13 |
| ADAPTER GAP "A" | 3/16 | 7/32 | 5/16 | 3 | 5 | 8 |

**Figure 6.1—Stud Weld Bend Jig (see 6.4.5.4)**



Copyright American Welding Society
Provided by IHS under license with AWS
No reproduction or networking permitted without license from IHS
Licensee=University of Texas Revised Sub Account/5620001114
Not for Resale, 08/29/2012 23:44:22 MDT

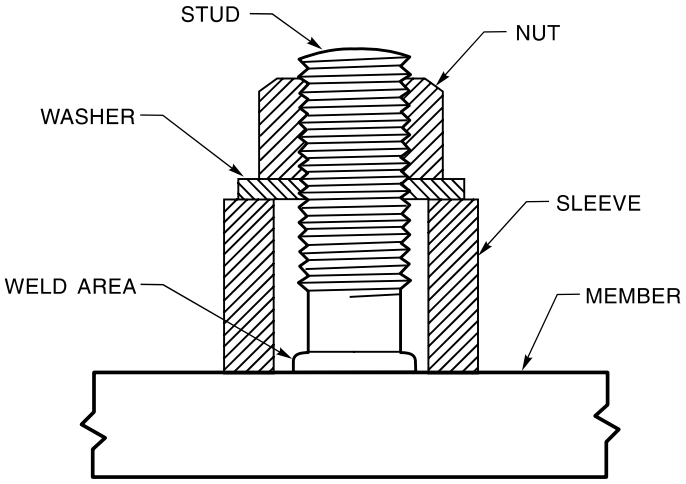


Note: The dimensions shall be appropriate to the size of the stud.
The threads of the stud shall be clean and lubricated.

**Figure 6.2—Torque Testing Arrangement for Stud Welds (see 6.4.5.6)**



Copyright American Welding Society
Provided by IHS under license with AWS
No reproduction or networking permitted without license from IHS
Licensee=University of Texas Revised Sub Account/5620001114
Not for Resale, 08/29/2012 23:44:22 MDT

This page is intentionally blank.

--`,,`,,`,,,,,,```,,,``,,`,```,,-`-`,,`,,`,`,,`---



Copyright American Welding Society
Provided by IHS under license with AWS
No reproduction or networking permitted without license from IHS

Licensee=University of Texas Revised Sub Account/5620001114
Not for Resale, 08/29/2012 23:44:22 MDT

# 7. Strengthening and Repair of Existing Structures

## 7.1 General

Strengthening or repairing an existing structure shall consist of modifications to meet design requirements specified by the Engineer. The Engineer shall prepare a comprehensive plan for such work. When welding is used in strengthening or repairing existing aluminum structures, all provisions of this code shall apply. In planning the work, the Engineer should be aware that welding or other application of heat above 400°F [250°C] will permanently degrade the mechanical properties of the aluminum alloy so affected. Where the work consists of strengthening or repairing highway bridges, the work shall be in conformance with this code and the *Guide Specification for Aluminum Highway Bridges*, published by the American Association of State Highway and Transportation Officials.

## 7.2 Base Metal

**7.2.1** Before preparing drawings and specifications for strengthening or repairing existing structures, the types of base metal used in the original structure shall be determined either from existing drawings, specifications, or from representative base metal tests. Further, the Engineer shall investigate the effect aging may have on the physical properties of the original base metal.

**7.2.2** The suitability of the base metal for welding shall be established. Where base metals other than those in Table 4.1 are to be joined, special consideration shall be given on the selection of filler metal and WPSs.

## 7.3 Design

**7.3.1** The design process shall consider governing provisions of the *Aluminum Design Manual Specification for Aluminum Structures*, published by the Aluminum Association and other associated structural design codes.

**7.3.2** The Engineer shall specify the type and extent of survey necessary to identify existing conditions that require strengthening or repair in order to satisfy applicable criteria. An analysis of stresses in the area affected by the strengthening or repair shall be made. Stress levels shall be established for all dead- and live-load cases. Consideration shall be made for accumulated damage that members may have sustained in past service.

**7.3.3** Consideration shall be given to the effect of fatigue when strengthening or repairing members. Members subject to cyclic loading shall be designed according to the fatigue provisions of the applicable structural design code under which the plans for the work were prepared. The previous loading history shall be considered in the design. When the loading history is not available, it shall be estimated.

**7.3.4** Determination shall be made whether the repairs should consist of restoring damaged parts or of replacing entire members.

**7.3.5** The Engineer shall determine the extent to which a member will be allowed to carry loads during repair. Stability of the members shall be maintained and, when necessary, the loads shall be reduced.

**7.3.6** Existing connections in structures requiring strengthening or repair shall be evaluated for design adequacy, and reinforced as necessary.

## 7.4 Repair Procedure

The development and execution of the repair procedures shall be under the direction of the Engineer.

## 7.5 Inspection

All members and welds affected by the work shall be visually inspected. The method and extent of NDT, other than visual, shall be specified in the contract documents.



Copyright American Welding Society
Provided by IHS under license with AWS
No reproduction or networking permitted without license from IHS

Licensee=University of Texas Revised Sub Account/5620001114
Not for Resale, 08/29/2012 23:44:22 MDT

This page is intentionally blank.



Copyright American Welding Society
Provided by IHS under license with AWS
No reproduction or networking permitted without license from IHS
Licensee=University of Texas Revised Sub Account/5620001114
Not for Resale, 08/29/2012 23:44:22 MDT

# Annex A (Informative)

# Reference Documents

This annex is not part of AWS D1.2/D1.2M:2008, *Structural Welding Code—Aluminum,* but is included for informational purposes only.

**Aluminum Association Inc.**

1. *Aluminum Design Manual: Specification and Guidelines for Aluminum Structures*

**American Association of State Highway and Transportation Officials**

1. *Standard Specifications for Structural Supports for Highway Signs, Luminaries and Traffic Signals*
2. *Guide Specifications for Aluminum Highway Bridges*, 1991.
3. *AASHTO LRFD Bridge Design Specifications*, 1994.

**American Society of Mechanical Engineers**

1. *Boiler and Pressure Vessel Code—Section V, Nondestructive Examination*
2. ASME B46.1, *Surface Texture*

**American Society for Nondestructive Testing**

1. Recommended Practice No. SNT-TC-1A (*Personnel Qualification and Certification in Nondestructive Testing*)

**American Society for Testing and Materials**

1. ASTM B 26, *Standard Specification for Aluminum-Alloy Sand Castings*
2. ASTM B 108, *Standard Specification for Aluminum Alloy-Permanent Mold Castings*
3. ASTM B 209, *Standard Specification for Aluminum and Aluminum-Alloy Sheet and Plate*
4. ASTM B 210, *Standard Specification for Aluminum and Aluminum-Alloy Drawn Seamless Tubes*
5. ASTM B 211, *Standard Specification for Aluminum and Aluminum-Alloy Bar, Rod and Wire*
6. ASTM B 221, *Standard Specification for Aluminum and Aluminum-Alloy Extruded Bars, Rods, Wire, Profiles, and Tubes*
7. ASTM B 241, *Standard Specification for Aluminum and Aluminum-Alloy Seamless Pipe and Seamless Extruded Tube*
8. ASTM B 247, *Standard Specification for Aluminum and Aluminum-Alloy Die Forgings, Hand Forgings, and Rolled Ring Forgings*
9. ASTM B 308, *Standard Specification for Aluminum Alloy 6061-T6 Standard Structural Profiles*
10. ASTM B 313, *Standard Specification for Aluminum and Aluminum-Alloy Round Welded Tubes*
11. ASTM B 361, *Standard Specification for Factory-Made Wrought Aluminum and Aluminum Alloy Welding Fittings*
12. ASTM B 429, *Standard Specification for Aluminum-Alloy Extruded Structural Pipe and Tube*
13. ASTM B 483, *Standard Specification for Aluminum and Aluminum-Alloy Drawn Tubes for General Purpose Applications*
14. ASTM B 557, *Standard Methods of Tension Testing Wrought and Cast Aluminum- and Magnesium-Alloy Products*
15. ASTM B 618, *Standard Specification for Aluminum-Alloy Investment Castings*



Copyright American Welding Society
Provided by IHS under license with AWS
No reproduction or networking permitted without license from IHS

Licensee=University of Texas Revised Sub Account/5620001114
Not for Resale, 08/29/2012 23:44:22 MDT

16. ASTM B 686, *Standard Specification for Aluminum-Alloy Castings, High Strength*

17. ASTM E 94, *Standard Recommended Practice for Radiographic Testing*

18. ASTM E 142, *Standard Method for Controlling Quality of Radiographic Testing*

19. ASTM E 165, *Recommended Practice for Liquid Penetrant Inspection Method*

**American Welding Society**

1. ANSI Z49.1, *Safety in Welding, Cutting, and Allied Processes*

2. AWS A2.4, *Standard Symbols for Welding, Brazing, and Nondestructive Examination*

3. AWS A3.0, *Standard Welding Terms and Definitions, Including Terms for Adhesive Bonding, Brazing, Soldering, Thermal Cutting, and Thermal Spraying*

4. AWS B4.0, *Standard Method for Mechanical Testing of Welds*

5. AWS A5.10/A5.10M, *Specification for Bare Aluminum and Aluminum Alloy Welding Electrodes and Rods*

6. AWS A5.12/A5.12M, *Specification for Tungsten and Tungsten Alloy Electrodes for Arc Welding and Cutting*

7. AWS QC1, *Standard for AWS Certification of Welding Inspectors*

**Compressed Gas Association**

1. CGA-C11.1, *Commodity Specification for Argon*



Copyright American Welding Society
Provided by IHS under license with AWS
No reproduction or networking permitted without license from IHS
Licensee=University of Texas Revised Sub Account/5620001114
Not for Resale, 08/29/2012 23:44:22 MDT

# Annex B (Informative)

# Recommended Groove Welded Joints

This annex is not part of AWS D1.2/D1.2M:2008, *Structural Welding Code—Aluminum,* but is included for informational purposes only.

## B1. Recommended CJP Groove Welded Joints (see Figure B.1)

## B2. Recommended PJP Groove Welded Joints (see Figure B.2)

## B3. PJP Box Connections (see Figure B.3)

## B4. PJP—Circular—Tubular Joints for T-, Y-, and K-Connections Made by GTAW and GMAW (see Figure B.4)

## Legend for Annex B Figures

**Symbols for Joint Types**

B—butt joint
C—corner joint
T—T-joint
BC—butt or corner joint
TC—T- or corner joint
BTC—butt, T-, or corner joint

**Symbols for Base-Metal Thickness and Penetration**

L—limited thickness—CJP
U—unlimited thickness—CJP
P—PJP

The lower case letters, e.g., a, b, c, etc., are used to differentiate geometry and fit-up characteristics.

**Symbols for Weld Types**

1—square-groove
2—single-V-groove
3—double-V-groove
4—single-bevel-groove
5—double-bevel-groove
6—single-U-groove
7—double-U-groove
8—single-J-groove
9—double-J-groove

**Symbols for Backing**

MB—Permanent Metal
TB —Temporary



Copyright American Welding Society
Provided by IHS under license with AWS
No reproduction or networking permitted without license from IHS
Licensee=University of Texas Revised Sub Account/5620001114
Not for Resale, 08/29/2012 23:44:22 MDT

**See Notes on Page 140**

Square-groove weld (1)
Butt joint (B)
Corner joint (C)

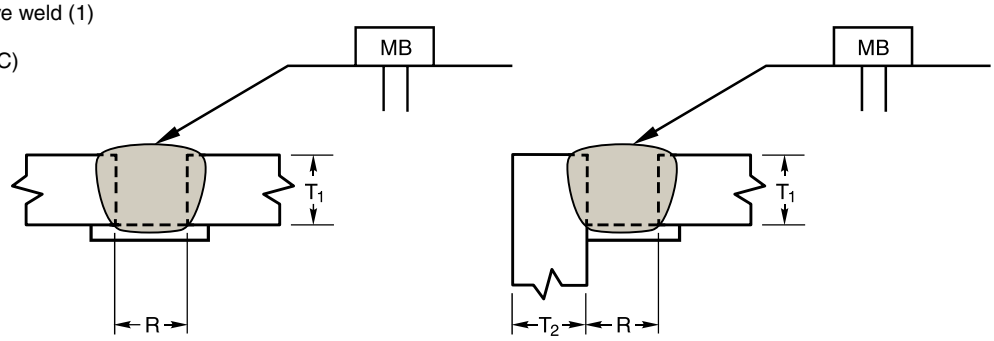


| Welding Process | Joint Designation | Base Metal Thickness (U = unlimited) | | Groove Preparation | | Welding Positions |
|---|---|---|---|---|---|---|
| | | $T_1$ | $T_2$ | Root Opening (R) | Fit-Up Tolerances | |
| GMAW | B-L1a | 3/16 max. | — | $T_1$ | +1/4, –1/16 | F, V |
| | C-L1a | 3/16 max. | U | $T_1$ | +1/4, –1/16 | F, V |
| GMAW | B-L1b | 1/4 max. | — | 3/8 | +1/4, –1/16 | OH |
| | C-L1b | 1/4 max. | U | 3/8 | +1/4, –1/16 | OH |
| GTAW | B-L1a | 1/8 max. | — | $T_1$ | +1/4, –1/16 | All |
| | C-L1a | 1/8 max. | 1/2 | $T_1$ | +1/4, –1/16 | All |

Square-groove weld (1)
Butt joint (B)

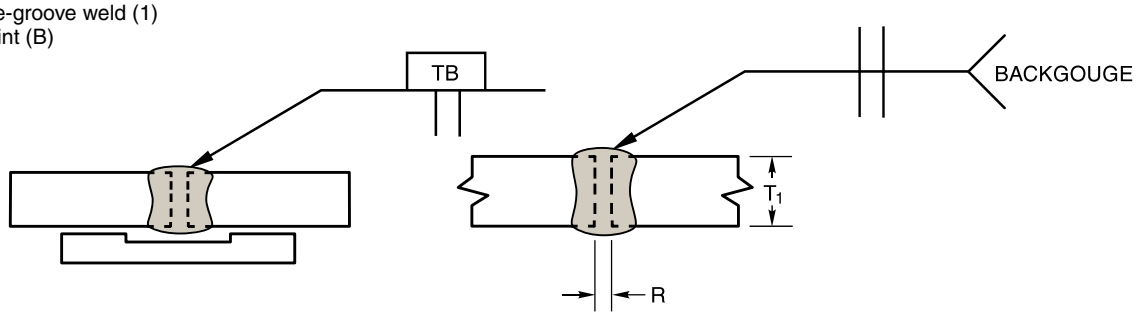


| Welding Process | Joint Designation | Base Metal Thickness | Groove Preparation | | Welding Positions | Notes |
|---|---|---|---|---|---|---|
| | | $T_1$ | Root Opening (R) | Fit-Up Tolerances | | |
| GMAW | B-L1 | 3/8 max. | 0 to 1/16 | ±1/16 | F, V | a |
| GTAW | B-L1 | 1/4 max. | 0 to 1/8 | ±1/16 | All | a |

**Figure B.1—Recommended CJP Groove Welded Joints (Inches)**



Copyright American Welding Society
Provided by IHS under license with AWS
No reproduction or networking permitted without license from IHS
Licensee=University of Texas Revised Sub Account/5620001114
Not for Resale, 08/29/2012 23:44:22 MDT

**See Notes on Page 140**

Square-groove weld (1)
T-joint (T)
Corner joint (C)

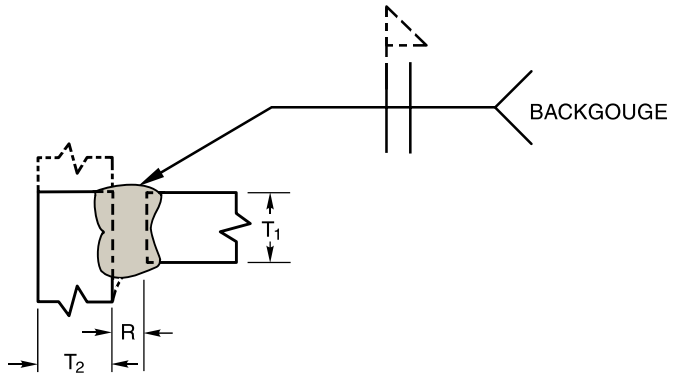


| Welding Process | Joint Designation | Base Metal Thickness | | Groove Preparation | | Welding Positions | Notes |
|---|---|---|---|---|---|---|---|
| | | $T_1$ | $T_2$ | Root Opening (R) | Fit-Up Tolerances | | |
| GMAW | TC-L1c | 3/8 max. | ≤1/4 | 0 to 1/16 | ±1/16 | F, V | a, b |
| | | | >1/4 to 3/8 | 1/16 to 3/32 | | | |
| GTAW | TC-L1c | 1/4 max. | ≥1/2 | 0 to 1/8 | ±1/16 | All | a, b |

Single-V-groove weld (2)
Butt joint (B)

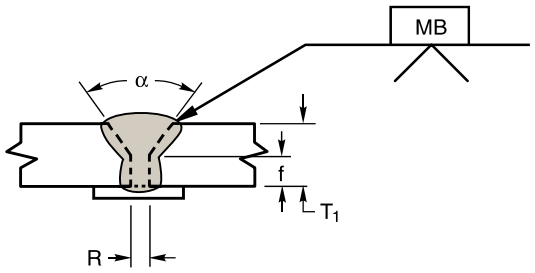


| | Fit-Up Tolerances |
|---|---|
| R | +1/4, –1/16 |
| f | ±1/16 |
| α | +10°, –5° |

| Welding Process | Joint Designation | Base Metal Thickness (U = unlimited) | Groove Preparation | | | Welding Positions | Notes |
|---|---|---|---|---|---|---|---|
| | | $T_1$ | Root Opening (R) | Root Face (f) | Groove Angle (α) | | |
| GMAW | B-U2a | U | 3/8 | 1/32 to 1/8 | 60° | All | c |
| GTAW | B-L2a | 1/2 max. | 3/8 | 1/32 to 1/8 | 60° | All | — |

**Figure B.1 (Continued)—Recommended CJP Groove Welded Joints (Inches)**



Copyright American Welding Society
Provided by IHS under license with AWS
No reproduction or networking permitted without license from IHS
Licensee=University of Texas Revised Sub Account/5620001114
Not for Resale, 08/29/2012 23:44:22 MDT

**See Notes on Page 140**

Single-V-groove weld (2)
Corner joint (C)

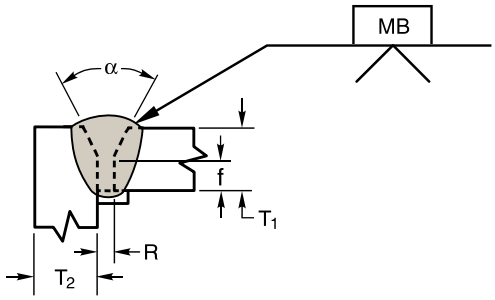


| | Fit-Up Tolerances |
|---|---|
| R | +1/4, –1/16 |
| f | ±1/16 |
| α | +10°, –5° |

| Welding Process | Joint Designation | Base Metal Thickness (U = unlimited) | | Groove Preparation | | | Welding Positions | Notes |
|---|---|---|---|---|---|---|---|---|
| | | $T_1$ | $T_2$ | Root Opening (R) | Root Face (f) | Groove Angle (α) | | |
| GMAW | C-U2a | U | U | 1/4 | 1/16 | 70° | All | c |
| | | | | 3/8 | 1/16 | 60° | F, OH | |
| GTAW | C-L2a | 1/2 max. | 1/2 max. | 1/4 | 1/16 | 70° | All | — |
| | | | | 3/8 | 1/16 | 60° | All | |

Single-V-groove weld (2)
Butt joint (B)

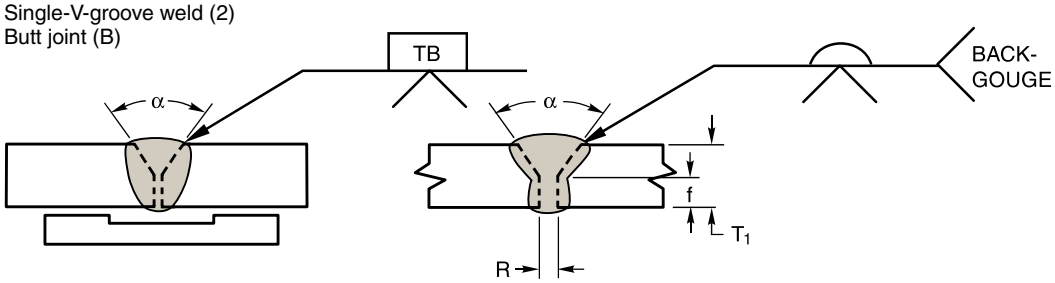


| | Fit-Up Tolerances |
|---|---|
| R | ±1/16 |
| f | ±1/16 |
| α | +10°, –5° |

| Welding Process | Joint Designation | Base Metal Thickness (U = unlimited) | Groove Preparation | | | Welding Positions | Notes |
|---|---|---|---|---|---|---|---|
| | | $T_1$ | Root Opening (R) | Root Face (f) | Groove Angle (α) | | |
| GMAW | B-U2b | ≤1 | 0 to 1/8 | 1/16 to 1/8 | 60° | All | a, c |
| | | >1 | 0 to 1/8 | 1/8 $T_1$ | 60° | | |
| GTAW | B-L2b | 1/2 max. | 0 to 1/8 | 1/16 to 1/8 | 60° | All | a |

**Figure B.1 (Continued)—Recommended CJP Groove Welded Joints (Inches)**



Copyright American Welding Society
Provided by IHS under license with AWS
No reproduction or networking permitted without license from IHS
Licensee=University of Texas Revised Sub Account/5620001114
Not for Resale, 08/29/2012 23:44:22 MDT

**See Notes on Page 140**

Single-V-groove weld (2)
Corner joint (C)

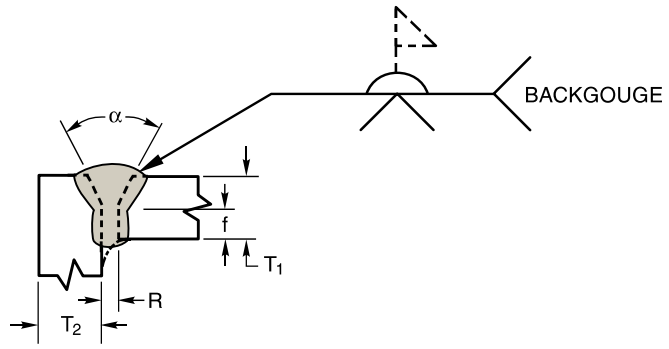


| | Fit-Up Tolerances |
|---|---|
| R | ±1/16 |
| f | ±1/16 |
| α | +10°, –5° |

| Welding Process | Joint Designation | Base Metal Thickness (U = unlimited) | | Groove Preparation | | | Welding Positions | Notes |
|---|---|---|---|---|---|---|---|---|
| | | $T_1$ | $T_2$ | Root Opening (R) | Root Face (f) | Groove Angle (α) | | |
| GMAW | C-U2 | ≤1 | U | 0 to 1/8 | 1/16 to 1/8 | 60° | All | a, b, c |
| | | >1 | U | 0 to 1/8 | 1/8 $T_1$ | 60° | | |
| GTAW | C-L2 | 1/2 max. | 1/2 max. | 0 to 1/8 | 1/16 to 1/8 | 60° | All | a, b |

Single-V-groove weld (2)
Butt joint (B)

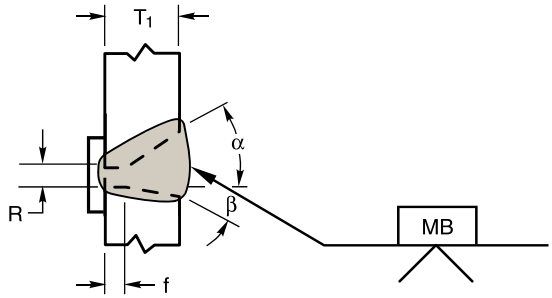


| | Fit-Up Tolerances |
|---|---|
| R | +1/4, –1/16 |
| f | ±1/16 |
| α + β | +10°, –5° |

| Welding Process | Joint Designation | Base Metal Thickness (U = unlimited) | Groove Preparation | | | Welding Positions | Notes |
|---|---|---|---|---|---|---|---|
| | | $T_1$ | Root Opening (R) | Root Face (f) | Groove Angle (α & β) | | |
| GMAW | B-U2c | U | 3/8 | 0 to 1/16 | α = 45°<br>β = 15° | H | — |

**Figure B.1 (Continued)—Recommended CJP Groove Welded Joints (Inches)**



Copyright American Welding Society
Provided by IHS under license with AWS
No reproduction or networking permitted without license from IHS
Licensee=University of Texas Revised Sub Account/5620001114
Not for Resale, 08/29/2012 23:44:22 MDT

**See Notes on Page 140**

Double-V-groove weld (3)
Butt joint (B)

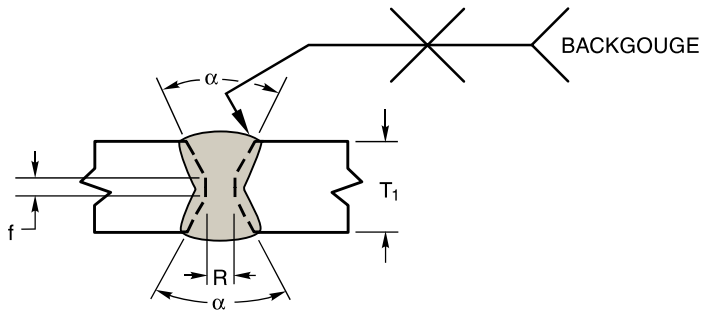


| | Fit-Up Tolerances |
|---|---|
| R | ±1/16 |
| f | ±1/16 |
| α | +10°, –5° |

| Welding Process | Joint Designation | Base Metal Thickness (U = unlimited) | Groove Preparation | | | Welding Positions | Notes |
|---|---|---|---|---|---|---|---|
| | | $T_1$ | Root Opening (R) | Root Face (f) | Groove Angle (α) | | |
| GMAW | B-U3a | U, preferably 5/8 or thicker | 0 to 1/16 | 1/16 to 1/8 | 60° | All | a, b, d, g |

Single-V-groove weld (2)
Butt joint (B)

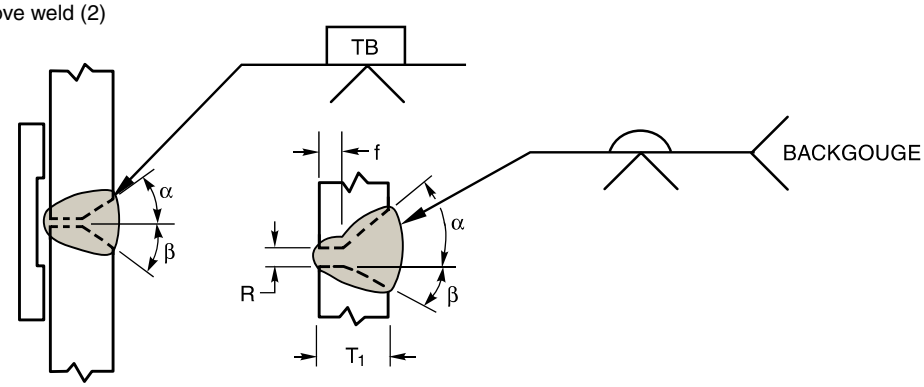


| | Fit-Up Tolerances |
|---|---|
| R | ±1/16 |
| f | ±1/16 |
| α + β | +10°, –5° |

| Welding Process | Joint Designation | Base Metal Thickness (U = unlimited) | Groove Preparation | | | Welding Positions | Notes |
|---|---|---|---|---|---|---|---|
| | | $T_1$ | Root Opening (R) | Root Face (f) | Groove Angle (α & β) | | |
| GMAW | B-U2d | ≤1 | 0 to 1/16 | 1/16 to 1/8 | α + β = 60°<br>β = 0° to 15° | H | a, c |
| | | >1 | 0 to 3/32 | 1/8 $T_1$ | α + β = 60°<br>β = 0° to 15° | | |

**Figure B.1 (Continued)—Recommended CJP Groove Welded Joints (Inches)**



Copyright American Welding Society
Provided by IHS under license with AWS
No reproduction or networking permitted without license from IHS
Licensee=University of Texas Revised Sub Account/5620001114
Not for Resale, 08/29/2012 23:44:22 MDT

**See Notes on Page 140**

Double-V-groove weld (3)
Butt joint (B)

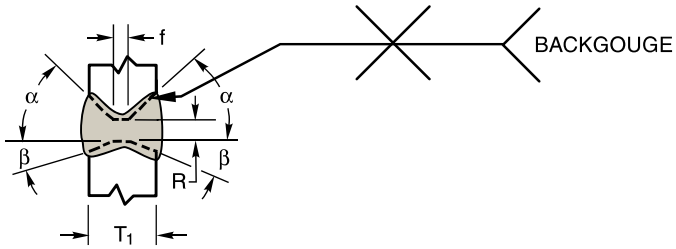


| | Fit-Up Tolerances |
|---|---|
| R | ±1/16 |
| f | ±1/16 |
| α | +10°, –5° |

| Welding Process | Joint Designation | Base Metal Thickness (U = unlimited) | Groove Preparation | | | Welding Positions | Notes |
|---|---|---|---|---|---|---|---|
| | | $T_1$ | Root Opening (R) | Root Face (f) | Groove Angle (α & β) | | |
| GMAW | B-U3b | U, preferably 5/8 or thicker | 0 to 1/8 | 1/16 to 1/8 | α + β = 60°<br>β = 0° to 15° | H | a, d, h |

Single-bevel-groove weld (4)
T-joint (T)
Corner joint (C)

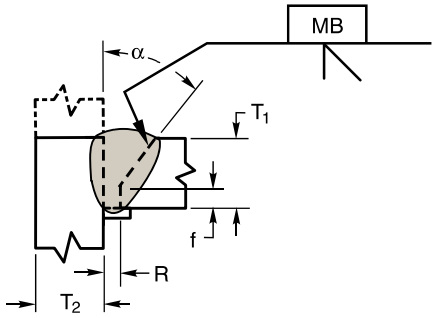


| | Fit-Up Tolerances |
|---|---|
| R | +1/4, –1/16 |
| f | ±1/16 |
| α | +10°, –5° |

| Welding Process | Joint Designation | Base Metal Thickness (U = unlimited) | | Groove Preparation | | | Welding Positions | Notes |
|---|---|---|---|---|---|---|---|---|
| | | $T_1$ | $T_2$ | Root Opening (R) | Root Face (f) | Groove Angle (α) | | |
| GMAW | TC-U4a | U | U | 3/8 | 0 to 1/16 | 60° | All | b, e, f |
| GTAW | TC-L4a | 1/2 max. | 1/2 max. | 3/8 | 0 to 1/16 | 60° | All | b, e, f |

**Figure B.1 (Continued)—Recommended CJP Groove Welded Joints (Inches)**



Copyright American Welding Society
Provided by IHS under license with AWS
No reproduction or networking permitted without license from IHS
Licensee=University of Texas Revised Sub Account/5620001114
Not for Resale, 08/29/2012 23:44:22 MDT

**See Notes on Page 140**

Single-bevel-groove weld (4)
T-joint (T)
Corner joint (C)

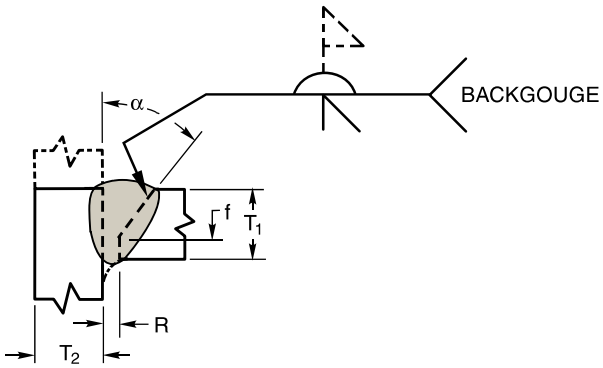


| | Fit-Up Tolerances |
|---|---|
| R | ±1/16 |
| f | ±1/16 |
| α | +10°, –5° |

| Welding Process | Joint Designation | Base Metal Thickness (U = unlimited) | | Groove Preparation | | | Welding Positions | Notes |
|---|---|---|---|---|---|---|---|---|
| | | $T_1$ | $T_2$ | Root Opening (R) | Root Face (f) | Groove Angle (α) | | |
| GMAW | TC-U4b | U | U | 0 to 3/32 | 1/16 to 1/8 | 60° | All | a, b, e, f |
| GTAW | TC-L4b | 1/2 max. | 1/2 max. | 0 to 3/32 | 1/16 to 1/8 | 60° | All | a, b, e, f |

Single-bevel-groove weld (4)
T-joint (T)
Corner joint (C)

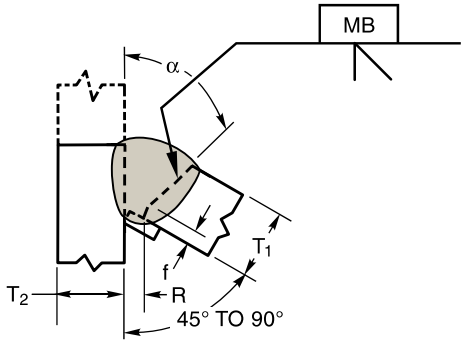


| | Fit-Up Tolerances |
|---|---|
| R | +1/4, –1/16 |
| f | ±1/16 |
| α | +10°, –5° |

| Welding Process | Joint Designation | Base Metal Thickness (U = unlimited) | | Groove Preparation | | | Welding Positions | Notes |
|---|---|---|---|---|---|---|---|---|
| | | $T_1$ | $T_2$ | Root Opening (R) | Root Face (f) | Groove Angle (α) | | |
| GMAW | TC-U4c | U | U | 3/8 | 1/16 | 60° | All | b, e |
| GTAW | TC-L4c | 1/2 max. | 1/2 max. | 3/32 | 1/16 | 60° | All | b, e |

**Figure B.1 (Continued)—Recommended CJP Groove Welded Joints (Inches)**



Copyright American Welding Society
Provided by IHS under license with AWS
No reproduction or networking permitted without license from IHS
Licensee=University of Texas Revised Sub Account/5620001114
Not for Resale, 08/29/2012 23:44:22 MDT

**See Notes on Page 140**

Double-bevel-groove weld (5)
Butt joint (B)
T-joint (T)
Corner joint (C)

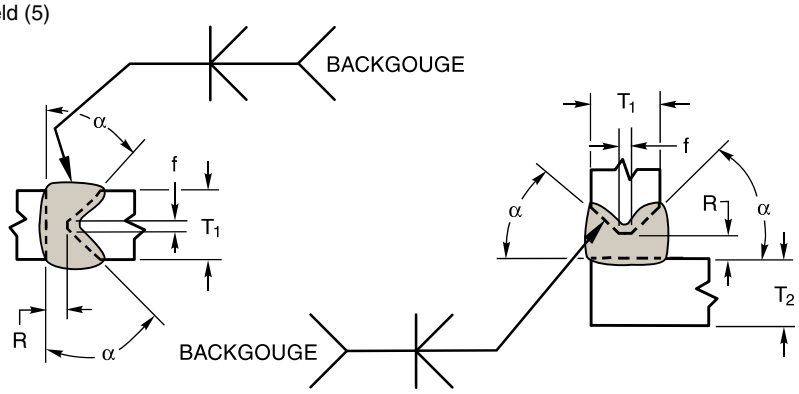


| | Fit-Up Tolerances |
|---|---|
| R | ±1/16 |
| f | ±1/16 |
| α | +10°, –5° |

| Welding Process | Joint Designation | Base Metal Thickness (U = unlimited) | | Groove Preparation | | | Welding Positions | Notes |
|---|---|---|---|---|---|---|---|---|
| | | $T_1$ | $T_2$ | Root Opening (R) | Root Face (f) | Groove Angle (α) | | |
| GMAW | B-U5a | U, preferably 5/8 or thicker | — | 0 to 1/16 | 1/16 to 1/8 | 60° | All | a, d |
| | TC-U5a | U, preferably 5/8 or thicker | U | 0 to 1/16 | 1/16 to 1/8 | 60° | All | a, b, d, e |

Single-U-groove weld (6)
Butt joint (B)
Corner joint (C)

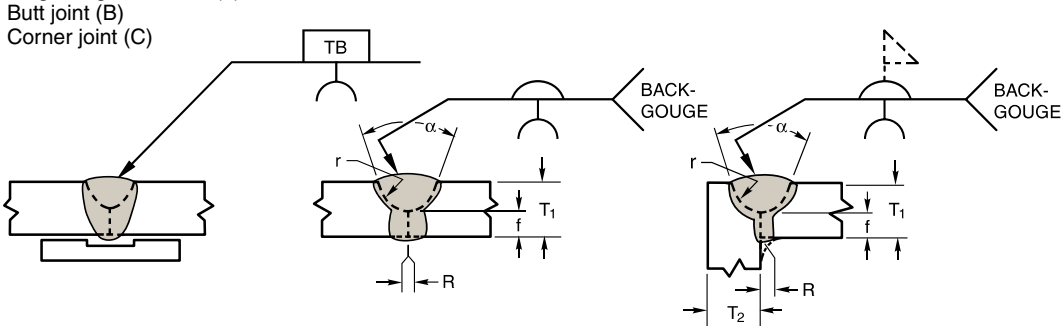


| | Fit-Up Tolerances |
|---|---|
| R | ±1/16 |
| f | ±1/16 |
| α | +10°, –5° |
| r | ±1/16 |

| Welding Process | Joint Designation | Base Metal Thickness (U = unlimited) | | Groove Preparation | | | | Welding Positions | Notes |
|---|---|---|---|---|---|---|---|---|---|
| | | $T_1$ | $T_2$ | Root Opening (R) | Root Face (f) | Groove Angle (α) | Groove Radius (r) | | |
| GMAW | B-U6 | U, preferably 5/8 or thicker | — | 0 to 3/32 | 1/8 to 1/4 | 60° | 1/4 | All | a |
| GTAW | C-U6 | U, preferably 5/8 or thicker | U | 0 to 3/32 | 1/8 to 1/4 | 60° | 1/4 | All | a, b |

**Figure B.1 (Continued)—Recommended CJP Groove Welded Joints (Inches)**



Copyright American Welding Society
Provided by IHS under license with AWS
No reproduction or networking permitted without license from IHS
Licensee=University of Texas Revised Sub Account/5620001114
Not for Resale, 08/29/2012 23:44:22 MDT

**See Notes on Page 140**

Double-U-groove weld (7)
Butt joint (B)

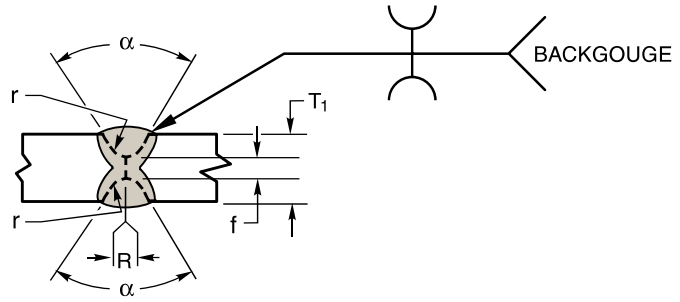


| | Fit-Up Tolerances |
|---|---|
| R | ±1/16 |
| f | ±1/16 |
| α | +10°, –5° |
| r | ±1/16 |

| Welding Process | Joint Designation | Base Metal Thickness (U = unlimited) | Groove Preparation | | | | Welding Positions | Notes |
|---|---|---|---|---|---|---|---|---|
| | | $T_1$ | Root Opening (R) | Root Face (f) | Groove Angle (α) | Groove Radius (r) | | |
| GMAW | B-U7 | U, preferably 5/8 or thicker | 0 to 3/32 | 1/8 to 1/4 | 60° | 1/4 | All | a, d |

Single-J-groove weld (8)
Butt joint (B)

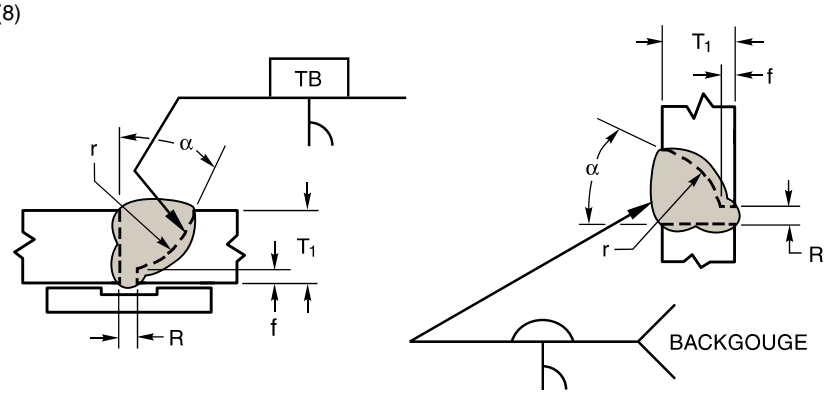


| | Fit-Up Tolerances |
|---|---|
| R | ±1/16 |
| f | ±1/16 |
| α | +10°, –5° |
| r | ±1/16 |

| Welding Process | Joint Designation | Base Metal Thickness (U = unlimited) | Groove Preparation | | | | Welding Positions | Notes |
|---|---|---|---|---|---|---|---|---|
| | | $T_1$ | Root Opening (R) | Root Face (f) | Groove Angle (α) | Groove Radius (r) | | |
| GMAW | B-U8 | U, preferably 5/8 or thicker | 0 to 3/32 | 1/8 to 1/4 | 60° | 3/8 | All | a, f |

**Figure B.1 (Continued)—Recommended CJP Groove Welded Joints (Inches)**



Copyright American Welding Society
Provided by IHS under license with AWS
No reproduction or networking permitted without license from IHS
Licensee=University of Texas Revised Sub Account/5620001114
Not for Resale, 08/29/2012 23:44:22 MDT

**See Notes on Page 140**

Double-J-groove weld (9)
Butt joint (B)

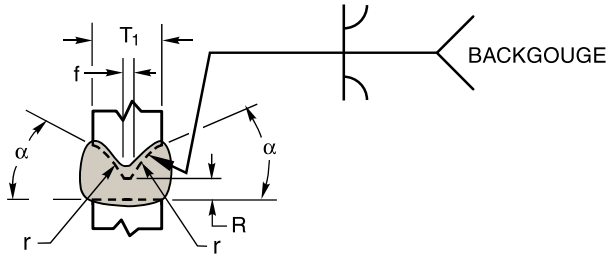


| | Fit-Up Tolerances |
|---|---|
| R | ±1/16 |
| f | ±1/16 |
| α | +10°, –5° |
| r | ±1/16 |

| Welding Process | Joint Designation | Base Metal Thickness (U = unlimited) | Groove Preparation | | | | Welding Positions | Notes |
|---|---|---|---|---|---|---|---|---|
| | | $T_1$ | Root Opening (R) | Root Face (f) | Groove Angle (α) | Groove Radius (r) | | |
| GMAW | BTC-U9 | U, preferably 5/8 or thicker | 0 to 3/32 | 1/8 | 60° | 3/8 | All | a, d, f |

**Figure B.1 (Continued)—Recommended CJP Groove Welded Joints (Inches)**



Copyright American Welding Society
Provided by IHS under license with AWS
No reproduction or networking permitted without license from IHS
Licensee=University of Texas Revised Sub Account/5620001114
Not for Resale, 08/29/2012 23:44:22 MDT

**See Notes on Page 140**

Square-groove weld (1)
Butt joint (B)
Corner joint (C)

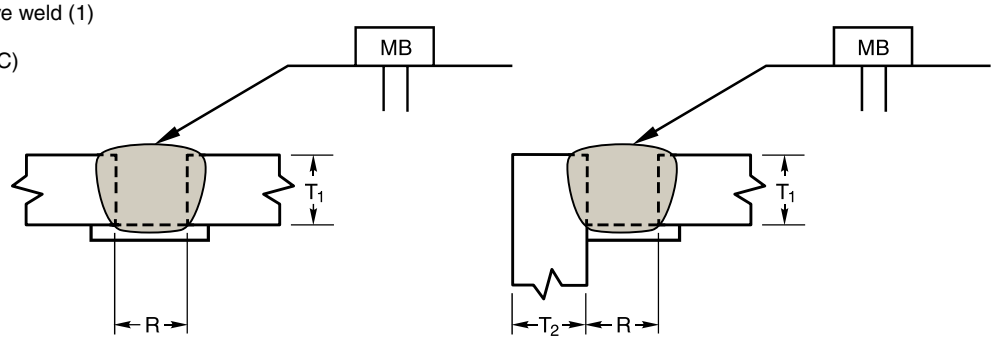


| Welding Process | Joint Designation | Base Metal Thickness (U = unlimited) | | Groove Preparation | | Welding Positions |
|---|---|---|---|---|---|---|
| | | $T_1$ | $T_2$ | Root Opening (R) | Fit-Up Tolerances | |
| GMAW | B-L1a | 5 max. | — | $T_1$ | +6, –2 | F, V |
| | C-L1a | 5 max. | U | $T_1$ | +6, –2 | F, V |
| GMAW | B-L1b | 6 max. | — | 10 | +6, –2 | OH |
| | C-L1b | 6 max. | U | 10 | +6, –2 | OH |
| GTAW | B-L1a | 3 max. | — | $T_1$ | +6, –2 | All |
| | C-L1a | 3 max. | 13 | $T_1$ | +6, –2 | All |

Square-groove weld (1)
Butt joint (B)

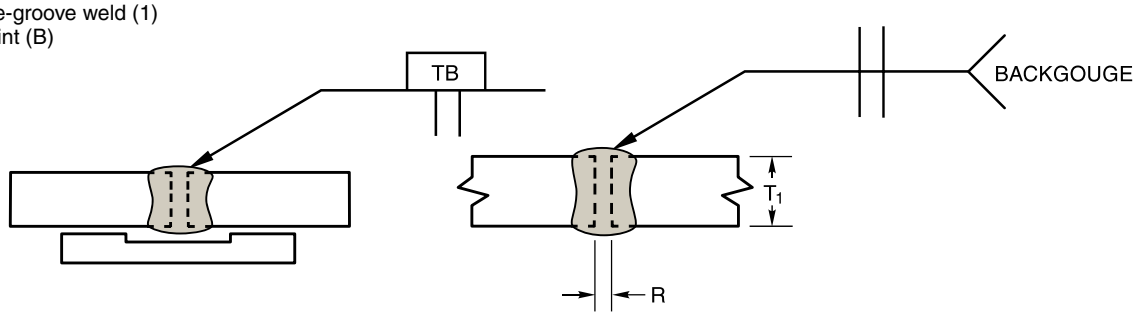


| Welding Process | Joint Designation | Base Metal Thickness | Groove Preparation | | Welding Positions | Notes |
|---|---|---|---|---|---|---|
| | | $T_1$ | Root Opening (R) | Fit-Up Tolerances | | |
| GMAW | B-L1 | 10 max. | 0 to 2 | ±2 | F, V | a |
| GTAW | B-L1 | 6 max. | 0 to 3 | ±2 | All | a |

**Figure B.1—Recommended CJP Groove Welded Joints (Millimeters)**



Copyright American Welding Society
Provided by IHS under license with AWS
No reproduction or networking permitted without license from IHS
Licensee=University of Texas Revised Sub Account/5620001114
Not for Resale, 08/29/2012 23:44:22 MDT

**See Notes on Page 140**

Square-groove weld (1)
T-joint (T)
Corner joint (C)

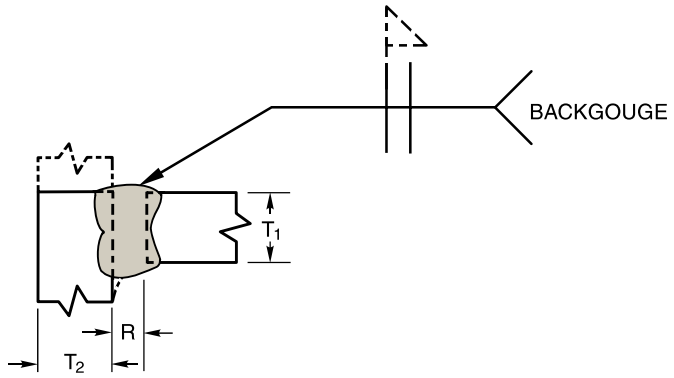


| Welding Process | Joint Designation | Base Metal Thickness | | Groove Preparation | | Welding Positions | Notes |
|---|---|---|---|---|---|---|---|
| | | $T_1$ | $T_2$ | Root Opening (R) | Fit-Up Tolerances | | |
| GMAW | TC-L1c | 10 max. | ≤6 | 0 to 2 | ±2 | F, V | a, b |
| | | | >6 to 10 | 2 | | | |
| GTAW | TC-L1c | 6 max. | ≥13 | 0 to 3 | ±2 | All | a, b |

Single-V-groove weld (2)
Butt joint (B)

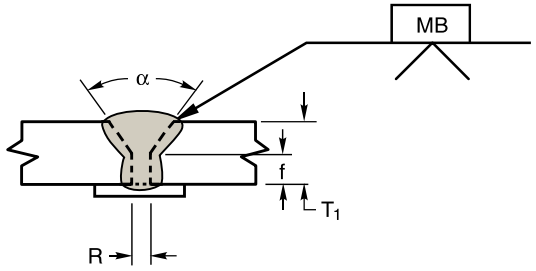


| | Fit-Up Tolerances |
|---|---|
| R | +6, –2 |
| f | ±2 |
| α | +10°, –5° |

| Welding Process | Joint Designation | Base Metal Thickness (U = unlimited) | Groove Preparation | | | Welding Positions | Notes |
|---|---|---|---|---|---|---|---|
| | | $T_1$ | Root Opening (R) | Root Face (f) | Groove Angle (α) | | |
| GMAW | B-U2a | U | 10 | 1 to 3 | 60° | All | c |
| GTAW | B-L2a | 13 max. | 10 | 1 to 3 | 60° | All | — |

**Figure B.1 (Continued)—Recommended CJP Groove Welded Joints (Millimeters)**



Copyright American Welding Society
Provided by IHS under license with AWS
No reproduction or networking permitted without license from IHS
Licensee=University of Texas Revised Sub Account/5620001114
Not for Resale, 08/29/2012 23:44:22 MDT

**See Notes on Page 140**

Single-V-groove weld (2)
Corner joint (C)

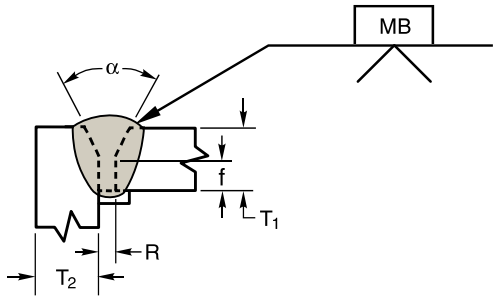


| | Fit-Up Tolerances |
|---|---|
| R | +6, –2 |
| f | ±2 |
| α | +10°, –5° |

| Welding Process | Joint Designation | Base Metal Thickness (U = unlimited) | | Groove Preparation | | | Welding Positions | Notes |
|---|---|---|---|---|---|---|---|---|
| | | $T_1$ | $T_2$ | Root Opening (R) | Root Face (f) | Groove Angle (α) | | |
| GMAW | C-U2a | U | U | 6 | 2 | 70° | All | c |
| | | | | 10 | 2 | 60° | F, OH | |
| GTAW | C-L2a | 13 max. | 13 max. | 6 | 2 | 70° | All | — |
| | | | | 10 | 2 | 60° | All | |

Single-V-groove weld (2)
Butt joint (B)

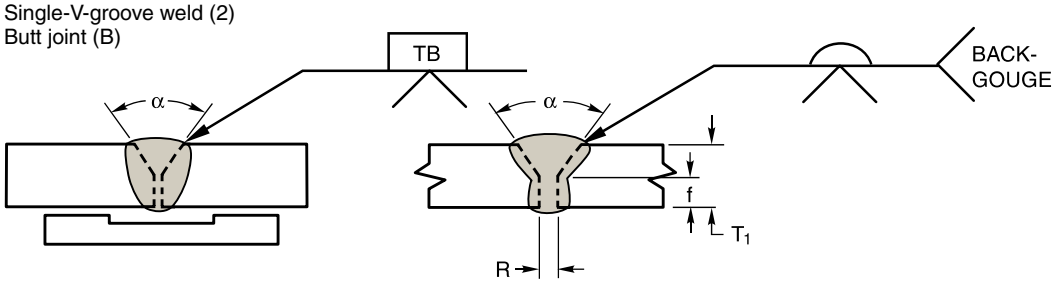


| | Fit-Up Tolerances |
|---|---|
| R | ±2 |
| f | ±2 |
| α + β | +10°, –5° |

| Welding Process | Joint Designation | Base Metal Thickness (U = unlimited) | Groove Preparation | | | Welding Positions | Notes |
|---|---|---|---|---|---|---|---|
| | | $T_1$ | Root Opening (R) | Root Face (f) | Groove Angle (α) | | |
| GMAW | B-U2b | ≤25 | 0 to 3 | 2 to 3 | 60° | All | a, c |
| | | >25 | 0 to 3 | 1/8 $T_1$ | 60° | | |
| GTAW | B-L2b | 13 max. | 0 to 3 | 2 to 3 | 60° | All | a |

**Figure B.1 (Continued)—Recommended CJP Groove Welded Joints (Millimeters)**



Copyright American Welding Society
Provided by IHS under license with AWS
No reproduction or networking permitted without license from IHS
Licensee=University of Texas Revised Sub Account/5620001114
Not for Resale, 08/29/2012 23:44:22 MDT

**See Notes on Page 140**

Single-V-groove weld (2)
Corner joint (C)

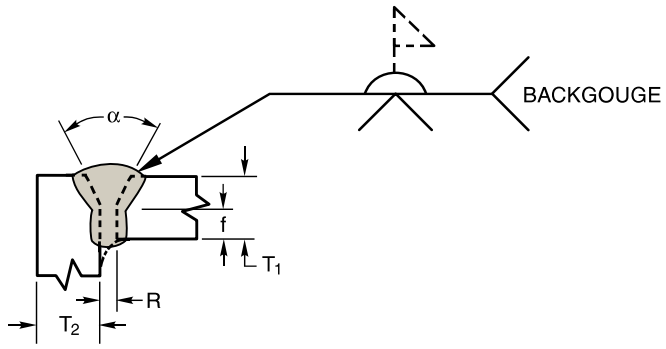


| | Fit-Up Tolerances |
|---|---|
| R | ±2 |
| f | ±2 |
| α | +10°, –5° |

| Welding Process | Joint Designation | Base Metal Thickness (U = unlimited) | | Groove Preparation | | | Welding Positions | Notes |
|---|---|---|---|---|---|---|---|---|
| | | $T_1$ | $T_2$ | Root Opening (R) | Root Face (f) | Groove Angle (α) | | |
| GMAW | C-U2 | ≤25 | U | 0 to 3 | 2 to 3 | 60° | All | a, b, c |
| | | >25 | U | 0 to 3 | 1/8 $T_1$ | 60° | | |
| GTAW | C-L2 | 13 max. | 13 max. | 0 to 3 | 2 to 3 | 60° | All | a, b |

Single-V-groove weld (2)
Butt joint (B)

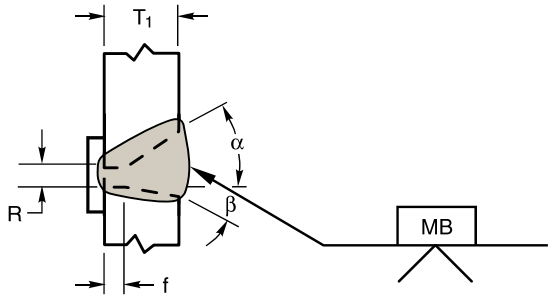


| | Fit-Up Tolerances |
|---|---|
| R | +6, –2 |
| f | ±2 |
| α + β | +10°, –5° |

| Welding Process | Joint Designation | Base Metal Thickness (U = unlimited) | Groove Preparation | | | Welding Positions | Notes |
|---|---|---|---|---|---|---|---|
| | | $T_1$ | Root Opening (R) | Root Face (f) | Groove Angle (α & β) | | |
| GMAW | B-U2c | U | 10 | 0 to 2 | α = 45°<br>β = 15° | H | — |

**Figure B.1 (Continued)—Recommended CJP Groove Welded Joints (Millimeters)**



Copyright American Welding Society
Provided by IHS under license with AWS
No reproduction or networking permitted without license from IHS
Licensee=University of Texas Revised Sub Account/5620001114
Not for Resale, 08/29/2012 23:44:22 MDT

**See Notes on Page 140**

Double-V-groove weld (3)
Butt joint (B)

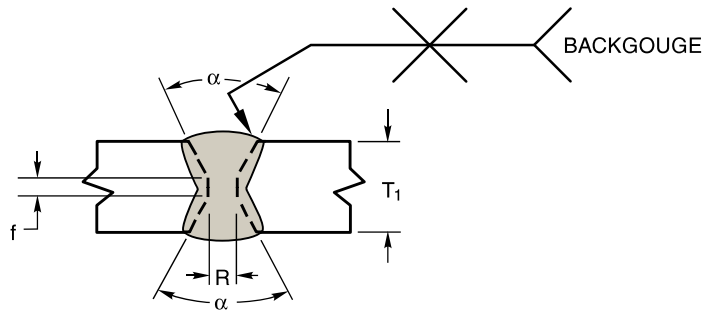


| | Fit-Up Tolerances |
|---|---|
| R | ±2 |
| f | ±2 |
| α | +10°, –5° |

| Welding Process | Joint Designation | Base Metal Thickness (U = unlimited) | Groove Preparation | | | Welding Positions | Notes |
|---|---|---|---|---|---|---|---|
| | | $T_1$ | Root Opening (R) | Root Face (f) | Groove Angle (α) | | |
| GMAW | B-U3a | U, preferably 16 or thicker | 0 to 2 | 2 to 3 | 60° | All | a, b, d, g |

Single-V-groove weld (2)
Butt joint (B)

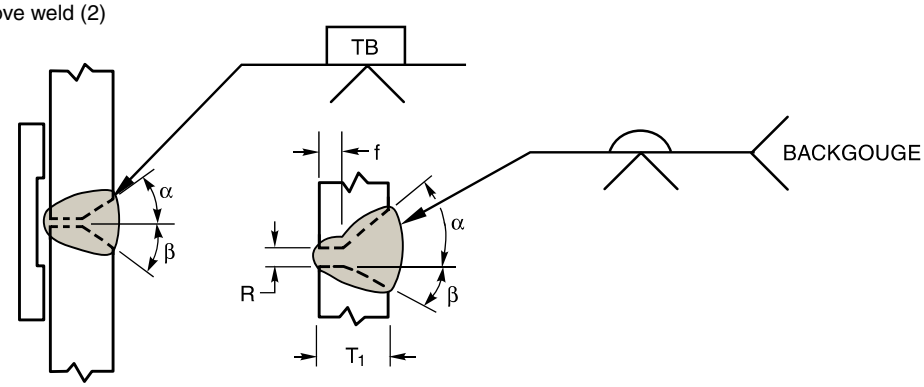


| | Fit-Up Tolerances |
|---|---|
| R | ±2 |
| f | ±2 |
| α + β | +10°, –5° |

| Welding Process | Joint Designation | Base Metal Thickness (U = unlimited) | Groove Preparation | | | Welding Positions | Notes |
|---|---|---|---|---|---|---|---|
| | | $T_1$ | Root Opening (R) | Root Face (f) | Groove Angle (α & β) | | |
| GMAW | B-U2d | ≤25 | 0 to 2 | 2 to 3 | α + β = 60°<br>β = 0° to 15° | H | a, c |
| | | >25 | 0 to 2 | 1/8 $T_1$ | α + β = 60°<br>β = 0° to 15° | | |

**Figure B.1 (Continued)—Recommended CJP Groove Welded Joints (Millimeters)**



Copyright American Welding Society
Provided by IHS under license with AWS
No reproduction or networking permitted without license from IHS
Licensee=University of Texas Revised Sub Account/5620001114
Not for Resale, 08/29/2012 23:44:22 MDT

**See Notes on Page 140**

Double-V-groove weld (3)
Butt joint (B)

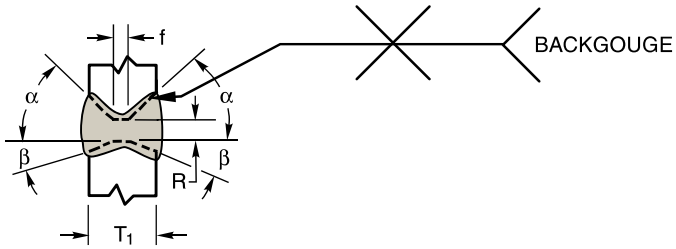


| | Fit-Up Tolerances |
|---|---|
| R | ±2 |
| f | ±2 |
| α + β | +10°, –5° |

| Welding Process | Joint Designation | Base Metal Thickness (U = unlimited) | Groove Preparation | | | Welding Positions | Notes |
|---|---|---|---|---|---|---|---|
| | | $T_1$ | Root Opening (R) | Root Face (f) | Groove Angle (α & β) | | |
| GMAW | B-U3b | U, preferably 16 or thicker | 0 to 3 | 2 to 3 | α + β = 60°<br>β = 0° to 15° | H | a, d, h |

Single-bevel-groove weld (4)
T-joint (T)
Corner joint (C)

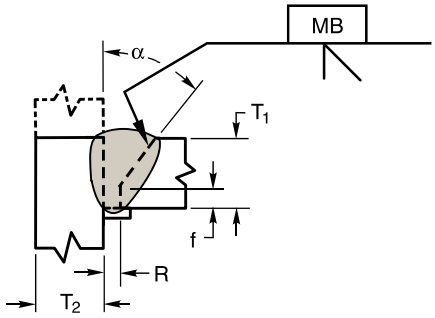


| | Fit-Up Tolerances |
|---|---|
| R | +6, –2 |
| f | ±2 |
| α | +10°, –5° |

| Welding Process | Joint Designation | Base Metal Thickness (U = unlimited) | | Groove Preparation | | | Welding Positions | Notes |
|---|---|---|---|---|---|---|---|---|
| | | $T_1$ | $T_2$ | Root Opening (R) | Root Face (f) | Groove Angle (α) | | |
| GMAW | TC-U4a | U | U | 10 | 0 to 2 | 60° | All | b, e, f |
| GTAW | TC-L4a | 13 max. | 13 max. | 10 | 0 to 2 | 60° | All | b, e, f |

**Figure B.1 (Continued)—Recommended CJP Groove Welded Joints (Millimeters)**



Copyright American Welding Society
Provided by IHS under license with AWS
No reproduction or networking permitted without license from IHS
Licensee=University of Texas Revised Sub Account/5620001114
Not for Resale, 08/29/2012 23:44:22 MDT

**See Notes on Page 140**

Single-bevel-groove weld (4)
T-joint (T)
Corner joint (C)

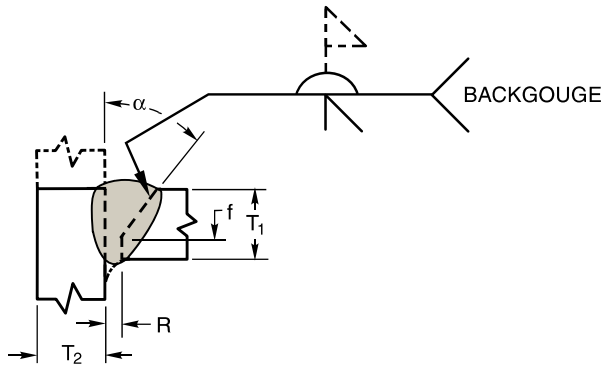


| | Fit-Up Tolerances |
|---|---|
| R | ±2 |
| f | ±2 |
| α | +10°, –5° |

| Welding Process | Joint Designation | Base Metal Thickness (U = unlimited) | | Groove Preparation | | | Welding Positions | Notes |
|---|---|---|---|---|---|---|---|---|
| | | $T_1$ | $T_2$ | Root Opening (R) | Root Face (f) | Groove Angle (α) | | |
| GMAW | TC-U4b | U | U | 0 to 2 | 2 to 3 | 60° | All | a, b, e, f |
| GTAW | TC-L4b | 13 max. | 13 max. | 0 to 2 | 2 to 3 | 60° | All | a, b, e, f |

Single-bevel-groove weld (4)
T-joint (T)
Corner joint (C)

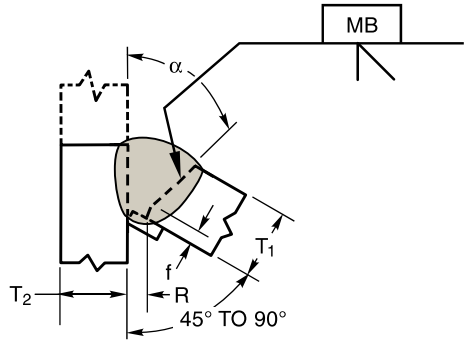


| | Fit-Up Tolerances |
|---|---|
| R | +6, –2 |
| f | ±2 |
| α | +10°, –5° |

| Welding Process | Joint Designation | Base Metal Thickness (U = unlimited) | | Groove Preparation | | | Welding Positions | Notes |
|---|---|---|---|---|---|---|---|---|
| | | $T_1$ | $T_2$ | Root Opening (R) | Root Face (f) | Groove Angle (α) | | |
| GMAW | TC-U4c | U | U | 10 | 2 | 60° | All | b, e |
| GTAW | TC-L4c | 13 max. | 13 max. | 10 | 2 | 60° | All | b, e |

**Figure B.1 (Continued)—Recommended CJP Groove Welded Joints (Millimeters)**



Copyright American Welding Society
Provided by IHS under license with AWS
No reproduction or networking permitted without license from IHS
Licensee=University of Texas Revised Sub Account/5620001114
Not for Resale, 08/29/2012 23:44:22 MDT

**See Notes on Page 140**

Double-bevel-groove weld (5)
Butt joint (B)
T-joint (T)
Corner joint (C)

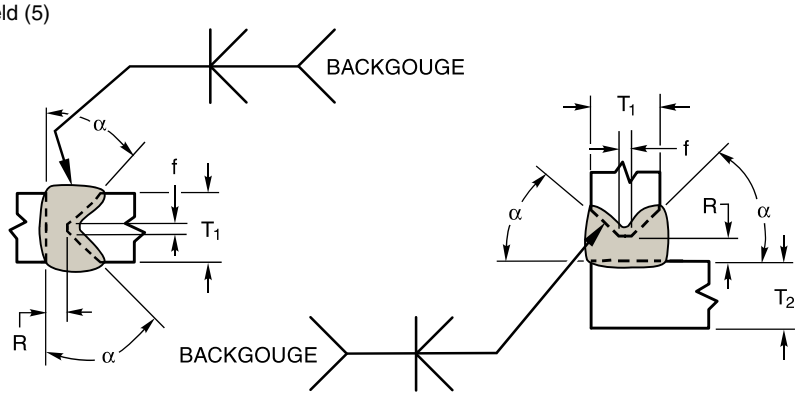


| | Fit-Up Tolerances |
|---|---|
| R | ±2 |
| f | ±2 |
| α | +10°, –5° |

| Welding Process | Joint Designation | Base Metal Thickness (U = unlimited) | | Groove Preparation | | | Welding Positions | Notes |
|---|---|---|---|---|---|---|---|---|
| | | $T_1$ | $T_2$ | Root Opening (R) | Root Face (f) | Groove Angle (α) | | |
| GMAW | B-U5a | U, preferably 16 or thicker | — | 0 to 2 | 2 to 3 | 60° | All | a, d |
| | TC-U5a | U, preferably 16 or thicker | U | 0 to 2 | 2 to 3 | 60° | All | a, b, d, e |

Single-U-groove weld (6)
Butt joint (B)
Corner joint (C)

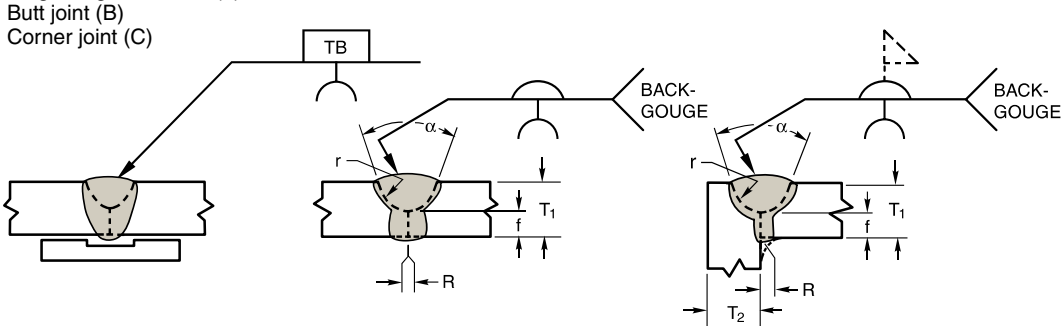


| | Fit-Up Tolerances |
|---|---|
| R | ±2 |
| f | ±2 |
| α | +10°, –5° |
| r | ±2 |

| Welding Process | Joint Designation | Base Metal Thickness (U = unlimited) | | Groove Preparation | | | | Welding Positions | Notes |
|---|---|---|---|---|---|---|---|---|---|
| | | $T_1$ | $T_2$ | Root Opening (R) | Root Face (f) | Groove Angle (α) | Groove Radius (r) | | |
| GMAW | B-U6 | U, preferably 16 or thicker | — | 0 to 2 | 3 to 6 | 60° | 6 | All | a |
| GTAW | C-U6 | U, preferably 16 or thicker | U | 0 to 2 | 3 to 6 | 60° | 6 | All | a, b |

**Figure B.1 (Continued)—Recommended CJP Groove Welded Joints (Millimeters)**



Copyright American Welding Society
Provided by IHS under license with AWS
No reproduction or networking permitted without license from IHS
Licensee=University of Texas Revised Sub Account/5620001114
Not for Resale, 08/29/2012 23:44:22 MDT

**See Notes on Page 140**

Double-U-groove weld (7)
Butt joint (B)

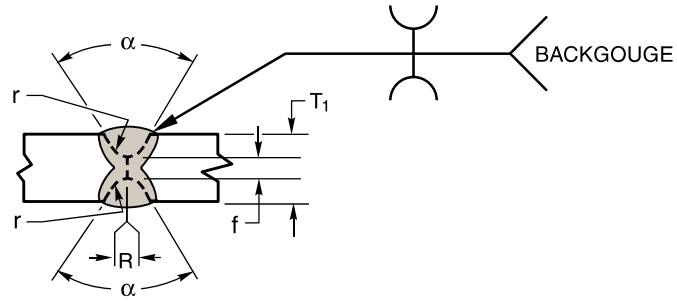


| | Fit-Up Tolerances |
|---|---|
| R | ±2 |
| f | ±2 |
| α | +10°, –5° |
| r | ±2 |

| Welding Process | Joint Designation | Base Metal Thickness (U = unlimited) $T_1$ | Groove Preparation: Root Opening (R) | Root Face (f) | Groove Angle (α) | Groove Radius (r) | Welding Positions | Notes |
|---|---|---|---|---|---|---|---|---|
| GMAW | B-U7 | U, preferably 16 or thicker | 0 to 2 | 3 to 6 | 60° | 6 | All | a, d |

Single-J-groove weld (8)
Butt joint (B)

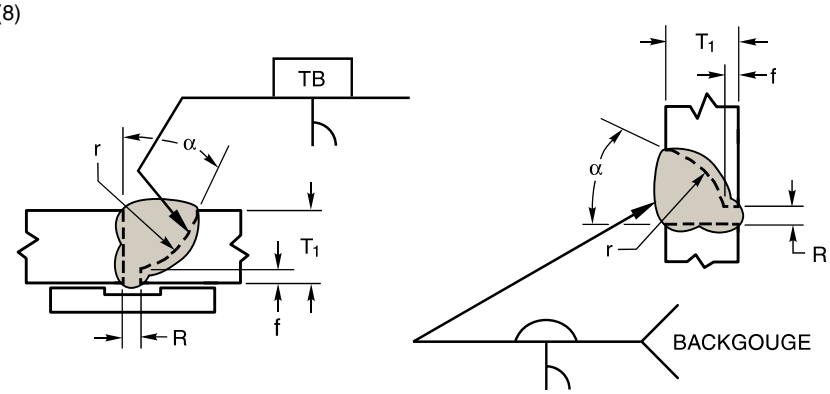


| | Fit-Up Tolerances |
|---|---|
| R | ±2 |
| f | ±2 |
| α | +10°, –5° |
| r | ±2 |

| Welding Process | Joint Designation | Base Metal Thickness (U = unlimited) $T_1$ | Groove Preparation: Root Opening (R) | Root Face (f) | Groove Angle (α) | Groove Radius (r) | Welding Positions | Notes |
|---|---|---|---|---|---|---|---|---|
| GMAW | B-U8 | U, preferably 16 or thicker | 0 to 2 | 3 to 6 | 60° | 10 | All | a, f |

**Figure B.1 (Continued)—Recommended CJP Groove Welded Joints (Millimeters)**



Copyright American Welding Society
Provided by IHS under license with AWS
No reproduction or networking permitted without license from IHS
Licensee=University of Texas Revised Sub Account/5620001114
Not for Resale, 08/29/2012 23:44:22 MDT

**See Notes on Page 140**

Double-J-groove weld (9)
Butt joint (B)

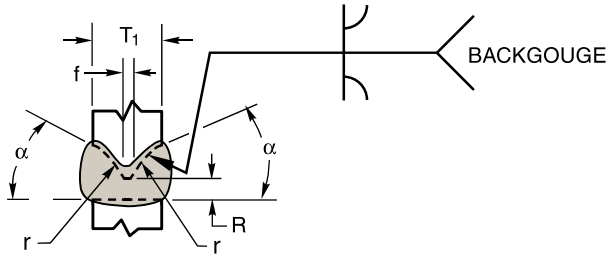


| | Fit-Up Tolerances |
|---|---|
| R | ±2 |
| f | ±2 |
| α | +10°, –5° |
| r | ±2 |

| Welding Process | Joint Designation | Base Metal Thickness (U = unlimited) | Groove Preparation | | | | Welding Positions | Notes |
|---|---|---|---|---|---|---|---|---|
| | | $T_1$ | Root Opening (R) | Root Face (f) | Groove Angle (α) | Groove Radius (r) | | |
| GMAW | BTC-U9 | U, preferably 16 or thicker | 0 to 2 | 3 | 60° | 10 | All | a, d, f |

**Figure B.1 (Continued)—Recommended CJP Groove Welded Joints (Millimeters)**



Copyright American Welding Society
Provided by IHS under license with AWS
No reproduction or networking permitted without license from IHS
Licensee=University of Texas Revised Sub Account/5620001114
Not for Resale, 08/29/2012 23:44:22 MDT

**See Notes on Page 140**

Square-groove weld (1)
Butt joint (B)
Corner joint (C)

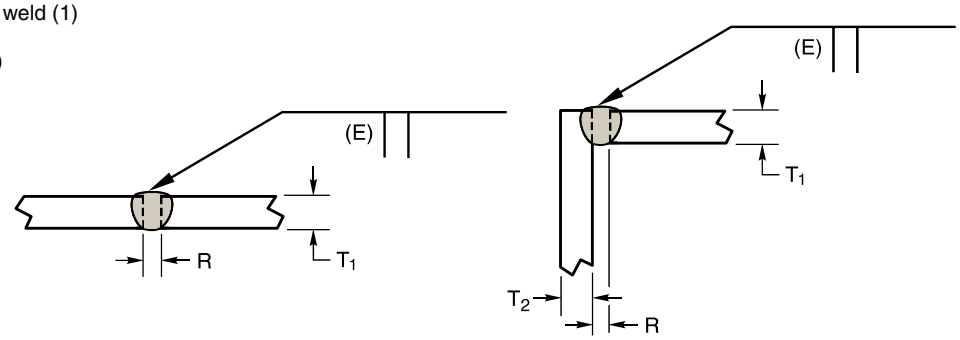


| Welding Process | Joint Designation | Base Metal Thickness (U = unlimited) | | Groove Preparation | | Suggested Welding Positions | Weld Size (E) | Notes |
|---|---|---|---|---|---|---|---|---|
| | | $T_1$ | $T_2$ | Root Opening (R) | Fit-Up Tolerances | | | |
| GMAW | B-P1a | 1/4 max. | — | 0 to 1/16 | ±1/16 | All | $\frac{3T_1}{4}$ | j, k |
| | C-P1a | 1/4 max. | U | | ±1/16 | All | | |
| GTAW | B-P1a | 1/8 | — | 0 to 1/16 | ±1/16 | All | $\frac{3T_1}{4}$ | j, k |
| | C-P1a | 1/8 | 1/2 max. | | ±1/16 | All | | |

Square-groove weld (1)
Butt joint (B)

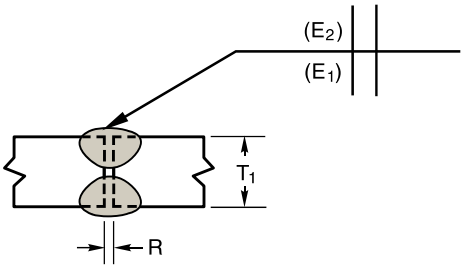


| Welding Process | Joint Designation | Base Metal Thickness | Groove Preparation | | | Suggested Welding Positions | Weld Size ($E_1 + E_2$) | Notes |
|---|---|---|---|---|---|---|---|---|
| | | | Root Opening (R) | Tolerances | | | | |
| | | | | As Detailed (see 2.10.3) | As Fit- Up (see 3.3) | | | |
| | | $T_1$ | | | | | | |
| GMAW | B-P1b | 3/8 max. | 0 to 3/32 | +1/16, –0 | ±1/16 | All | $\frac{3T_1}{4}$ | i |

**Figure B.2—Recommended PJP Groove Welded Joints (Inches)**



Copyright American Welding Society
Provided by IHS under license with AWS
No reproduction or networking permitted without license from IHS
Licensee=University of Texas Revised Sub Account/5620001114
Not for Resale, 08/29/2012 23:44:22 MDT

**See Notes on Page 140**

Single-V-groove weld (2)
Butt joint (B)
Corner joint (C)

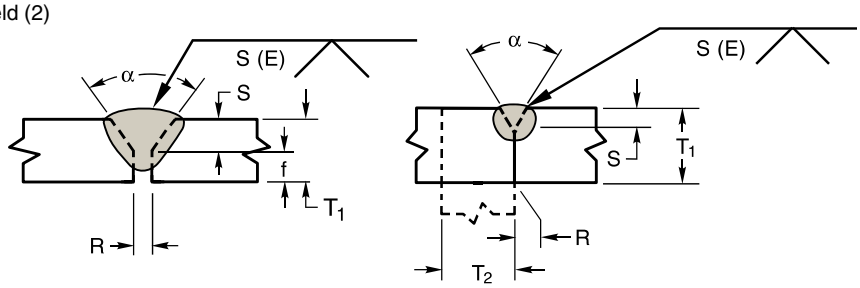


| | Fit-Up Tolerances |
|---|---|
| R | ±1/16 |
| f | ±1/16 |
| α | +10°, –5° |

| Welding Process | Joint Designation | Base Metal Thickness (U = unlimited) | | Groove Preparation | | | Suggested Welding Positions | Weld Size (E) | Notes |
|---|---|---|---|---|---|---|---|---|---|
| | | $T_1$ | $T_2$ | Root Opening (R) | Root Face (f) | Groove Angle (α) | | | |
| GMAW | BC-P2 | 1/4 min. | U | 0 to 1/16 | 1/16 min. | 60° | All | S | j, k |
| GTAW | BC-P2 | 1/8 min. 1/2 max. | 1/2 max. | 0 to 1/16 | 1/16 min. | 60° | All | S | j, k |

Double-V-groove weld (3)
Butt joint (B)

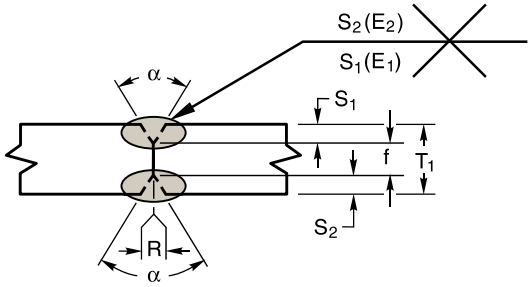


| | Fit-Up Tolerances |
|---|---|
| R | ±1/16 |
| f | ±1/16 |
| α | +10°, –5° |

| Welding Process | Joint Designation | Base Metal Thickness | Groove Preparation | | | Suggested Welding Positions | Weld Size ($E_1 + E_2$) | Notes |
|---|---|---|---|---|---|---|---|---|
| | | $T_1$ | Root Opening (R) | Root Face (f) | Groove Angle (α) | | | |
| GMAW | B-P3 | 3/8 min. | 0 to 1/16 | 1/16 min. | 60° | All | $S_1 + S_2$ | i |
| GTAW | B-P3 | 1/8 min. 1/2 max. | 0 to 1/16 | 1/16 min. | 60° | All | $S_1 + S_2$ | i |

**Figure B.2 (Continued)—Recommended PJP Groove Welded Joints (Inches)**



Copyright American Welding Society
Provided by IHS under license with AWS
No reproduction or networking permitted without license from IHS
Licensee=University of Texas Revised Sub Account/5620001114
Not for Resale, 08/29/2012 23:44:22 MDT

**See Notes on Page 140**

Single-bevel-groove weld (4)
Butt joint (B)
T-joint (T)
Corner joint (C)

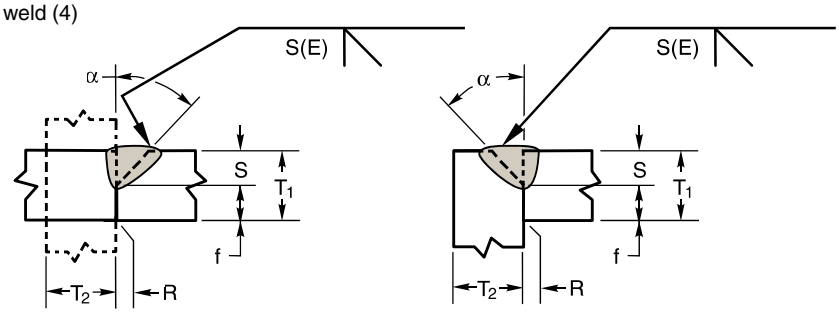


| | Fit-Up Tolerances |
|---|---|
| R | ±1/16 |
| f | ±1/16 |
| α | +10°, –5° |

| Welding Process | Joint Designation | Base Metal Thickness (U = unlimited) | | Groove Preparation | | | Suggested Welding Positions | Weld Size (E) | Notes |
|---|---|---|---|---|---|---|---|---|---|
| | | $T_1$ | $T_2$ | Root Opening (R) | Root Face (f) | Groove Angle (α) | | | |
| GMAW | BTC-P4 | 1/4 min. | U | 0 to 1/16 | 1/16 min. | 60° | F, V | S | e, j, k, l |
| | | | | | | | H, OH | S | |
| GTAW | BTC-P4 | 1/8 min. 1/2 max. | 1/2 max. | 0 to 1/16 | 1/16 min. | 60° | All | S | e, j, k, l |

Double-bevel-groove weld (5)
Butt joint (B)
T-joint (T)
Corner joint (C)

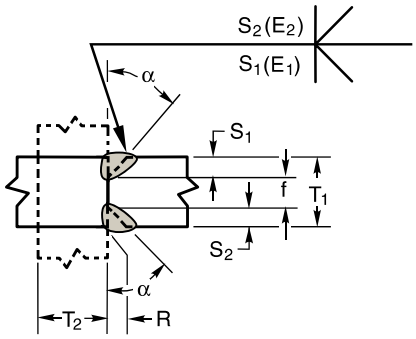


| | Fit-Up Tolerances |
|---|---|
| R | ±1/16 |
| f | ±1/16 |
| α | +10°, –5° |

| Welding Process | Joint Designation | Base Metal Thickness (U = unlimited) | | Groove Preparation | | | Suggested Welding Positions | Weld Size ($E_1 + E_2$) | Notes |
|---|---|---|---|---|---|---|---|---|---|
| | | $T_1$ | $T_2$ | Root Opening (R) | Root Face (f) | Groove Angle (α) | | | |
| GMAW | BTC-P5 | 3/8 min. | U | 0 to 1/16 | 1/16 min. | 60° | F, V | $S_1 + S_2$ | e, i, k |
| | | | | | | | H, OH | $S_1 + S_2$ | |
| GTAW | BTC-P5 | 1/8 min. 1/2 max. | 1/2 max. | 0 to 1/16 | 1/16 min. | 60° | All | $S_1 + S_2$ | e, i, k |

**Figure B.2 (Continued)—Recommended PJP Groove Welded Joints (Inches)**



Copyright American Welding Society
Provided by IHS under license with AWS
No reproduction or networking permitted without license from IHS
Licensee=University of Texas Revised Sub Account/5620001114
Not for Resale, 08/29/2012 23:44:22 MDT

**See Notes on Page 140**

Single-U-groove weld (6)
Butt joint (B)
Corner joint (C)

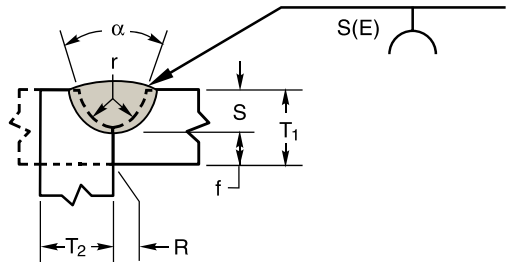


| | Fit-Up Tolerances |
|---|---|
| R | ±1/16 |
| f | ±1/16 |
| α | +10°, –5° |
| r | ±1/16 |

| Welding Process | Joint Designation | Base Metal Thickness (U = unlimited) | | Groove Preparation | | | | Suggested Welding Positions | Weld Size (E) | Notes |
|---|---|---|---|---|---|---|---|---|---|---|
| | | $T_1$ | $T_2$ | Root Opening (R) | Root Face (f) | Groove Angle (α) | Groove Radius (r) | | | |
| GMAW | BC-P6 | 1/4 min. | U | 0 to 1/16 | 1/16 min. | 60° | 1/4 | All | S | j |

Double-U-groove weld (7)
Butt joint (B)

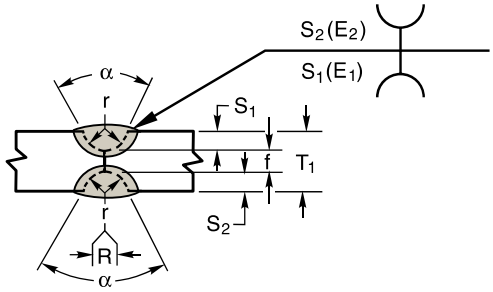


| | Fit-Up Tolerances |
|---|---|
| R | ±1/16 |
| f | ±1/16 |
| α | +10°, –5° |
| r | ±1/16 |

| Welding Process | Joint Designation | Base Metal Thickness | Groove Preparation | | | | Suggested Welding Positions | Weld Size ($E_1 + E_2$) | Notes |
|---|---|---|---|---|---|---|---|---|---|
| | | $T_1$ | Root Opening (R) | Root Face (f) | Groove Angle (α) | Groove Radius (r) | | | |
| GMAW | B-P7 | 3/8 min. | 0 to 1/16 | 1/16 min. | 60° | 1/4 | All | $S_1 + S_2$ | i |

**Figure B.2 (Continued)—Recommended PJP Groove Welded Joints (Inches)**



Copyright American Welding Society
Provided by IHS under license with AWS
No reproduction or networking permitted without license from IHS
Licensee=University of Texas Revised Sub Account/5620001114
Not for Resale, 08/29/2012 23:44:22 MDT

**See Notes on Page 140**

Single-J-groove weld (8)
Butt joint (B)
T-joint (T)
Corner joint (C)

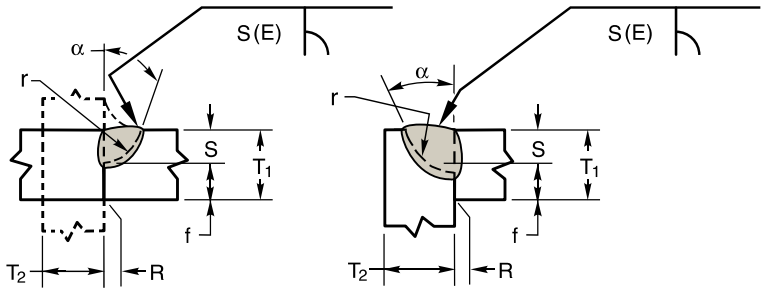


| | Fit-Up Tolerances |
|---|---|
| R | ±1/16 |
| f | ±1/16 |
| α | +10°, –5° |
| r | ±1/16 |

| Welding Process | Joint Designation | Base Metal Thickness (U = unlimited) | | Groove Preparation | | | | Suggested Welding Positions | Weld Size (E) | Notes |
|---|---|---|---|---|---|---|---|---|---|---|
| | | $T_1$ | $T_2$ | Root Opening (R) | Root Face (f) | Groove Angle (α) | Groove Radius (r) | | | |
| GMAW | BTC-P8 | 1/4 min. | U | 0 to 1/16 | 1/16 min. | 60° | 3/8 | All | S | e, j |

Double-J-groove weld (9)
Butt joint (B)
T-joint (T)
Corner joint (C)

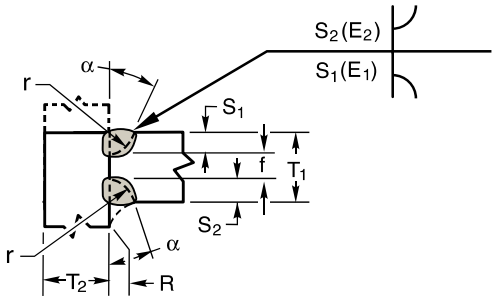


| | Fit-Up Tolerances |
|---|---|
| R | ±1/16 |
| f | ±1/16 |
| α | +10°, –5° |
| r | ±1/16 |

| Welding Process | Joint Designation | Base Metal Thickness (U = unlimited) | | Groove Preparation | | | | Suggested Welding Positions | Weld Size ($E_1 + E_2$) | Notes |
|---|---|---|---|---|---|---|---|---|---|---|
| | | $T_1$ | $T_2$ | Root Opening (R) | Root Face (f) | Groove Angle (α) | Groove Radius (r) | | | |
| GMAW | BTC-P9 | 3/8 min. | U | 0 to 1/16 | 1/16 min. | 60° | 3/8 | All | $S_1 + S_2$ | e, i, k |

**Figure B.2 (Continued)—Recommended PJP Groove Welded Joints (Inches)**



Copyright American Welding Society
Provided by IHS under license with AWS
No reproduction or networking permitted without license from IHS
Licensee=University of Texas Revised Sub Account/5620001114
Not for Resale, 08/29/2012 23:44:22 MDT

**See Notes on Page 140**

Square-groove weld (1)
Butt joint (B)
Corner joint (C)

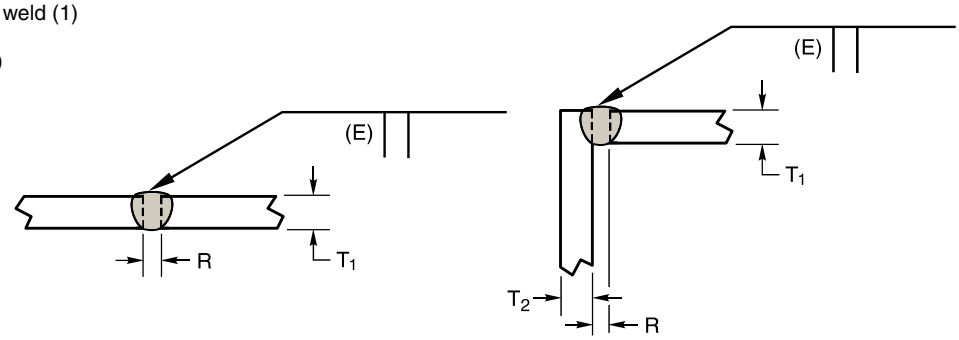


| Welding Process | Joint Designation | Base Metal Thickness (U = unlimited) | | Groove Preparation | | Suggested Welding Positions | Weld Size (E) | Notes |
|---|---|---|---|---|---|---|---|---|
| | | $T_1$ | $T_2$ | Root Opening (R) | Fit-Up Tolerances | | | |
| GMAW | B-P1a | 6 max. | — | 0 to 2 | ±2 | All | $\frac{3T_1}{4}$ | j, k |
| | C-P1a | 6 max. | U | | ±2 | All | | |
| GTAW | B-P1a | 3 | — | 0 to 2 | ±2 | All | $\frac{3T_1}{4}$ | j, k |
| | C-P1a | 3 | 13 max. | | ±2 | All | | |

Square-groove weld (1)
Butt joint (B)

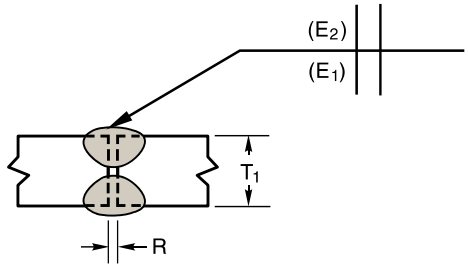


| Welding Process | Joint Designation | Base Metal Thickness | Groove Preparation | | Suggested Welding Positions | Max Weld Size ($E_1 + E_2$) | Notes |
|---|---|---|---|---|---|---|---|
| | | $T_1$ | Root Opening (R) | Fit-Up Tolerances | | | |
| GMAW | B-P1b | 10 max. | 0 to 2 | ±2 | All | $\frac{3T_1}{4}$ | i |

**Figure B.2 (Continued)—Recommended PJP Groove Welded Joints (Millimeters)**



Copyright American Welding Society
Provided by IHS under license with AWS
No reproduction or networking permitted without license from IHS
Licensee=University of Texas Revised Sub Account/5620001114
Not for Resale, 08/29/2012 23:44:22 MDT

**See Notes on Page 140**

Single-V-groove weld (2)
Butt joint (B)
Corner joint (C)

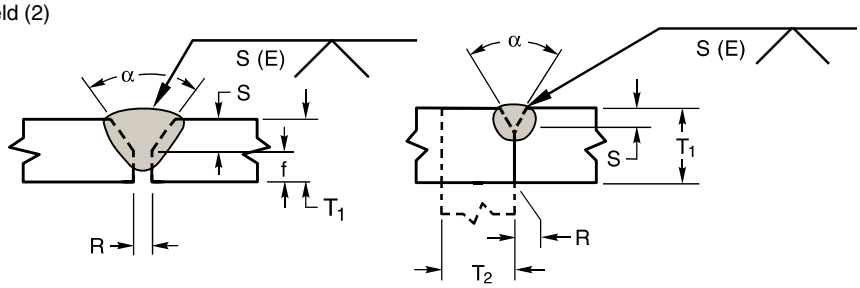


| | Fit-Up Tolerances |
|---|---|
| R | ±2 |
| f | ±2 |
| α | +10°, –5° |

| Welding Process | Joint Designation | Base Metal Thickness | | Groove Preparation | | | Suggested Welding Positions | Weld Size (E) | Notes |
|---|---|---|---|---|---|---|---|---|---|
| | | $T_1$ | $T_2$ | Root Opening (R) | Root Face (f) | Groove Angle (α) | | | |
| GMAW | BC-P2 | 6 min. | — | 0 to 2 | 2 min. | 60° | All | S | j, k |
| GTAW | BC-P2 | 3 min.<br>13 max. | 13 max. | 0 to 2 | 2 min. | 60° | All | S | j, k |

Double-V-groove weld (3)
Butt joint (B)

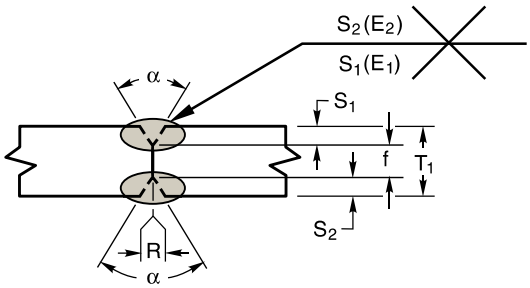


| | Fit-Up Tolerances |
|---|---|
| R | ±2 |
| f | ±2 |
| α | +10°, –5° |

| Welding Process | Joint Designation | Base Metal Thickness | Groove Preparation | | | Suggested Welding Positions | Weld Size ($E_1 + E_2$) | Notes |
|---|---|---|---|---|---|---|---|---|
| | | $T_1$ | Root Opening (R) | Root Face (f) | Groove Angle (α) | | | |
| GMAW | B-P3 | 10 min. | 0 to 2 | 2 min. | 60° | All | $S_1 + S_2$ | i |
| GTAW | B-P3 | 3 min.<br>13 max. | 0 to 2 | 2 min. | 60° | All | $S_1 + S_2$ | i |

**Figure B.2 (Continued)—Recommended PJP Groove Welded Joints (Millimeters)**



Copyright American Welding Society
Provided by IHS under license with AWS
No reproduction or networking permitted without license from IHS
Licensee=University of Texas Revised Sub Account/5620001114
Not for Resale, 08/29/2012 23:44:22 MDT

**See Notes on Page 140**

Single-bevel-groove weld (4)
Butt joint (B)
T-joint (T)
Corner joint (C)

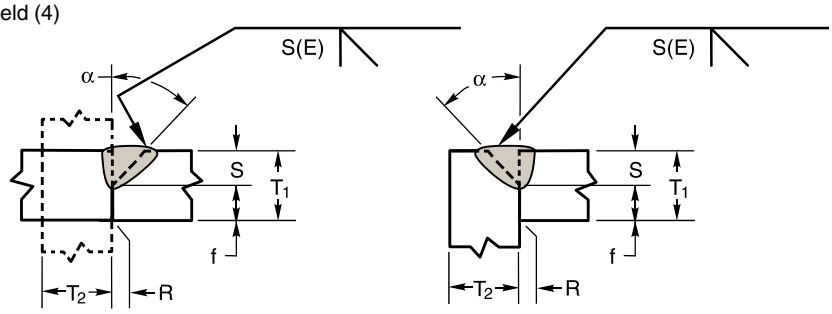


| | Fit-Up Tolerances |
|---|---|
| R | ±2 |
| f | ±2 |
| α | +10°, –5° |

| Welding Process | Joint Designation | Base Metal Thickness (U = unlimited) | | Groove Preparation | | | Suggested Welding Positions | Weld Size (E) | Notes |
|---|---|---|---|---|---|---|---|---|---|
| | | $T_1$ | $T_2$ | Root Opening (R) | Root Face (f) | Groove Angle (α) | | | |
| GMAW | BTC-P4 | 6 min. | U | 0 to 2 | 2 min. | 60° | F, V | S | e, j, k, l |
| | | | | | | | H, OH | S | |
| GTAW | BTC-P4 | 3 min. 13 max. | 13 max. | 0 to 2 | 2 min. | 60° | All | S | e, j, k, l |

Double-bevel-groove weld (5)
Butt joint (B)
T-joint (T)
Corner joint (C)

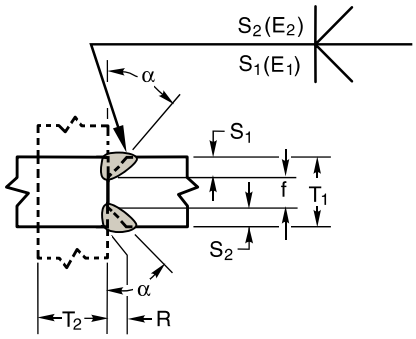


| | Fit-Up Tolerances |
|---|---|
| R | ±2 |
| f | ±2 |
| α | +10°, –5° |

| Welding Process | Joint Designation | Base Metal Thickness (U = unlimited) | | Groove Preparation | | | Suggested Welding Positions | Weld Size ($E_1 + E_2$) | Notes |
|---|---|---|---|---|---|---|---|---|---|
| | | $T_1$ | $T_2$ | Root Opening (R) | Root Face (f) | Groove Angle (α) | | | |
| GMAW | BTC-P5 | 10 min. | U | 0 to 2 | 2 min. | 60° | F, V | $S_1 + S_2$ | e, i, k |
| | | | | | | | H, OH | $S_1 + S_2$ | |
| GTAW | BTC-P5 | 3 min. 13 max. | 13 max. | 0 to 2 | 2 min. | 60° | All | $S_1 + S_2$ | e, i, k |

**Figure B.2 (Continued)—Recommended PJP Groove Welded Joints (Millimeters)**



Copyright American Welding Society
Provided by IHS under license with AWS
No reproduction or networking permitted without license from IHS
Licensee=University of Texas Revised Sub Account/5620001114
Not for Resale, 08/29/2012 23:44:22 MDT

**See Notes on Page 140**

Single-U-groove weld (6)
Butt joint (B)
Corner joint (C)

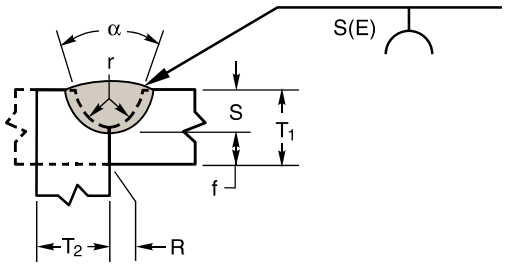


| | Fit-Up Tolerances |
|---|---|
| R | ±2 |
| f | ±2 |
| α | +10°, –5° |
| r | ±2 |

| Welding Process | Joint Designation | Base Metal Thickness (U = unlimited) | | Groove Preparation | | | | Suggested Welding Positions | Weld Size (E) | Notes |
|---|---|---|---|---|---|---|---|---|---|---|
| | | $T_1$ | $T_2$ | Root Opening (R) | Root Face (f) | Groove Angle (α) | Groove Radius (r) | | | |
| GMAW | BC-P6 | 6 min. | U | 0 to 2 | 2 min. | 60° | 6 | All | S | j |

Double-U-groove weld (7)
Butt joint (B)

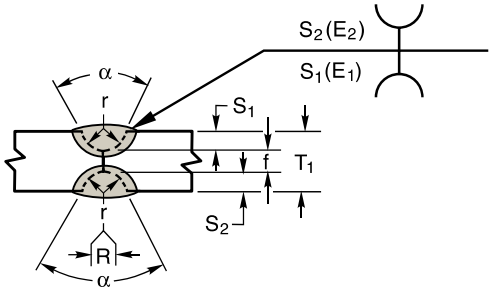


| | Fit-Up Tolerances |
|---|---|
| R | ±2 |
| f | ±2 |
| α | +10°, –5° |
| r | ±2 |

| Welding Process | Joint Designation | Base Metal Thickness | Groove Preparation | | | | Suggested Welding Positions | Weld Size ($E_1 + E_2$) | Notes |
|---|---|---|---|---|---|---|---|---|---|
| | | $T_1$ | Root Opening (R) | Root Face (f) | Groove Angle (α) | Groove Radius (r) | | | |
| GMAW | B-P7 | 10 min. | 0 to 2 | 2 min. | 60° | 6 | All | $S_1 + S_2$ | i, j |

**Figure B.2 (Continued)—Recommended PJP Groove Welded Joints (Millimeters)**



Copyright American Welding Society
Provided by IHS under license with AWS
No reproduction or networking permitted without license from IHS
Licensee=University of Texas Revised Sub Account/5620001114
Not for Resale, 08/29/2012 23:44:22 MDT

**See Notes on Page 140**

Single-J-groove weld (8)
Butt joint (B)
T-joint (T)
Corner joint (C)

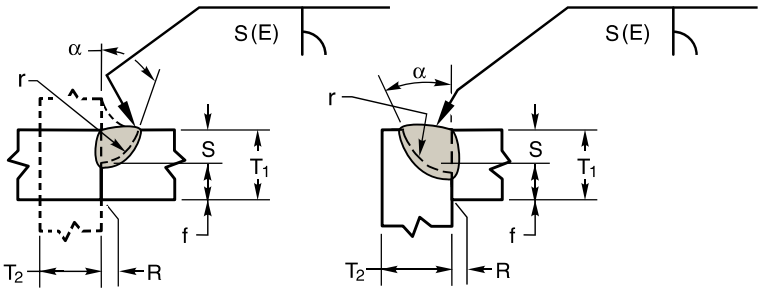


| | Fit-Up Tolerances |
|---|---|
| R | ±2 |
| f | ±2 |
| α | +10°, –5° |
| r | ±2 |

| Welding Process | Joint Designation | Base Metal Thickness (U = unlimited) $T_1$ | $T_2$ | Groove Preparation Root Opening (R) | Root Face (f) | Groove Angle (α) | Groove Radius (r) | Suggested Welding Positions | Weld Size (E) | Notes |
|---|---|---|---|---|---|---|---|---|---|---|
| GMAW | BTC-P8 | 6 min. | U | 0 to 2 | 2 min. | 60° | 10 | All | S | e, j |

Double-J-groove weld (9)
Butt joint (B)
T-joint (T)
Corner joint (C)

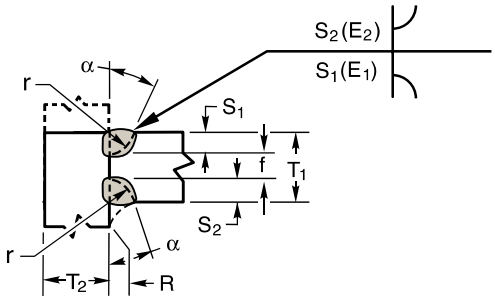


| | Fit-Up Tolerances |
|---|---|
| R | ±2 |
| f | ±2 |
| α | +10°, –5° |
| r | ±2 |

| Welding Process | Joint Designation | Base Metal Thickness (U = unlimited) $T_1$ | $T_2$ | Groove Preparation Root Opening (R) | Root Face (f) | Groove Angle (α) | Groove Radius (r) | Suggested Welding Positions | Weld Size ($E_1 + E_2$) | Notes |
|---|---|---|---|---|---|---|---|---|---|---|
| GMAW | BTC-P9 | 10 min. | U | 0 to 2 | 2 min. | 60° | 10 | All | $S_1 + S_2$ | e, i, k |

**Figure B.2 (Continued)—Recommended PJP Groove Welded Joints (Millimeters)**



Copyright American Welding Society
Provided by IHS under license with AWS
No reproduction or networking permitted without license from IHS
Licensee=University of Texas Revised Sub Account/5620001114
Not for Resale, 08/29/2012 23:44:22 MDT

## Notes for Figures B.1 and B.2

[a] Backgouge root to sound metal before welding other side.
[b] If fillet welds are used in statically loaded structures to reinforce groove welds in corner and T-joints, they shall be equal to $T_1/4$, but need not exceed 3/8 in [10 mm]. Groove welds in corner and T-joints in cyclically loaded structures shall be reinforced with fillet welds equal to $T_1/4$ but need not exceed 3/8 in [10 mm].
[c] If T > 3/4 in [20 mm], U-groove or modified V-groove may be used.
[d] Double-groove welds may have grooves of unequal depth, but the depth of the shallower groove shall be no less than one-fourth of the thickness of the thinner part joined.
[e] For corner joints, the outside groove preparation may be in either or both members, provided the basic groove configuration is not changed and adequate edge distance is maintained to support the welding operations without excessive edge melting.
[f] In the horizontal position the bevel should be on the upper member.
[g] If T > 1-1/2 in [38 mm], double-U-groove or modified V-groove may be used.
[h] When lower plate is beveled, make first root pass on this side.
[i] Root need not be backgouged before welding second side. This joint is not applicable to cyclically loaded structures.
[j] Joints welded from one side. These welds are not applicable to cyclically loaded structures.
[k] If fillet welds are used to reinforce partial penetration groove welds in corner joints, they should be equal to $T_1/4$ but need not exceed 3/8 in [10 mm]. They are not considered in the design strength of the joint.
[l] Unbeveled face is lower edge for horizontal weld.



Copyright American Welding Society
Provided by IHS under license with AWS
No reproduction or networking permitted without license from IHS
Licensee=University of Texas Revised Sub Account/5620001114
Not for Resale, 08/29/2012 23:44:22 MDT

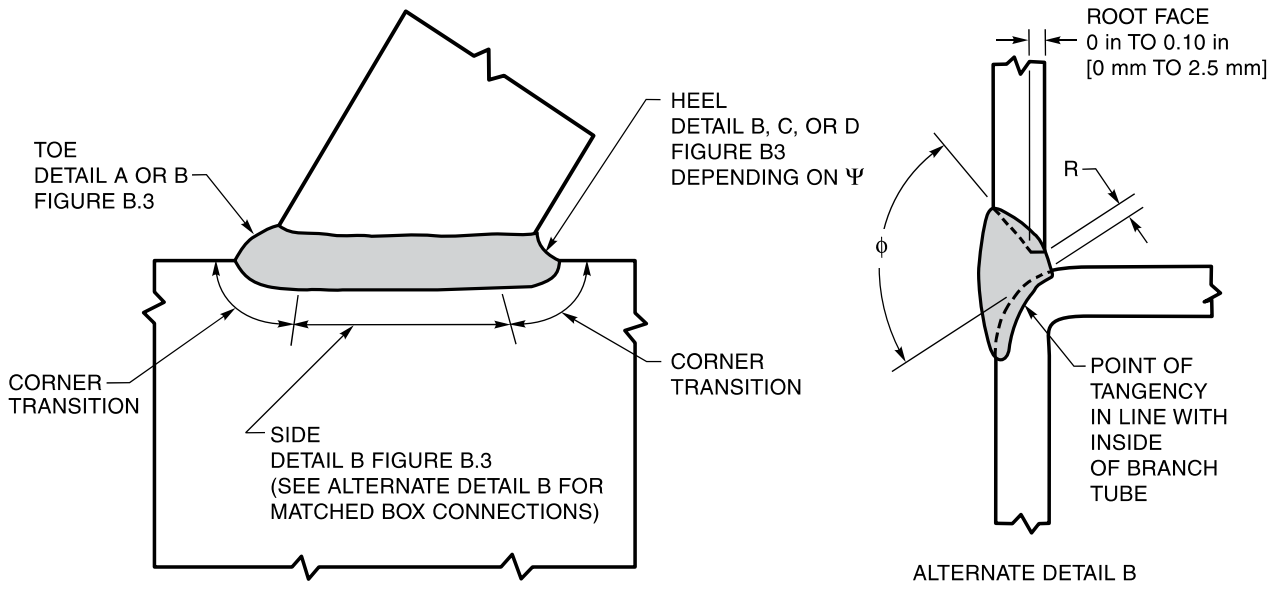


**Figure B.3—PJP Box Connections**



Copyright American Welding Society
Provided by IHS under license with AWS
No reproduction or networking permitted without license from IHS
Licensee=University of Texas Revised Sub Account/5620001114
Not for Resale, 08/29/2012 23:44:22 MDT

| | | DETAIL A<br>Ψ = 180° – 135°<br>(See Detail A Below) | | DETAIL B<br>Ψ = 150° – 50°<br>(See Detail B Below) | | DETAIL C<br>Ψ = 75° – 30°<br>(See Detail C Below) | | DETAIL D<br>Ψ = 40° – 15°<br>(See Detail D Below) |
|---|---|---|---|---|---|---|---|---|
| End preparation (ω) | max. | | | 90°[a] | | Note a | | |
| | min. | | | 10° or 45° for Ψ > 105° | | 10° | | |
| Fitup or root opening (R) | | GMAW (1) | GTAW (1) | GMAW (1) | GTAW (1) | | W max.[b] | ϕ |
| | max. | 3/16 in [5 mm] | 3/16 in [5 mm] | 1/4 in [6 mm] | 1/4 in [6 mm] for ϕ > 45°<br>5/16 in [8 mm] for ϕ > 45° | GTAW (1) (2) | 1/8 in [3 mm]<br>3/16 in [5 mm] | 25°–40°<br>15°–25° |
| | min. | 1/16 in [2 mm]<br>No min. for ϕ > 90° | 1/16 in [2 mm]<br>No min. for ϕ > 120° | 1/16 in [2 mm] | 1/16 in [2 mm] | GMAW (1) (2) | 1/8 in [3 mm]<br>1/4 in [6 mm]<br>3/8 in [10 mm]<br>1/2 in [13 mm] | 30°–40°<br>25°–30°<br>20°–25°<br>15°–20° |
| Joint included angle ϕ | max. | 90° | | 60° for Ψ ≤ 105° | | 40° if more use Detail B | | |
| | min. | 45° | | 37-1/2° if less use Detail C | | 1/2 Ψ | | |
| Completed weld | $t_w$ | ≥$t_b$ | | ≥ $t_b$ for Ψ >90°<br>≥ $t_b$/sin Ψ for Ψ ≤ 90° | | ≥$t_b$/sin Ψ but need not exceed 1.75$t_b$<br>Weld may be built up to meet this | | ≥2 $t_b$ |
| | L | $t_b$/sin Ψ but need not exceed 1.75 $t_b$ | | | | | | |

[a] Otherwise as needed to obtain required ϕ.
[b] Initial passes of back up weld discounted until width of groove (W) is sufficient to assure sound welding; the necessary width of weld groove (w) provided by back-up weld.

Notes:
1. Detail for GTAW also applies to GMAW for which the root pass is made by GTAW.
2. In Details C and D back-up weld may be made by GTAW.

$t_b$ = wall thickness of branch member
$t_w$ = weld size (effective throat)

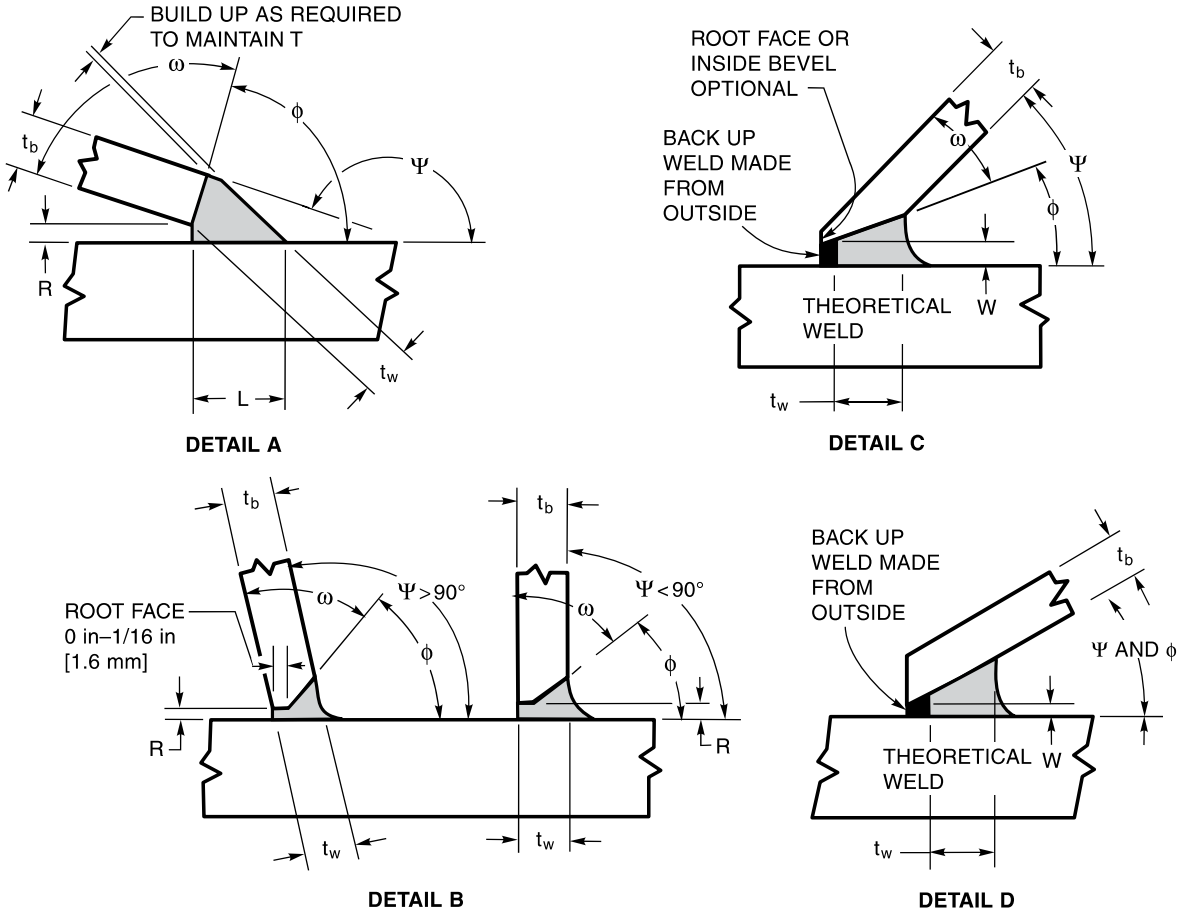


**Figure B.4—PJP—Circular—Tubular Joints for T-, Y-, and K-Connections Made by GTAW and GMAW**



Copyright American Welding Society
Provided by IHS under license with AWS
No reproduction or networking permitted without license from IHS
Licensee=University of Texas Revised Sub Account/5620001114
Not for Resale, 08/29/2012 23:44:22 MDT

# Annex C

There is no Annex C. Annex C was omitted in order to avoid potential confusion with references to Commentary clauses.



Copyright American Welding Society
Provided by IHS under license with AWS
No reproduction or networking permitted without license from IHS
Licensee=University of Texas Revised Sub Account/5620001114
Not for Resale, 08/29/2012 23:44:22 MDT

This page is intentionally blank.



Copyright American Welding Society
Provided by IHS under license with AWS
No reproduction or networking permitted without license from IHS

Licensee=University of Texas Revised Sub Account/5620001114
Not for Resale, 08/29/2012 23:44:22 MDT

# Annex D (Informative)

# Examples of Tubular Connections

This annex is not part of AWS D1.2/D1.2M:2008, *Structural Welding Code—Aluminum,* but is included for informational purposes only.

--`,,`,`,,,,,,```,,,`,`,`,`,,-`-`,,`,`,`,,`---



Copyright American Welding Society
Provided by IHS under license with AWS
No reproduction or networking permitted without license from IHS

Licensee=University of Texas Revised Sub Account/5620001114
Not for Resale, 08/29/2012 23:44:22 MDT

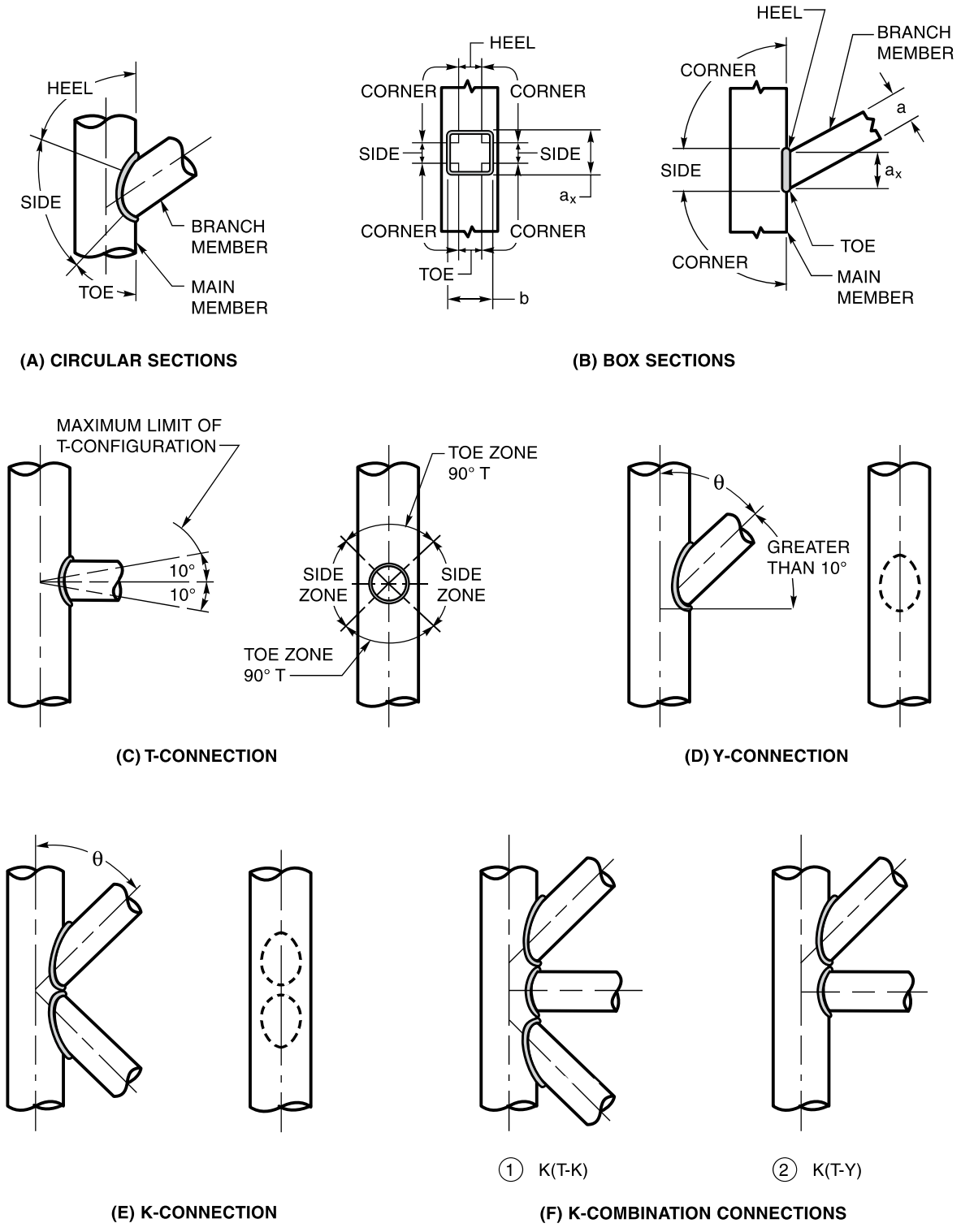


**Figure D.1—Examples of Tubular Connections**



Copyright American Welding Society
Provided by IHS under license with AWS
No reproduction or networking permitted without license from IHS
Licensee=University of Texas Revised Sub Account/5620001114
Not for Resale, 08/29/2012 23:44:22 MDT

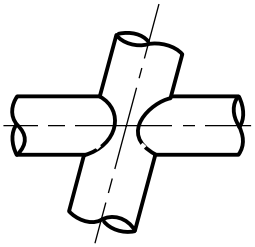

**(G) CROSS CONNECTIONS**

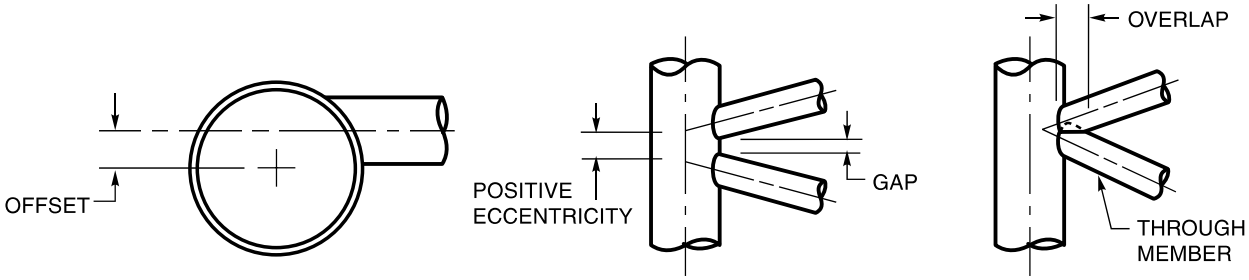


**(H) DEVIATIONS FROM CONCENTRIC CONNECTIONS**

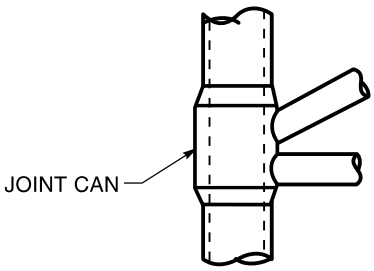


**(I) SIMPLE TUBULAR CONNECTION**

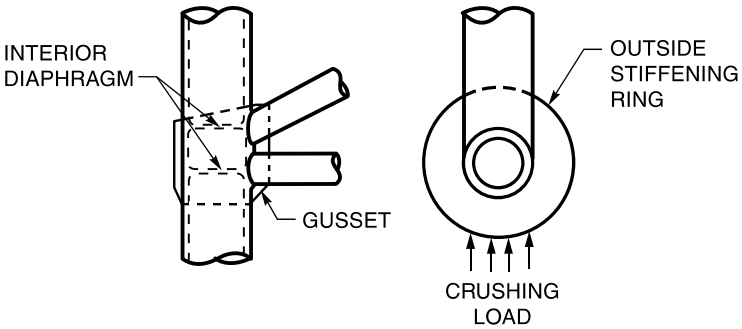


**(J) EXAMPLES OF COMPLEX REINFORCED CONNECTIONS**

**Figure D.1 (Continued)—Examples of Tubular Connections**



Copyright American Welding Society
Provided by IHS under license with AWS
No reproduction or networking permitted without license from IHS
Licensee=University of Texas Revised Sub Account/5620001114
Not for Resale, 08/29/2012 23:44:22 MDT

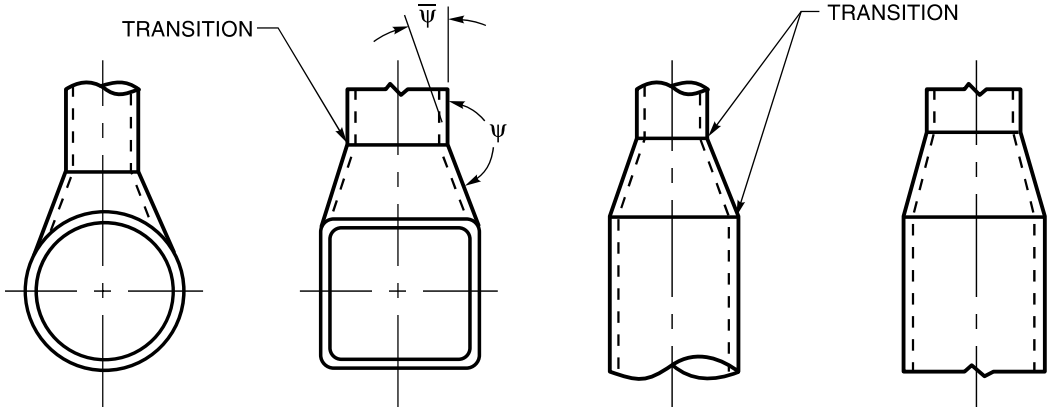


**(K) FLARED CONNECTIONS AND TRANSITIONS**

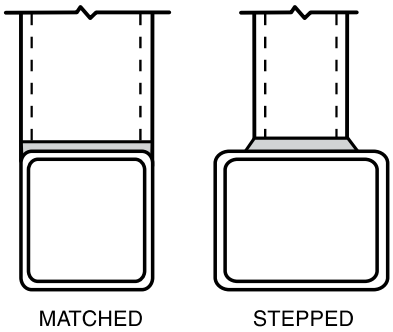


**(L) CONNECTION TYPES FOR BOX SECTIONS**

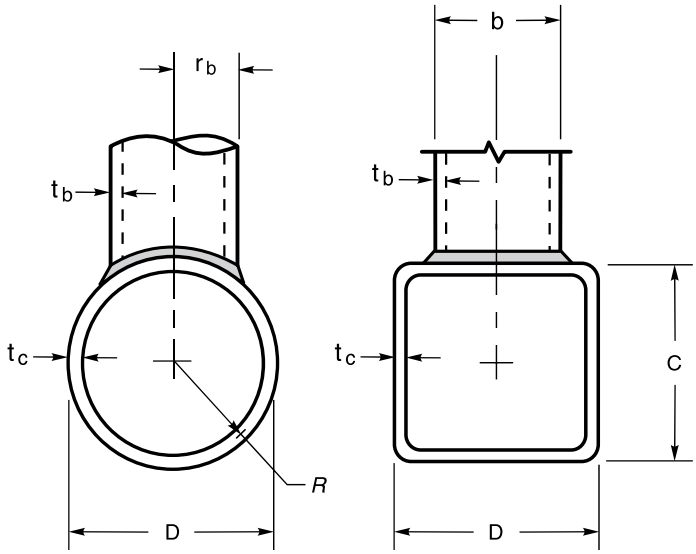


**(M) GEOMETRIC PARAMETERS**

| PARAMETER | CIRCULAR SECTIONS | BOX SECTIONS |
|---|---|---|
| $\beta$ | $r_b/R$ | $b/D$ |
| $\eta$ | — | $a_x/D$<br>See Figure 2.4(B) |
| $\gamma$ | $R/t_c$ | $D/2t_c$ |
| $\tau$ | $t_b/t_c$ | $t_b/t_c$ |
| $\theta$ | ANGLE BETWEEN MEMBER CENTERLINES | |
| $\psi$ | LOCAL DIHEDRAL ANGLE AT A GIVEN POINT ON WELDED JOINT | |

**Figure D.1 (Continued)—Examples of Tubular Connections**



Copyright American Welding Society
Provided by IHS under license with AWS
No reproduction or networking permitted without license from IHS
Licensee=University of Texas Revised Sub Account/5620001114
Not for Resale, 08/29/2012 23:44:22 MDT

# Annex E (Informative)

# Effective Throat

This annex is not part of AWS D1.2/D1.2M:2008, *Structural Welding Code—Aluminum,* but is included for informational purposes only.

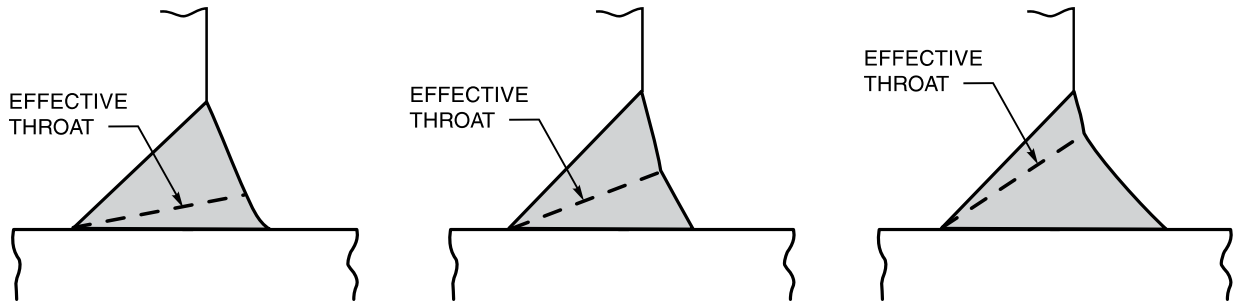


Note: The effective throat of a weld is the minimum distance from the root of a weld to its face, less any reinforcement.

**Figure E.1—Effective Throats of PJP Groove Welds Reinforced with Fillet Welds**



Copyright American Welding Society
Provided by IHS under license with AWS
No reproduction or networking permitted without license from IHS
Licensee=University of Texas Revised Sub Account/5620001114
Not for Resale, 08/29/2012 23:44:22 MDT

This page is intentionally blank.



Copyright American Welding Society
Provided by IHS under license with AWS
No reproduction or networking permitted without license from IHS
Licensee=University of Texas Revised Sub Account/5620001114
Not for Resale, 08/29/2012 23:44:22 MDT

# Annex F (Informative)

# Sample Welding Forms

This annex is not part of AWS D1.2/D1.2M:2008, *Structural Welding Code—Aluminum,* but is included for informational purposes only.



Copyright American Welding Society
Provided by IHS under license with AWS
No reproduction or networking permitted without license from IHS

Licensee=University of Texas Revised Sub Account/5620001114
Not for Resale, 08/29/2012 23:44:22 MDT

## WELDING PROCEDURE SPECIFICATION (WPS)

Welding Procedure
Specification No. _____ Date _____ Approved _____

Revisions _____ Date _____ Approved _____

_____ _____ _____

_____ _____ _____

_____ _____ _____

Supporting PQR Numbers _____ _____ _____ _____

_____ _____ _____ _____

**Joints**

**Groove Design Sketch**

**Backing**

Type _____

Permanent _____

Removed _____

Other _____

_____

_____

_____

_____

**Base Metals**

M No. _____ Thickness _____ to _____

Alloy and Temper _____

**Filler Metal**

F-No. _____ AWS No. _____
Class

Size of electrode _____

Type of electrode _____

Other _____

_____

_____

_____

_____

**Shielding Gas**

Shielding gas(es) _____

Percent composition _____

Flow rate _____

Other _____

_____

_____

_____

**Position**

Position of groove _____

Welding progression _____

Other _____

_____

_____

_____

_____

**Preheat**

Preheat temperature _____

Interpass temperature _____

Form F(a)



Copyright American Welding Society
Provided by IHS under license with AWS
No reproduction or networking permitted without license from IHS

Licensee=University of Texas Revised Sub Account/5620001114
Not for Resale, 08/29/2012 23:44:22 MDT

## WELDING PROCEDURE SPECIFICATION (WPS)

**Cleaning**

Initial cleaning oxide _____

Initial cleaning oil and dirt _____

Interpass cleaning _____

_____

**Postweld Heat Treatment**

Original temper _____

Final temper _____

Temperature _____

Time _____

Quench _____

_____

**Process(es)**

Process _____ Type* _____

Process _____ Type* _____

Electrode (GTAW) _____

_____

**Technique**

Stringer or weave bead _____

Orifice or gas cup size _____

Oscillation _____

Contact tube to work distance _____

Single pass or multipass _____ per side

Tungsten extension _____

Method of backgouging _____

Other _____

_____

_____

_____

_____

*Manual, automatic, polarity, pulse, etc.

| Pass No. | Welding Process | Amps | Volts | Travel Speed |
|---|---|---|---|---|
| | | | | |
| | | | | |
| | | | | |
| | | | | |
| | | | | |
| | | | | |
| | | | | |
| | | | | |
| | | | | |

**Sketch of Welding Sequence**

Form F(a) (Continued)



Copyright American Welding Society
Provided by IHS under license with AWS
No reproduction or networking permitted without license from IHS

Licensee=University of Texas Revised Sub Account/5620001114
Not for Resale, 08/29/2012 23:44:22 MDT

## PROCEDURE QUALIFICATION RECORD (PQR)

**Procedure Qualification Record no.** _____ Date _____

WPS no. _____ Process(es) 1. _____ 2. _____

1. _____ 2. _____

**Design Sketch**

**Welding Sequence Sketch**

**Base metals**

Group no. _____ To _____

Alloy and Temper _____ To _____

Thickness _____ To _____

**Filler metals**

F-number _____

AWS class _____

Diameter _____

Shielding gas(es) _____

Percent composition _____

Flow rate _____

Tungsten electrode (GTAW) _____

Size _____

Type _____

Backup type _____

Alloy _____

Backgouging _____

| Pass No. | Process No. | Amps | Volts | Travel Speed |
|---|---|---|---|---|
| | | | | |
| | | | | |
| | | | | |
| | | | | |
| | | | | |
| | | | | |
| | | | | |

Type of welding power source _____

Single or multiple electrode _____

Stringer or weave bead _____

Welding current _____ ac or dc

Polarity _____

Position of groove _____

**Cleaning procedure initial**

Oxide removal method _____

Degreasing agent _____

**Cleaning procedure interpass** _____

Smut removal _____

**Dye penetrant removal** _____

**Preheat**

Preheat temperature _____

Interpass temperature _____

**Postweld heat treatment** _____

Original temper _____

Final temper _____

Temperature _____

Time _____

Quench _____

Form F(b)



Copyright American Welding Society
Provided by IHS under license with AWS
No reproduction or networking permitted without license from IHS

Licensee=University of Texas Revised Sub Account/5620001114
Not for Resale, 08/29/2012 23:44:22 MDT

## PROCEDURE QUALIFICATION RECORD (PQR)

### GROOVE WELD TEST

| Specimen No. | Width | Thickness | Area | Ultimate Tensile Load, lb | Ultimate Unit Stress, psi | Character of Failure and Location |
|---|---|---|---|---|---|---|
| | | | | | | |
| | | | | | | |
| | | | | | | |
| | | | | | | |
| | | | | | | |

### GUIDED BEND TEST

| Type of Bend | Bend Jig Fig. No. | Result | Type of Bend | Bend Jig Fig. No. | Results |
|---|---|---|---|---|---|
| | | | | | |
| | | | | | |
| | | | | | |
| | | | | | |

Visual examination _____ Pass _____ Fail _____

Type and character of failure _____

### FILLET WELD TEST

Fracture test _____ Root fusion _____
Pass or fail Yes or no

Macro test: Weld size and contour _____ Penetration _____
Sat. or Unsat. Sat. or Unsat.

Welder's name _____ Clock no. _____ Stamp no. _____

Tests conducted by: _____ Laboratory

Test number _____ Per: _____

We certify that the statements in this record are correct and that the test welds were prepared, welded, and tested in accordance with the requirements of Clause 4, AWS D1.2/D1.2M, *Structural Welding Code—Aluminum*.

Signed _____
Manufacturer

Date _____ By _____

Title _____

Form F(b) (Continued)



Copyright American Welding Society
Provided by IHS under license with AWS
No reproduction or networking permitted without license from IHS
Licensee=University of Texas Revised Sub Account/5620001114
Not for Resale, 08/29/2012 23:44:22 MDT

## MANUFACTURER'S RECORD QUALIFICATION TESTS OF WELDER OR WELDING OPERATOR OR TACK WELDER

Name _____ Clock No. _____ Stamp No. _____ Retest _____

Welding Process _____ Type _____

In accordance with welding procedure specification WPS No. _____ and PQR No. _____

Material Group _____ To Group_____ Alloy _____ To _____

Thickness of Test Material_____

Filler Metal F No._____ AWS Class _____ Diameter _____

Other _____

Position _____ Backing Material _____

Electrical Characteristics: Current _____ Polarity _____

Shielding Gas _____ Flow _____

**For Information Only**

Power Source _____

(Make, model, type)

Wire Feeder _____

Welding Torch _____

### VISUAL INSPECTION (3.6)

Appearance_____ Undercut_____ Piping Porosity_____

### GUIDED BEND TEST RESULTS

| Type of Bend | Specimen Thick., in | Bend Jig Fig. No. | Bend Diam., in | Result | Type of Bend | Specimen Thick., in | Bend Jig Fig. No. | Bend Diam., in | Result |
|---|---|---|---|---|---|---|---|---|---|
| | | | | | | | | | |
| | | | | | | | | | |
| | | | | | | | | | |
| | | | | | | | | | |

Radiographic results: Alternative qualification of groove welds by radiography in accordance with 3.21.6.3 _____

_____

Test conducted by _____ Laboratory: Test No._____

per _____

### FILLET WELD TEST RESULTS

Fracture test _____

(Describe the location, nature, and size of any crack or tearing of specimen.)

Length and percent of defects_____ Inches_____ %

Appearance: Fillet Size _____ in X _____ in Convexity or Concavity_____ in

Test conducted by _____ Laboratory: Test No._____

per _____

_____

We certify that the statements in this record are correct and that the test welds were prepared, welded, and tested in accordance with the requirements of AWS D1.2/D1.2M, *Structural Welding Code—Aluminum*.

Signed_____ By _____

(Organization)

Date _____ Title _____

Form F(c)



Copyright American Welding Society
Provided by IHS under license with AWS
No reproduction or networking permitted without license from IHS

Licensee=University of Texas Revised Sub Account/5620001114
Not for Resale, 08/29/2012 23:44:22 MDT

## WELDING PROCEDURE SPECIFICATION (WPS) FOR STUD WELDING APPLICATIONS

Specification No. _____ Date _____ Approved _____

Revisions _____ Date _____ Approved _____

_____ _____ _____

_____ _____ _____

_____ _____ _____

Supporting PQR Numbers _____ _____ _____ _____

_____ _____ _____ _____

**Joints**

**Stud Base Sketch**

**Welding Process**

Arc Stud Welding _____

Capacitor Discharge _____

Contact Method _____

Gap Method _____

Drawn Arc Method _____

**Cleaning**

Initial Oxide Cleaning _____

_____

Initial Oil & Dirt Cleaning _____

_____

**Machine Settings**

Power Supply Make _____

Stud Gun Model _____

Current/Polarity _____

Amperage Range Setting _____

Stud-to-work Distance _____

Lift Setting _____

Cable Size _____ Length _____

**Base Metals**

M-No. _____ Specification _____

Thickness _____ to _____

Alloy and Temper _____

Pipe or Tube Diameter _____

Alloy and Temper _____

**Stud Materials**

F-No. _____ Specification _____

Stud Diameter _____

Other _____

_____

_____

_____

**Shielding Gas**

Shielding Gas(es) _____

Percent Composition _____

Flow Rate _____

Other _____

_____

**Ferrules**

Ferrule Material _____

Ferrule Specification _____

Ferrule Description _____

_____

Model No. _____

Timer Range Setting _____

Capacitance or Power Tap Setting _____

Other _____

_____

_____

Form F(d)



Copyright American Welding Society
Provided by IHS under license with AWS
No reproduction or networking permitted without license from IHS

Licensee=University of Texas Revised Sub Account/5620001114
Not for Resale, 08/29/2012 23:44:22 MDT

## PROCEDURE QUALIFICATION RECORD (PQR) FOR STUD WELDING APPLICATIONS

Procedure Qualification Record No._____ Date _____
WPS No. _____ Process _____

**Machine Settings**
Power Supply Make _____
Model No._____
Stud Gun Model _____
Timer Range Setting _____
Current/Polarity _____
Capacitance or Power Tap Setting _____
_____
Amperage Range Setting_____
Stud-to-work Distance _____
Lift Setting _____
Cable Size _____ Length_____
Other _____

**Base Metals**
M-No. _____ Specification _____
Thickness _____ to_____
Alloy and Temper _____
Pipe or Tube Diameter _____
Alloy and Temper _____

**Ferrules**
Ferrule Material _____
Ferrule Specification _____
Ferrule Description_____
_____

**Cleaning**
Initial Oxide Cleaning _____
_____
Initial Oil & Dirt Cleaning _____
_____

**Stud Base Sketch**

**Stud Materials**
F-No. _____ Specification _____
Stud Diameter _____
Other _____
_____
_____
_____

**Shielding Gas**
Shielding Gas(es)_____
Percent Composition _____
Flow Rate _____
Other _____
_____

**Other**
Welding Position_____
Welding Agent _____
Ferrule Description_____
_____

| Test Results | Visual Acceptance | Bend Test | Tension Test Option No. 1 | Tension Test Option No. 2 |
|---|---|---|---|---|
| Stud No. 1 | | | | |
| Stud No. 2 | | | | |
| Stud No. 3 | | | | |
| Stud No. 4 | | | | |
| Stud No. 5 | | | | |
| Stud No. 6 | | | | |
| Stud No. 7 | | | | |
| Stud No. 8 | | | | |
| Stud No. 9 | | | | |
| Stud No. 10 | | | | |

We certify that the statements in this record are correct and that the test welds were prepared, welded, and tested in accordance with the requirements of Clause 6, AWS D1.2/D1.2M, *Structural Welding Code—Aluminum*.

Signed_____ By _____
(Manufacturer)
Date _____ Title _____

Form F(e)



Copyright American Welding Society
Provided by IHS under license with AWS
No reproduction or networking permitted without license from IHS
Licensee=University of Texas Revised Sub Account/5620001114
Not for Resale, 08/29/2012 23:44:22 MDT

# Annex G (Informative)

# Sample NDT Forms

(This annex is not part of AWS D1.2/D1.2M:2008, *Structural Welding Code—Aluminum,* but is included for informational purposes only.



Copyright American Welding Society
Provided by IHS under license with AWS
No reproduction or networking permitted without license from IHS

Licensee=University of Texas Revised Sub Account/5620001114
Not for Resale, 08/29/2012 23:44:22 MDT

## REPORT OF RADIOGRAPHIC EXAMINATION OF WELDS

Project _____

Quality requirements—section no. _____

Reported to _____

**Weld Location and Identification Sketch**

Weld drawing no. _____

Base alloy(s) _____

Filler alloy _____

**Technique**

Source _____ KV _____ MA _____

Film to source _____

Exposure time _____ Min. _____ Max. _____

Screens _____

Film type _____

(Describe length, width, and thickness of all joints radiographed)

| Date | Weld Identification | Area | Interpretation | | Repairs | | Remarks |
|---|---|---|---|---|---|---|---|
| | | | Accept. | Reject | Accept. | Reject | |
| | | | | | | | |
| | | | | | | | |
| | | | | | | | |
| | | | | | | | |
| | | | | | | | |
| | | | | | | | |
| | | | | | | | |
| | | | | | | | |
| | | | | | | | |
| | | | | | | | |
| | | | | | | | |
| | | | | | | | |
| | | | | | | | |
| | | | | | | | |
| | | | | | | | |
| | | | | | | | |
| | | | | | | | |
| | | | | | | | |

We, the undersigned, certify that the statements in this record are correct and that the welds were prepared and tested in accordance with the requirements of AWS D1.2/D1.2M, *Structural Welding Code—Aluminum*.

Radiographer(s) _____

Interpreter _____

Manufacturer or contractor _____

Authorized by _____

Date _____

Form G(a)



Copyright American Welding Society
Provided by IHS under license with AWS
No reproduction or networking permitted without license from IHS

Licensee=University of Texas Revised Sub Account/5620001114
Not for Resale, 08/29/2012 23:44:22 MDT

## REPORT OF VISUAL AND DYE-PENETRANT EXAMINATION

Project _____

Quality requirements—section no. _____

Reported to _____

**Weld Location and Identification Sketch**

Weld drawing no. _____

Base alloy(s) _____

Filler alloy _____

Postweld treatment _____

Dye-penetrant type _____

(Describe length, width, and thickness of all joints radiographed)

| Date | Weld Identification | Area | Interpretation | | Repairs | | Remarks |
|---|---|---|---|---|---|---|---|
| | | | Accept. | Reject | Accept. | Reject | |
| | | | | | | | |
| | | | | | | | |
| | | | | | | | |
| | | | | | | | |
| | | | | | | | |
| | | | | | | | |
| | | | | | | | |
| | | | | | | | |
| | | | | | | | |
| | | | | | | | |
| | | | | | | | |
| | | | | | | | |
| | | | | | | | |
| | | | | | | | |
| | | | | | | | |
| | | | | | | | |
| | | | | | | | |
| | | | | | | | |

We, the undersigned, certify that the statements in this record are correct and that the welds were prepared and tested in accordance with the requirements of AWS D1.2/D1.2M, *Structural Welding Code—Aluminum*.

Inspector _____

Date _____

Manufacturer or contractor _____

Authorized by _____

Date _____

Form G(b)



Copyright American Welding Society
Provided by IHS under license with AWS
No reproduction or networking permitted without license from IHS

Licensee=University of Texas Revised Sub Account/5620001114
Not for Resale, 08/29/2012 23:44:22 MDT

This page is intentionally blank.



Copyright American Welding Society
Provided by IHS under license with AWS
No reproduction or networking permitted without license from IHS

Licensee=University of Texas Revised Sub Account/5620001114
Not for Resale, 08/29/2012 23:44:22 MDT

# Annex H (Informative)

# Solutions for Macroetching Aluminum Weldments

This annex is not part of AWS D1.2/D1.2M:2008, *Structural Welding Code—Aluminum,* but is included for informational purposes only.

## H1. Acidic Etchant:

15 ml—hydrochloric acid (conc.)

10 ml—hydrofluoric acid (48%)

85 ml—water

The solution shall be used at room temperature. The weldment should be rinsed in clean water. Proper safety procedures shall be followed when handling and mixing acids. Always add the acids to water, never add the water to the acids. Always wear safety goggles when mixing chemicals. The etching solution should never be allowed to come into contact with the skin or clothing.

## H2. Basic Etchant

A 20% solution of sodium hydroxide is applied at 120°F [50°C] to the area to be etched. The weldment should be rinsed in clean water. If desmutting is necessary to reveal the weld boundaries, a concentrated nitric acid dip at room temperature should be used. The weldment should be rinsed thoroughly in clean water prior to handling with bare hands.

## H3. Safety Procedure

**H3.1 General.** All chemicals used as etchants are potentially dangerous. All persons using any of the etchants listed in H1 and H2 should be thoroughly familiar with all of the chemicals involved and the proper procedure for handling and mixing these chemicals. Safety goggles must be worn at all times when using chemical etchants. Avoid contact with the skin.

### H3.2 Handling and Mixing Acids

**H3.2.1** Caution shall be used in mixing all chemicals, especially strong acids. In all cases, various chemicals should be added slowly INTO the water or solvent while stirring.

**H3.2.2 Hydrofluoric Acid, HF.** In cases where hydrofluoric acid is used, the solution should be mixed and used in polyethylene vessels. **CAUTION:** Hydrofluoric acid or its solutions should not be allowed to contact the skin since it can cause painful, serious ulcers if not washed off immediately.

## H4. Basic Recommendations for Handling of Etching Chemicals

**H4.1** Always use protective garb (gloves, apron, protective glasses or face shield, etc.) when pouring, mixing, or etching.

**H4.2** Use proper devices (glass or plastic) for weighing, mixing, containing, or storage of solutions.

**H4.3** Wipe up or flush any spills.

**H4.4** Dispose of any solutions not properly identified in an environmentally acceptable manner. Do NOT use unidentified solutions; when in doubt throw it out!

**H4.5** Store and handle chemicals according to manufacturer's recommendations and observe any printed cautions on chemical containers.

**H4.6** If uncertain about the proper use of a chemical, contact your Safety Department.



--`,,`,`,,,,,`,,,,`,,`,`,,`,`,,`,`,,`,`,,`,`,,`,`,,`---

Copyright American Welding Society
Provided by IHS under license with AWS
No reproduction or networking permitted without license from IHS

Licensee=University of Texas Revised Sub Account/5620001114
Not for Resale, 08/29/2012 23:44:22 MDT

This page is intentionally blank.



Copyright American Welding Society
Provided by IHS under license with AWS
No reproduction or networking permitted without license from IHS
Licensee=University of Texas Revised Sub Account/5620001114
Not for Resale, 08/29/2012 23:44:22 MDT

# Annex I (Informative)

# Guide for Specification Writers

This annex is not part of AWS D1.2/D1.2M:2008, *Structural Welding Code—Aluminum,* but is included for informational purposes only.

A statement in a contract document that all welding be done in conformance with AWS D1.2/D1.2M, *Structural Welding Code—Aluminum*, covers only the mandatory welding requirements. Other provisions in the code are optional. They apply only when they are specified. Following are some of the more commonly used optional provisions and examples of how they may be specified.

| **Optional Provision** | **Typical Specification** |
|---|---|
| **Fabrication/Erection Inspection** | Fabrication/Erection inspection shall be performed by the Owner. (When not the responsibility of the Contractor 5.1.1)<br>or<br>Fabrication/Erection inspection shall be performed by testing agency retained by the Owner. |

*NOTE: When fabrication/erection inspection is performed by the Owner or the Owner's testing agency, complete details on the extent of such testing shall be given.*

| | |
|---|---|
| **Verification Inspection** | Verification inspection shall be performed by the Contractor. (5.1.1)<br>or<br>Verification inspection shall be performed by the Owner.<br>or<br>Verification inspection shall be performed by a testing agency retained by the Owner.<br>or<br>Verification inspection is waived. |

**Nondestructive Testing—General:** For each type of joint and type of stress, indicate type of NDT to be used, extent of (5.7) inspection, any special techniques to be used, and acceptance criteria. Specific examples (to be interpreted as examples and not recommendations) follow. The Engineer shall determine the specific requirements for each condition.

**Statically Loaded Structure Fabrication:** Moment Connection Tension Groove Welds in Butt Joints—25% UT inspection of each of the first four joints, dropping to 10% of each of the remaining joints.

Fillet welds—LP—Inspection of 10% of the length of each weld.

**Cyclically Loaded Structure Fabrication:** Tension Butt Joints—100% RT



Copyright American Welding Society
Provided by IHS under license with AWS
No reproduction or networking permitted without license from IHS
Licensee=University of Texas Revised Sub Account/5620001114
Not for Resale, 08/29/2012 23:44:22 MDT

This page is intentionally blank.



Copyright American Welding Society
Provided by IHS under license with AWS
No reproduction or networking permitted without license from IHS

Licensee=University of Texas Revised Sub Account/5620001114
Not for Resale, 08/29/2012 23:44:22 MDT

# Annex J (Informative)

# Safe Practices

This annex is not part of AWS D1.2/D1.2M:2008, *Structural Welding Code—Aluminum,* but is included for informational purposes only.

This annex covers many of the basic elements of safety general to arc welding processes. It includes many, but not all, of the safety aspects related to structural welding. The hazards that may be encountered and the practices that should minimize personal injury and property damage are reviewed here.

## J1. Electrical Hazards

Electric shock can kill. However, it can be avoided. Live electrical parts should not be touched. The manufacturer's instructions and recommended safe practices should be read and understood. Faulty installation, improper grounding, and incorrect operation and maintenance of electrical equipment are all sources of danger.

All electrical equipment and the workpiece should be grounded. A separate connection is required to ground the workpiece. The work lead should not be mistaken for a ground connection.

To prevent shock, the work area, equipment, and clothing should be kept dry at all times. Dry gloves and rubber-soled shoes should be worn. The welder should stand on a dry board or insulated platform.

Cables and connectors should be kept in good condition. Worn, damaged, or bare cables should not be used. In case of electric shock, the power should be turned off immediately. If the rescuer must resort to pulling the victim from the live contact, nonconducting materials should be used. A physician should be called and CPR continued until breathing has been restored, or until a physician has arrived (see References 1, 2, and 3).

## J2. Fumes and Gases

Many welding, cutting, and allied processes produce fumes and gases which may be harmful to one's health. Fumes and solid particles originate from welding consumables, the base metal, and any coatings present on the base metal. Gases are produced during the welding process or may be produced by the effects of process radiation on the surrounding environment. All persons associated with the welding operation should acquaint themselves with the effects of these fumes and gases.

The possible effects of over-exposure to fumes and gases range from irritation of eyes, skin, and respiratory system to more severe complications. Effects may occur immediately or at some later time. Fumes can cause symptoms such as nausea, headaches, dizziness, and metal fume fever.

Sufficient ventilation, exhaust at the arc, or both, should be used to keep fumes and gases from breathing zones and the general work area.

For more detailed information on fumes and gases produced by the various welding processes, see References 4, 5, and 6.

## J3. Noise

Excessive noise is a known health hazard. Exposure to excessive noise can cause loss of hearing. This loss of hearing can be either full or partial, and temporary or permanent. Excessive noise adversely affects hearing capability. In addition, there is evidence that excessive noise affects other bodily functions and behavior.



Copyright American Welding Society
Provided by IHS under license with AWS
No reproduction or networking permitted without license from IHS

Licensee=University of Texas Revised Sub Account/5620001114
Not for Resale, 08/29/2012 23:44:22 MDT

Personal protective devices such as ear muffs or ear plugs may be employed. Generally, these devices are only accepted when engineering controls are not fully effective. For more information, see References 4, 5, and 7.

## J4. Burn Protection

Molten metal, sparks, slag, and hot work surfaces are produced by welding, cutting, and allied processes. These can cause burns if precautionary measures are not used.

Workers should wear protective clothing made of fire-resistant material. Pant cuffs or clothing with open pockets or other places on clothing that can catch and retain molten metal or sparks should not be worn. High-top shoes or leather leggings and fire-resistant gloves should be worn. Pant legs should be worn over the outside of high-top boots. Helmets or hand shields that provide protection for the face, neck, and ears should be worn, as well as a covering to protect the head. Clothing should be kept free of grease and oil. Combustible materials should not be carried in pockets. If any combustible substance is spilled on clothing, it should be replaced with clean fire-resistant clothing before working with open arcs or flame.

Appropriate eye protection should be used at all times. Goggles or equivalent eye protection also should be worn.

Insulated gloves should be worn at all times when in contact with hot items or handling electrical equipment.

For more detailed information on personal protection, References 1, 4, 8, and 9 should be consulted.

## J5. Fire Prevention

Molten metal, sparks, slag, and hot work surfaces are produced by welding, cutting, and allied processes. These can cause fire or explosion if precautionary measures are not used.

Explosions have occurred where welding or cutting has been performed in spaces containing flammable gases, vapors, liquids, or dust. All combustible material should be removed from the work area. Where possible, move the work to a location well away from combustible materials. If neither action is possible, combustibles should be protected with a cover of fire-resistant material. All combustible materials should be removed or safely protected within a radius of 35 ft [11 m] around the work area.

Welding or cutting should not be done in atmospheres containing dangerously reactive or flammable gases, vapors, liquids, or dust. Heat should not be applied to a container that has held an unknown substance or a combustible material and whose contents when heated can produce flammable or explosive vapors. Adequate ventilation should be provided in work areas to prevent accumulation of flammable gases, vapors or dusts. Containers should be cleaned and purged before applying heat.

For more detailed information on fire hazards from welding and cutting operations, see References 1, 4, 10, and 11.

## J6. Radiation

Welding, cutting, and allied operations may produce radiant energy (radiation) harmful to health. All persons associated with welding operations should acquaint themselves with the effects of this radiant energy.

Radiant energy may be ionizing (such as X-rays) or nonionizing (such as ultraviolet, visible light, or infrared). Radiation can produce a variety of effects such as skin burns and eye damage, if excessive exposure occurs.

Some processes such as resistance welding and cold pressure welding ordinarily produce negligible quantities of radiant energy. However, most arc welding and cutting processes (except submerged arc when used properly), laser welding and torch welding, cutting, brazing, or soldering can produce quantities of nonionizing radiation such that precautionary measures are necessary.

Protection from possible harmful radiation effects include the following:

(1) Welding arcs should not be viewed except through welding filter plates (see Reference 8). Transparent welding curtains are not intended as welding filter plates, but rather are intended to protect passersby from incidental exposure.

(2) Exposed skin should be protected with adequate gloves and clothing as specified (see Reference 1).

(3) The casual passerby to welding operations should be protected by the use of screens, curtains, or adequate distance from aisles, walkways, etc.

(4) Safety glasses with ultraviolet protective side shields have been shown to provide some beneficial protection from ultraviolet radiation produced by welding arcs.

## J7. Radiographic Procedures

The problems of protecting personnel against X-rays and gamma rays are not covered in this standard. Radiographic procedures should be carried out under protected conditions so that the radiographer will not receive a



Copyright American Welding Society
Provided by IHS under license with AWS
No reproduction or networking permitted without license from IHS
Licensee=University of Texas Revised Sub Account/5620001114
Not for Resale, 08/29/2012 23:44:22 MDT

maximum whole-body radiation dosage exceeding that permitted by city, state, or national codes. Mandatory rules and regulations are published by governmental licensing agencies. Careful radiation surveys should be made in conformance with appropriate regulations and codes and should be conducted in the inspection area as well as adjacent areas under all possible operating conditions.

For more complete information the user should refer to References 12, 13, 14, 15, and 16.

**References**


1. American Welding Society. *Safety in Welding, Cutting, and Allied Processes*, ANSI Z49.1. Miami, Florida: American Welding Society.
2. American Welding Society. *Safe Practices* (Reprint from Welding Handbook, Volume 1, Eighth Edition), Miami, Florida: American Welding Society.
3. National Fire Protection Association. *National Electrical Code* NFPA No. 70. Quincy, Massachusetts: National Fire Protection Association.
4. Government Printing Office. *Code of Federal Regulations* (CFR), Title 29, Chapter XVII, Part 1910. Washington, DC: U.S. Government Printing Office.
5. American Conference of Governmental Industrial Hygienists. *Threshold Limit Values for Chemical Substances and Physical Agents in the Workroom Environment.* Cincinnati, Ohio: American Conference of Governmental Industrial Hygienists (ACGIH).
6. American Welding Society. *Fumes and Gases in the Welding Environment.* Miami, Florida: American Welding Society.
7. American Welding Society. *Method for Sound Level Measurement of Manual Arc Welding and Cutting Processes*, AWS F6.1. Miami, Florida: American Welding Society.
8. American National Standards Institute. *Practice for Occupational and Educational Eye and Face Protection,* ANSI Z87.1. New York: American National Standards Institute.
9. American National Standards Institute. *Safety-Toe Footwear,* ANSI Z41.1. New York: American National Standards Institute.
10. National Fire Protection Association. NFPA 51B: *Fire Prevention During Welding, Cutting, and Other Hot Work,* Quincy, Massachusetts: National Fire Protection Association.
11. American Welding Society. *Recommended Safe Practice for Preparation for Welding and Cutting of Containers and Piping,* AWS F4.1. Miami, Florida: American Welding Society.
12. National Institute of Standards and Technology, NBS-HDBK-60, *X-ray Protection*
13. National Institute of Standards and Technology, NBS-HDBK-93, *Safe Standard for Non-Medica X-ray and Sealed Gamma Ray Sources*
14. National Institute of Standards and Technology, NBS-HDBK-114, *General Safety Standard for Installation using Non-Medical X-ray and Sealed Gamma Ray Sources up to 10 MeV Equipment Design and Use*
15. ASTM, ASTM E 586, *Definitions of Terms Relating to Gamma and X-Radiography*, Annual Book of ASTM Standards, Section 3, Volume 03.03. Conshohocken, PA: ASTM, 1988.
16. U.S. Government Printing Office, Federal Standard No. 21-*Code of Federal Regulations,* 1020.40 *Safety Requirements for Cabinet X-Ray*. Washington, DC: U.S. Government Printing Office.




Copyright American Welding Society
Provided by IHS under license with AWS
No reproduction or networking permitted without license from IHS
Licensee=University of Texas Revised Sub Account/5620001114
Not for Resale, 08/29/2012 23:44:22 MDT

This page is intentionally blank.

--`,,`,,`,,,,,,```,,,`,,`,,`,```,,-`-`,,`,,`,`,,`---



Copyright American Welding Society
Provided by IHS under license with AWS
No reproduction or networking permitted without license from IHS

Licensee=University of Texas Revised Sub Account/5620001114
Not for Resale, 08/29/2012 23:44:22 MDT

# Annex K

# Tungsten Electrodes

This annex is not part of AWS D1.2/D1.2M:2008, *Structural Welding Code—Aluminum,* but is included for informational purposes only.

**Table K.1**
**Typical Current Ranges for Tungsten Electrodes[a]**

| Electrode Diameter | | Direct Current, A | | Alternating Current, A | | | |
|---|---|---|---|---|---|---|---|
| | | DCEN | DCEP | Unbalanced Wave | | Balanced Wave | |
| in | mm | EWP<br>EWTh-1<br>EWTh-2 | EWP<br>EWTh-1<br>EWTh-2 | EWP | EWTh-1<br>EWTh-2<br>EWZr | EWP | EWTh-1<br>EWTh-2<br>EWZr |
| 0.010 | 0.25 | Up to 15 | Note b | Up to 15 | Up to 15 | Up to 15 | Up to 15 |
| 0.020 | 0.51 | 5–20 | Note b | 5–15 | 5–20 | 10–20 | 5–20 |
| 0.040 | 1.02 | 15–80 | Note b | 10–60 | 15–80 | 20–30 | 20–60 |
| 1/16 | 1.59 | 70–150 | 10–20 | 50–100 | 70–150 | 30–80 | 60–120 |
| 3/32 | 2.38 | 150–250 | 15–30 | 100–160 | 140–235 | 60–130 | 100–180 |
| 1/8 | 3.18 | 250–400 | 25–40 | 150–210 | 225–325 | 100–180 | 160–250 |
| 5/32 | 3.97 | 400–500 | 40–55 | 200–275 | 300–400 | 160–240 | 200–320 |
| 3/16 | 4.76 | 500–750 | 55–80 | 250–350 | 400–500 | 190–300 | 290–390 |
| 1/4 | 6.35 | 750–1000 | 80–125 | 325–450 | 500–630 | 250–400 | 340–525 |

[a] All values are based on the use of argon as the shielding gas. Other current values may be employed depending on the shielding gas, type of equipment, and application.
[b] These combinations are not commonly used.



Copyright American Welding Society
Provided by IHS under license with AWS
No reproduction or networking permitted without license from IHS
Licensee=University of Texas Revised Sub Account/5620001114
Not for Resale, 08/29/2012 23:44:22 MDT

**Table K.2**
**Typical Chemical Composition of Tungsten Electrodes[a]**

| AWS Classification | Tungsten, Min. Percent | Thoria, Percent | Zirconia, Percent | Total Other Elements, Max. Percent |
|---|---|---|---|---|
| EWP | 99.5 | — | — | 0.5 |
| EWTh-1 | 98.5 | 0.8 to 1.2 | — | 0.5 |
| EWTh-2 | 97.5 | 1.7 to 2.2 | — | 0.5 |
| EWZr | 99.2 | — | 0.15 to 0.40 | 0.5 |

[a] For additional information, see Volume 2 of the Ninth Edition of the *Welding Handbook*, Chapter 3, Gas Tungsten Arc Welding.



Copyright American Welding Society
Provided by IHS under license with AWS
No reproduction or networking permitted without license from IHS
Licensee=University of Texas Revised Sub Account/5620001114
Not for Resale, 08/29/2012 23:44:22 MDT

# Annex L (Informative)

# Guidelines for the Preparation of Technical Inquiries for the Structural Welding Committee

This annex is not part of AWS D1.2/D1.2M:2008, *Structural Welding Code—Aluminum,* but is included for informational purposes only.

## L1. Introduction

The American Welding Society (AWS) Board of Directors has adopted a policy whereby all official interpretations of AWS standards are handled in a formal manner. Under this policy, all interpretations are made by the committee that is responsible for the standard. Official communication concerning an interpretation is directed through the AWS staff member who works with that committee. The policy requires that all requests for an interpretation be submitted in writing. Such requests will be handled as expeditiously as possible, but due to the complexity of the work and the procedures that must be followed, some interpretations may require considerable time.

## L2. Procedure

All inquiries shall be directed to:

Managing Director
Technical Services Division
American Welding Society
550 N.W. LeJeune Road
Miami, FL 33126

All inquiries shall contain the name, address, and affiliation of the inquirer, and they shall provide enough information for the committee to understand the point of concern in the inquiry. When the point is not clearly defined, the inquiry will be returned for clarification. For efficient handling, all inquiries should be typewritten and in the format specified below.

**L2.1 Scope.** Each inquiry shall address one single provision of the code, unless the point of the inquiry involves two or more interrelated provisions. The provision(s) shall be identified in the scope of the inquiry along with the edition of the code that contains the provision(s) the inquirer is addressing.

**L2.2 Purpose of the Inquiry.** The purpose of the inquiry shall be stated in this portion of the inquiry. The purpose can be either to obtain an interpretation of a code's requirement, or to request the revision of a particular provision in the code.

**L2.3 Content of the Inquiry.** The inquiry should be concise, yet complete, to enable the committee to quickly and fully understand the point of the inquiry. Sketches should be used when appropriate and all paragraphs, figures, and tables (or the Annex), which bear on the inquiry shall be cited. If the point of the inquiry is to obtain a revision of the code, the inquiry must provide technical justification for that revision.

**L2.4 Proposed Reply.** The inquirer should, as a proposed reply, state an interpretation of the provision that is the point of the inquiry, or the wording for a proposed revision, if that is what inquirer seeks.

## L3. Interpretation of Code Provisions

Interpretations of code provisions are made by the Structural Welding Committee. The secretary of the committee refers all inquiries to the chair of the particular subcommittee that has jurisdiction over the portion of the code addressed by the inquiry. The subcommittee



Copyright American Welding Society
Provided by IHS under license with AWS
No reproduction or networking permitted without license from IHS

Licensee=University of Texas Revised Sub Account/5620001114
Not for Resale, 08/29/2012 23:44:22 MDT

reviews the inquiry and the proposed reply to determine what the response to the inquiry should be. Following the subcommittee's development of the response, the inquiry and the response are presented to the entire Structural Welding Committee for review and approval. Upon approval by the committee, the interpretation is an official interpretation of the Society, and the secretary transmits the response to the inquirer and to the *Welding Journal* for publication.

## L4. Publication of Interpretations

All official interpretations shall appear in the *Welding Journal* and will be posted on the AWS web site.

## L5. Telephone Inquiries

Telephone inquiries to AWS Headquarters concerning the *Structural Welding Code* should be limited to questions of a general nature or to matters directly related to the use of the code. The AWS Board of Directors' policy requires that all AWS staff members respond to a telephone request for an official interpretation of any AWS standard with the information that such an interpretation can be obtained only through a written request. Headquarters staff cannot provide consulting services. However, the staff can refer a caller to any of those consultants whose names are on file at AWS Headquarters.

## L6. The Structural Welding Committee

The activities of the Structural Welding Committee regarding interpretations are limited strictly to the interpretation of code provisions or to consideration of revisions to existing provisions on the basis of new data or technology. Neither AWS staff nor the committees are in a position to offer interpretive or consulting services on: (1) specific engineering problems, or (2) code requirements applied to fabrications outside the scope of the code or points not specifically covered by the code. In such cases, the inquirer should seek assistance from a competent engineer experienced in the particular field of interest.



Copyright American Welding Society
Provided by IHS under license with AWS
No reproduction or networking permitted without license from IHS
Licensee=University of Texas Revised Sub Account/5620001114
Not for Resale, 08/29/2012 23:44:22 MDT

# Commentary on Structural Welding Code—Aluminum

## Fifth Edition

Prepared by the
AWS D1 Committee on Structural Welding

Under the Direction of the
AWS Technical Activities Committee

Approved by the
AWS Board of Directors



Copyright American Welding Society
Provided by IHS under license with AWS
No reproduction or networking permitted without license from IHS

Licensee=University of Texas Revised Sub Account/5620001114
Not for Resale, 08/29/2012 23:44:22 MDT

This page is intentionally blank.



Copyright American Welding Society
Provided by IHS under license with AWS
No reproduction or networking permitted without license from IHS

Licensee=University of Texas Revised Sub Account/5620001114
Not for Resale, 08/29/2012 23:44:22 MDT

# Foreword

This foreword is not part of the Commentary of AWS D1.2/D1.2M:2008, *Structural Welding Code—Aluminum*, but is included for informational purposes only.

This commentary on AWS D1.2/D1.2M:2008, *Structural Welding Code—Aluminum*, has been prepared to generate better understanding in the application of the code to welding in aluminum construction. Since the code is written in the form of a specification, it cannot present background material or discuss the Structural Welding Committee's intent; it is the function of this commentary to fill that need. Suggestions for application, as well as clarification of the code requirements, are offered with specific emphasis on clauses that may be less familiar to the user.

The committee recommends that the Owner or Owner's representative be guided by this commentary in application of the code to the structure to be welded. The commentary is not intended to supplement code requirements, but only to provide a useful document for interpretation and application of the code; the commentary provisions are not binding.

The fundamental premise of the code is to provide general stipulations applicable to any situation and to leave sufficient latitude for the exercise of engineering judgement. The code represents the collective experience of the committee. Although some provisions may seem overly conservative, they have been based on sound engineering practice. The committee believes that a commentary is the most suitable means to provide clarification as well as proper interpretation of many of the code requirements. Obviously, the size of the commentary had to impose some limitations with respect to the extent of coverage.

This commentary is not intended to provide a historical background of the development of the code, nor is it intended to provide a detailed resume of the studies and research data reviewed by the Committee in formulating the provisions of the code.

Generally, the code does not treat such design considerations as loading and the computation of stresses for the purpose of proportioning the load-carrying members of the structure and their connections. Such considerations are assumed to be covered elsewhere, such as the Aluminum Association's *Specification for Aluminum Structures*, or similar documents.

The committee has endeavored to produce a useful document suitable in language, form, and coverage for welding in aluminum construction. The code provides a means for establishing welding standards for use in design and construction by the Owner or the Owner's designated representative. The code incorporates provisions for regulation of welding that are considered necessary for public safety.



--`,,`,`,,`,,,,``,,,``,,`,`,```,,-`-`,,`,,`,`,,`---
Copyright American Welding Society
Provided by IHS under license with AWS
No reproduction or networking permitted without license from IHS
Licensee=University of Texas Revised Sub Account/5620001114
Not for Resale, 08/29/2012 23:44:22 MDT

This page is intentionally blank.



Copyright American Welding Society
Provided by IHS under license with AWS
No reproduction or networking permitted without license from IHS
Licensee=University of Texas Revised Sub Account/5620001114
Not for Resale, 08/29/2012 23:44:22 MDT

# Commentary on Structural Welding Code—Aluminum

*NOTE: All references to numbered subclauses, tables, and figures, unless otherwise indicated, refer to subclauses, tables, or figures in AWS D1.2/D1.2M:2008,* Structural Welding Code—Aluminum. *References to subclause, tables, or figures in this commentary are prefixed with a "C-." For example, 3.1 is in AWS D1.2, while C-3.1 is in this commentary.*

## C-1. General Requirements

### C-1.1 Scope

The code provides welding requirements for the construction of aluminum structures. It is intended to be complementary with any general code or specification for design and construction of aluminum structures.

Although the provisions of the code are generally applicable to any aluminum structure, owners, architects, and engineers using the code for structures should recognize that not all of its provisions may be applicable or suitable to their particular structures. Recommended provisions are given in Clause 2, Design, Clause 3, Qualification, and Clause 4, Fabrication. Clause 3 includes WPSs, with specific reference to preheat, filler metals, and other pertinent requirements.

However, any modifications of the code deemed necessary by these authorities should be clearly referenced in the contractual agreement between the Owner and the Contractor. As used in this commentary, the Contractor designates the party responsible for performing the welding under the code. The term is used collectively to mean Contractor, fabricator, erector, manufacturer, etc.

The Engineer may accept qualifications to other standards. However, such acceptance should be based upon properly qualified performance and procedure tests, as well as service conditions.



Copyright American Welding Society
Provided by IHS under license with AWS
No reproduction or networking permitted without license from IHS
Licensee=University of Texas Revised Sub Account/5620001114
Not for Resale, 08/29/2012 23:44:22 MDT

This page is intentionally blank.



Copyright American Welding Society
Provided by IHS under license with AWS
No reproduction or networking permitted without license from IHS

Licensee=University of Texas Revised Sub Account/5620001114
Not for Resale, 08/29/2012 23:44:22 MDT

# C-2. Design of Welded Connections

## C-2.0 Scope

The Committee recognized while using a general format in AWS D1.2/D1.2M, *Structural Welding Code—Aluminum*, similar to that of AWS D1.1/D1.1M, *Structural Welding Code—Steel*, that the types of tubular structures made from aluminum likely would not be of the magnitude of offshore drilling platforms. Further, the Committee also recognized that the workmanship requirements differ greatly among tubular structures.

For these reasons, this code establishes two classes of tubular structures with different workmanship requirements. Unless otherwise specified, Class I structures are those identified in *Standard Specifications for Structural Supports for Highway Signs, Luminaries, and Traffic Signals*, published by AASHTO (see Annex A). Structures that have more stringent requirements are Class II. There are also certain support structures in the AASHTO specifications, that should be treated as Class II structures because of their configuration and loadings.

## C-2.1 Structural Design

Designers should be aware that heat-treatable structural aluminum alloys lose significant strength when welded. Such losses must be considered in designing welded structures.

Allowable stresses in heat-treated and work-hardened structural alloys may vary with the alloy and the extent of the HAZ.

For allowable stresses for the various available alloys, the user of the code is referred to the documents listed in Annex A, and in particular to the *Aluminum Design Manual: Specification for Aluminum Structures* (Aluminum Association, Inc.).

Clauses 1 through 5 are supplemented by the specific requirements of this clause to provide a structure capable of serving for a finite period under static and repeated or cyclic loads. Design constraints, except those specifically related to welding and given in this clause, should be those of the applicable general specification.

Shear strengths of 4xxx and 5xxx fillers vary significantly. The designer should be aware of this. Shear strengths are given in the *Aluminum Design Manual*.

Allowable stresses differ for static and cyclically loaded structures. Other factors that determine allowable stress limits are:

type of stress

type of member or component

base metal alloy (both heat-treatable and work hardened)

filler alloy

joint design and stress categories (for cyclically loaded structures)

Below are some items that affect the mechanical properties of welded connections:

type of weld process and power supplies

extent of the HAZ and decreased weld strength

postweld heat treatment when applicable

joint design (stress risers)

## C-2.2 Drawings

The Engineer preparing contract design drawings cannot specify the depth of groove "S" without knowing the welding process and the position of welding. The code is explicit in stipulating that only the weld size "(E)" is to be specified on design drawings for PJP groove welds (see 2.2.4.1). This allows the Contractor to produce the weld size by assigning a depth of preparation to grooves shown on shop drawings as related to the chosen welding process and position of welding.



Copyright American Welding Society
Provided by IHS under license with AWS
No reproduction or networking permitted without license from IHS
Licensee=University of Texas Revised Sub Account/5620001114
Not for Resale, 08/29/2012 23:44:22 MDT

The root penetration will generally depend on the angle subtended at the root of the groove in combination with the root opening, the welding position, and the welding process.

## C-2.3 Groove Welds

**C-2.3.5 PJP.** Many welded aluminum structures contain partial joint penetration welds and some fabrications are impractical to produce with complete joint penetration welds. Therefore, the PJP welds are included in the code.

A PJP groove weld has an unwelded portion at the root of the weld. This condition may also exist with a groove weld in a single-welded joint without backing and with a groove weld in a double-welded joint without back-gouging. Therefore, the code places the same application limits on these welds as for PJP groove welds.

The unwelded portions are no more harmful than those in fillet welded joints. These unwelded portions constitute a significant stress concentration when fatigue loading is applied transversely to the joint.

However, when the load is applied longitudinally, there is no appreciable reduction in fatigue strength. Irrespective of the rules governing the service application of these particular groove welds, the eccentricity of shrinkage forces in relation to the center of gravity of the joint members will result in angular distortion on cooling after welding. This angular distortion can also result in secondary bending due to axial load acting through the shrinkage-induced eccentricity. Therefore, means shall be applied to restrain or preclude such rotation, both during fabrication and in service.

Statically loaded PJP groove welds, made from one side only, should be restrained to prevent localized rotation.

## C-2.5 Plug and Slot Welds

In making plug and slot welds, the following technique may be used.

For welds made in the flat and overhead positions, the arc is carried around the root of the joint and then carried along a spiral path to the center of the hole, fusing and depositing a layer of weld metal in the bottom of the hole. After the deposited layer has been cleaned, the arc is struck at the periphery of the hole and the procedure repeated, fusing and depositing successive layers to fill the hole to the required depth.

For welds made in the vertical position, the arc is struck at the root of the joint, at the lower side of the hole, and carried upward along a zig-zag path, depositing a layer about 3/16 in [5 mm] thick on the exposed surface of the inner member and fused to it and to the side of the hole. After cleaning the weld, additional layers are similarly deposited and cleaned to fill the hole to the required depth.



Copyright American Welding Society
Provided by IHS under license with AWS
No reproduction or networking permitted without license from IHS
Licensee=University of Texas Revised Sub Account/5620001114
Not for Resale, 08/29/2012 23:44:22 MDT

# C-3. Qualification

## *Part A*
## *General Requirements*

## C-3.1 General

All Contractors are responsible for their final product. Therefore, it is their responsibility to comply with the qualification requirements of the code relative to WPSs, welders, welding operators and tack welders. Properly documented WPSs and personnel qualification tests conducted by the Contractor in conformance with this code are generally acceptable to the Engineer for the contract.

Many aluminum alloys used in structural applications are heat-treatable. During welding, certain areas of the HAZ are subjected to temperatures that cause a partial annealing of the base metal. The extent of this partial annealing is dependent upon the welding conditions affecting the heat input. Thus, these variations in heat input can drastically alter the load carrying capacity of the welded structures. Therefore, all WPSs approved for use under this code shall be qualified by test. The Engineer is encouraged to accept properly documented evidence of previously qualified WPSs.

## C-3.2 Qualification of WPSs

**C-3.2.2 Unlisted Material.** When an alloy not listed is considered for use, a special welding investigation is required to confirm the weldability of a specific composition and heat-treated or work-hardened condition.

## C-3.3 Qualification of Welders, Welding Operators, and Tack Welders

**C-3.3.1** Welders, welding operators, and tack welders should have a minimum of three months of successful experience welding on aluminum alloys. In lieu of such experience, they should be instructed in the welding of aluminum and its alloys.

Since tack welds become a part of the final weld, the importance of tack welders receiving instruction in welding aluminum is stressed.

## *Part B*
## *Types of Tests, Test Methods, and Acceptance Criteria*

The types of tests, test methods, and acceptance criteria for each specific requirement are found in this part of the code. It alerts the user to the types of tests required for WPS and performance qualification and to see the types and limits of discontinuities that each type of test is designed to detect.

## C-3.5 Types and Purposes of Tests

This clause describes tests, the WPSs for conducting them, and the basis for acceptance. Tables 3.4, 3.5, and 3.6 describe the number, type, and range of thicknesses for CJP groove, PJP groove, and fillet welds, respectively.

## C-3.8 Bend Tests—Groove Welds—Plate and Pipe

Because of significant variations in as-welded mechanical properties of some aluminum alloys, the wrap-around bend test method (see Figure 3.13) is the preferred method of bend testing aluminum weldments. The plunger test method is an alternative method; however, it may prove unsuitable for some base alloy-filler alloy combinations addressed in this code.



Copyright American Welding Society
Provided by IHS under license with AWS
No reproduction or networking permitted without license from IHS
Licensee=University of Texas Revised Sub Account/5620001114
Not for Resale, 08/29/2012 23:44:22 MDT

## *Part C*
## *WPS Qualification*

This part sets forth the requirements for qualifying a WPS. The code recognizes that the approved aluminum alloys are weldable and that certain conditions are applicable to many of them.

## C-3.13 Limits of Qualified Positions for WPSs

Table 3.3 summarizes the requirements for the positions that are qualified by each qualification test. The test positions qualified are based on the experience and skill required to make a welded joint.

## C-3.14 Limitation of Variables—WPS Qualification

Some degree of deviation from the variables stated in the PQR is recognized in the WPS as acceptable without requiring verification. Deviations from a WPS that do affect predictable results are referred to as essential variables and are considered to be items that will affect the mechanical or chemical properties, or both, of the weldment. The limits set forth in Table 3.1 in this clause are based on the combined experience of the members of the subcommittee on welded aluminum structures.

## C-3.15 Tests—WPS Qualifications

**C-3.15.4 Test Specimens: Number, Type, and Preparation.** Tables 3.4, 3.5, and 3.6 summarize the requirements for the number and type of test specimens and the range of thickness qualified. A test weld plate thickness of 1 in [25 mm] or over qualifies a WPS for unlimited maximum thickness. The 1 in [25 mm] thickness has been shown generally to reflect the influence of weld metal chemical composition, heat input, and preheat and interpass temperature on the weld metal and HAZ properties.

Tables 3.4, 3.5, and 3.6 summarize the WPS qualifications for (A) CJP groove welds, (B) PJP groove welds, and (C) fillet welds.

The WPS qualification for pipe and tubing is divided into Class I and Class II structures based on the criteria outlined in Clause 2 of the code. Class I structures deal with the welding of castings, and provisions are made in these tables to qualify these WPSs. Conditions for large diameter job-size pipe or tubing are found in the section of the tables dealing with the Class II tubular structures.

All PJP groove welds and all test weld plates with fillet welds (except Option No. 2) require a macroetch test to determine the weld size of the weld being tested.

**C-3.15.5.2(2)** When a previously qualified CJP groove weld WPS is used on a PJP groove WPS, it is only necessary to perform the macroetch test required in Table 3.5, since the CJP groove WPS has met the mechanical property requirements when qualified. The PQR should reference the original PQR that contains the mechanical test data with a note to the effect that a previously qualified CJP groove weld PQR is used.

## *Part D*
## *Performance Qualification*

## C-3.17 General

The welder, welding operator, or tack welder qualification test is specifically designed to determine the ability to produce sound welds in any given test weld. After successfully completing the performance qualification tests, the welder, welding operator, or tack welder should be considered to have minimum acceptable competence.

Knowledge of the base metal is beneficial to welders, welding operators, or tack welders in producing a sound weldment; therefore, it is recommended that before welding aluminum wrought alloys or aluminum castings, welders, welding operators, or tack welders be given instructions as to the properties of these base metals, except where they have had prior experience in welding aluminum products.

## C-3.20 Essential Variables

The ability of a welder to produce a sound weld is considered by the code to be dependent on certain essential variables.

Table 3.8 lists the number and type of specimens and range of thickness qualified for welder and welding operator qualification. Performance qualification for pipe and tubing is divided into Class I and Class II structures. Tack welders qualify by performing one of the designated fillet weld tests.

## C-3.22 Retests

If a specimen from the test weld fails a specific test, an immediate testing of two additional specimens from the same test weld or an additional test weld is allowed under the code. If it is apparent that additional training is necessary, a complete retest at such time as this training has been accomplished is allowed by the code.



Copyright American Welding Society
Provided by IHS under license with AWS
No reproduction or networking permitted without license from IHS
Licensee=University of Texas Revised Sub Account/5620001114
Not for Resale, 08/29/2012 23:44:22 MDT

# C-4. Fabrication

## C-4.1 Processes

Certain GMAW and GTAW WPSs in conjunction with certain related types of joints have a long record of proven satisfaction performance. These WPSs and joints are designated as recommended; they may not be used without tests or qualification (see Clause 3).

The processes covered by the code are limited to (1) the gas metal arc welding (GMAW) process, (2) the gas tungsten arc welding (GTAW) process, (3) the plasma arc welding process using variable polarity (PAW-VP), and (4) stud welding (SW).

## C-4.2 Base Metal

Recommended combinations of base metals and filler metals are shown in Table 4.2.

**C-4.2.1 Specifications.** ANSI H35.2 provides dimensional tolerances. Base metal used for structural applications is usually furnished based on these requirements. The Engineer should recognize this, and any special dimensional requirements should be specified in the contract documents. Selection of the alloy or alloys to be used will be dependent on the type of structure to be constructed, design considerations, and the characteristics of the various alloys, e.g., weldability, corrosion resistance, strength, etc. For nonheat-treatable alloys, the transverse ultimate tensile strength of a welded joint is independent of the original temper or condition of the material. Hence, the tensile strength of a welded joint is generally equal to the strength of the metal in the annealed condition, and the WPS qualification requirements are based on this property.

For heat-treatable alloys, the transverse ultimate tensile strength of a welded joint will depend on the welding process and the heat input per pass. Generally, the tensile strength of a welded joint in heat-treatable material is greater that the tensile strength of the material in the annealed condition, hence, the WPS qualification requirements are developed from test data.

## C-4.3 Filler Metal

The user should be aware of the material properties of alloys that may require special welding practices and techniques to achieve published properties.

**C-4.3.2 Grouping.** These group designations do not imply that filler metals within the same F number groups may be interchanged without consideration of compatibility from the standpoints of metallurgical and mechanical properties, design and service requirements.

## C-4.8 Preheat and Interpass Temperatures

Preheating is sometimes used for welding thick aluminum sections to avoid cold-start discontinuities, to achieve heat balance with dissimilar thicknesses, or to remove moisture.

## C-4.9 Welding Environment

A heated structure or shelter may be used to protect the welder and the area being welded from inclement weather conditions. The environmental conditions inside the structure or shelter do not alter the preheat or interpass temperature requirements for base metals stated elsewhere in the code.

## C-4.11 Preparation of Base Metal

**C-4.11.1 Edges.** Oiled materials should be degreased either chemically or with an approved solvent. Caution should be exercised in the use of flammable solvents. The health and safety concerns attendant upon the use of



Copyright American Welding Society
Provided by IHS under license with AWS
No reproduction or networking permitted without license from IHS
Licensee=University of Texas Revised Sub Account/5620001114
Not for Resale, 08/29/2012 23:44:22 MDT

flammable solvents and caustic chemicals should be recognized (see ANSI Z49.1).

Degreasing should be followed by scratch brushing of surfaces to be welded with a hand or power driven stainless steel brush to ensure thick aluminum oxide is removed. In multi-pass welds wire brushing between passes may be necessary. Brushes used for this purpose should be kept clean and exclusively for use with aluminum. The interval between cleaning of the joint and welding should be as short as possible. If contamination with dirt or moisture occurs after cleaning and prior to welding, joint should be recleaned. Thick aluminum oxide should be removed either mechanically (power-driven stainless steel brush, grinding, scraping, or other approved method) or by chemical methods.

**C-4.11.2 Grinding.** Grinding of aluminum for edge preparation is generally not recommended; however, the code recognizes that it is necessary in some instances. In these instances, care must be taken not to contaminate the base metal by embedding abrasive particles in the aluminum surface.

**C-4.11.3 Plasma Arc Cut Edges.** Plasma arc cuts as described in this subclause have been successfully used for many years. The most common application is for cutting handhold openings for luminaire supports. Other successful applications include cutting for connections of intersecting tubes for cantilever sign support structures. For this reason, the Committee agreed that plasma arc cutting would be permissible for Class I structures.

**C-4.11.4 Visual Inspection and Repair of Cut Edges.** The repair procedures for discontinuities in plate cut edges may not be adequate where tension is applied in the through-thickness direction of the base metal. For other directions of loading, this article allows some lamination-type discontinuities in the base metal. Experience and tests have shown that laminations parallel to the direction of tensile stresses do not generally adversely affect the load-carrying capacity of a structural member.

**C-4.11.6 Reentrant Corners.** In buildings and tubular structures, the code allows a smaller reentrant corner radius than is acceptable for bridges. The smaller radius is necessary for some standard bolted or riveted connections. The unacceptable condition defined in the last sentence of 4.11.6 is illustrated in Figure C-4.1.

## C-4.12 Assembly

**C-4.12.1.1 Flat Part Alignment.** Typical sketches of the application of the alignment requirements for abutting parts to be joined by welds in butt joints are shown in Figures C-4.2 and C-4.3.

**C-4.12.2 Fillet Welds.** Except for the root opening in lap joints and the separation between a backing and base metal, a root opening of 1/16 in [2 mm] maximum is permitted for fillet welding base metal not exceeding 3 in [75 mm] in thickness. For base metal over 3 in [75 mm], the maximum permissible root opening is 5/16 in [8 mm]. These root openings are necessitated by the allowable mill tolerances and inability to bring thick parts into closer alignment. The code presupposes straightening of members prior to assembly or an application of an external load mechanism to force and keep the members in alignment during assembly.

The root openings may require backing, either as a backing weld or other types of backing capable of supporting molten weld metal. It should be realized that upon release of any external jacking loads, additional stresses may act upon the welds. Any root opening 1/16 in [2 mm] or greater requires an increase in size of the fillet weld leg size by the size of the root opening.

## C-4.13 Technique

When gas metal arc welding (GMAW), it is recommended that the current and voltage be such that the arc is in the spray or pulsed spray transfer mode. If the arc voltage is in the spray transfer range and the welding current is decreased below some threshold value, metal transfer will change from spray to globular transfer. If the arc voltage (length) is decreased significantly with adequate current, short circuiting transfer will occur. Both globular and short-circuit metal transfers are not recommended for aluminum welding because of potential problems with incomplete fusion and excessive porosity.

The progression of all passes of vertical position welding is typically upwards. Welding of aluminum in the vertical downward position is not recommended because of the potential problem associated with incomplete fusion and excessive porosity. However, undercut may be successfully repaired by welding vertically downward in the spray transfer mode.

## C-4.14 Tack and Temporary Welds

**C-4.14.2 Temporary Welds.** Because of the effects of heat on the aluminum structural alloys, it is essential that temporary welds not incorporated in final welds be identified and approved by the Engineer.



Copyright American Welding Society
Provided by IHS under license with AWS
No reproduction or networking permitted without license from IHS
Licensee=University of Texas Revised Sub Account/5620001114
Not for Resale, 08/29/2012 23:44:22 MDT

## C-4.15 Dimensional Tolerances for Welded Members

**C-4.15.3 Beam Camber.** The cambering of structural members is used to eliminate the appearance of sagging or to match elevation of adjacent building components when the member is fully loaded.

**C-4.15.5 Flange Warpage and Tilt.** The combined warpage and tilt of the flange of welded beams and girders is measured, as shown in Figure C-4.4.

## C-4.16 Arc Strikes

Arc strikes result in heating and very rapid cooling. When located outside the intended weld area, they may result in localized cracking and may serve as potential sites for initiating fracture.

## C-4.17 Weld Termination

**C-4.17.1 General.** Starting and stopping welds shall be accomplished using extension bars or run-on and run-off plates whenever possible.

## C-4.18 Control of Distortion and Shrinkage

**C-4.18.1 Sequence.** Joints expected to have significant shrinkage should usually be welded before joints expected to have lesser shrinkage.

**C-4.18.4 Corrections.** Localized heating to correct dimensional discrepancies by heat-shrinking is not recommended for aluminum structures.

## C-4.20 Repairs

**C-4.20.3 Options.** The code allows the Contractor to either repair or remove and replace an unacceptable weld. It is not the intent of the code to give the Inspector authority to specify the mode of correction.

## C-4.24 Postweld Heat Treatment

In aluminum, heating after welding is usually done not to relieve stresses, but rather to heat treat the material to regain strength lost by welding. Nonheat-treatable alloys can be thermally stress relieved effectively. The heat-treatable aluminum alloys are not suitable for thermal stress-relief treatment. For further information the Engineer is referred to *Welding Aluminum: Theory and Practice*, Aluminum Association (see Annex A).



Copyright American Welding Society
Provided by IHS under license with AWS
No reproduction or networking permitted without license from IHS
Licensee=University of Texas Revised Sub Account/5620001114
Not for Resale, 08/29/2012 23:44:22 MDT

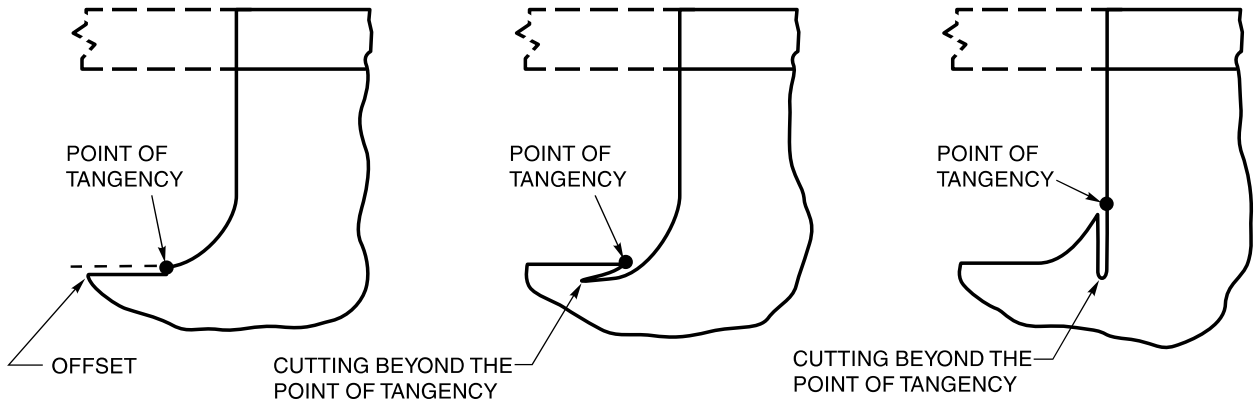


Note: Any cutting beyond the point of tangency is unacceptable.

**Figure C-4.1—Examples of Unacceptable Cutting Beyond the Point of Tangency (see C-4.11.6)**

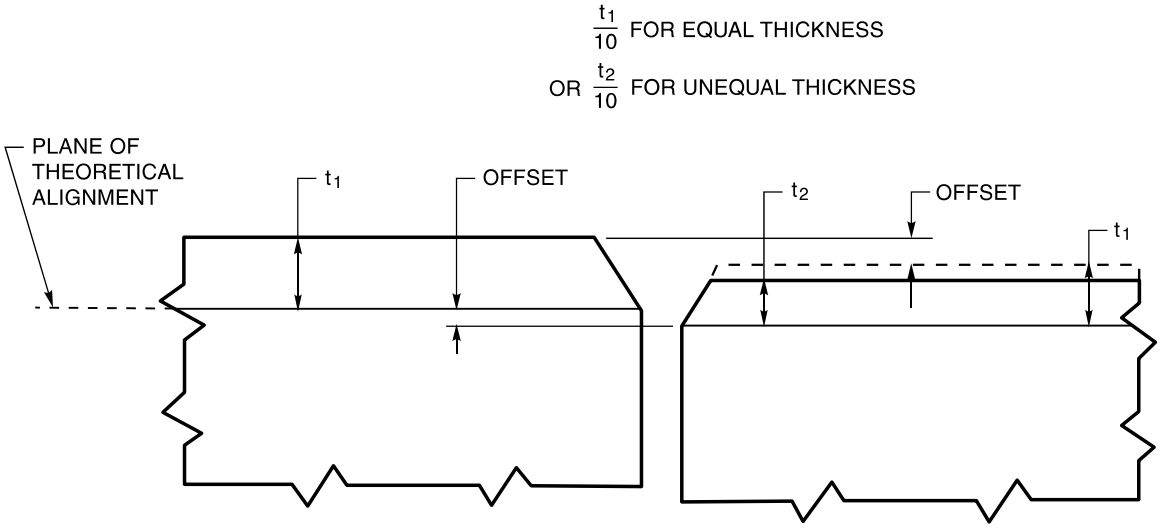


Note: An offset not exceeding 10% of the thickness of the thinner part joined, but in no case more than 1/8 in [3 mm] may be allowed as a departure from the theoretical alignment (see C-4.12.1.1).

**Figure C-4.2—Permissible Offset in Abutting Members (see C-4.12.1.1)**



Copyright American Welding Society
Provided by IHS under license with AWS
No reproduction or networking permitted without license from IHS
Licensee=University of Texas Revised Sub Account/5620001114
Not for Resale, 08/29/2012 23:44:22 MDT

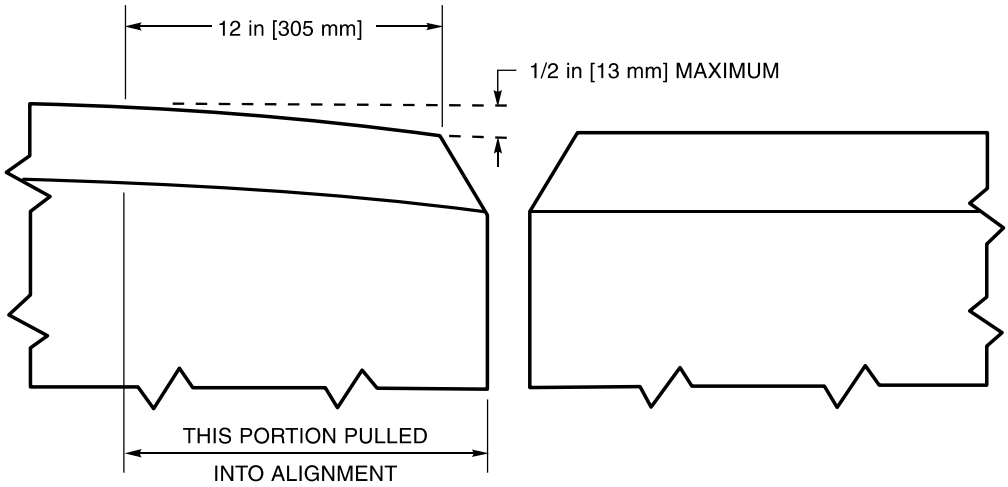


**Figure C-4.3—Correction of Misaligned Members (see C-4.12.1.1)**

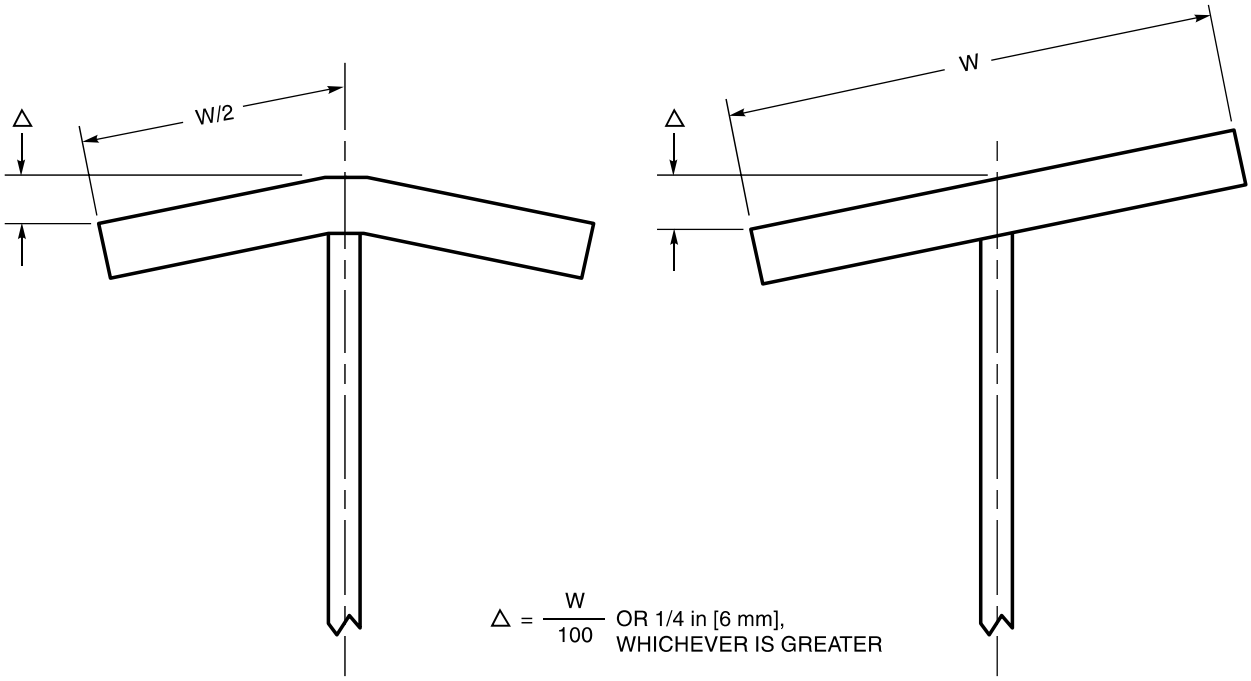


**Figure C-4.4—Measurement of Flange Warpage and Tilt (see C-4.15.5)**



Copyright American Welding Society
Provided by IHS under license with AWS
No reproduction or networking permitted without license from IHS
Licensee=University of Texas Revised Sub Account/5620001114
Not for Resale, 08/29/2012 23:44:22 MDT

This page is intentionally blank.



Copyright American Welding Society
Provided by IHS under license with AWS
No reproduction or networking permitted without license from IHS
Licensee=University of Texas Revised Sub Account/5620001114
Not for Resale, 08/29/2012 23:44:22 MDT

# C-5. Inspection

## *Part A*
## *General Requirements*

AWS D1.2/D1.2M:2008 parallels the AWS D1.1/D1.1M on the basic premise of contractual obligations when providing products and services. Those who submit competitive bids or otherwise enter into a contract to provide materials and workmanship for structural weldments in conformance with the provisions of the code assume an obligation to furnish the products as specified in the contract documents and are fully responsible for product quality.

## C-5.1 General

In this clause, the term fabrication/erection inspection is separated from verification inspection. These broader terms are used to avoid confusion with the terms quality control and quality assurance as used by some industries (e.g., nuclear). It was advantageous to use more general terms that place greater emphasis on timely inspection. The Contractor is solely responsible for the ordering of materials, and assembly and welding of the structural weldments.

**C-5.1.1** This subclause describes the responsibility of the Contractor for fabrication/erection inspection and testing, which is basically the quality control responsibility described in other contract documents. The Owner has the right, but generally not the responsibility, to provide independent inspection to verify that the product meets specified requirements. This inspection may be done independently by the Owner or the Owner's representative or, when provided in the contract, verification inspection may be waived or it may be stipulated that the Contractor shall perform both the inspection and the verification. When this is done, fabrication/erection inspection (quality control) and verification inspection (quality assurance) remain separate functions. Verification inspection should be performed independently by personnel whose primary responsibility is not production inspection.

## C-5.2 Inspection of Materials

This code provision is all-encompassing. It requires inspection of materials and review of materials certification and mill test reports. It is important that this work be done in a timely manner so that unacceptable materials are not used or incorporated in the work.

## C-5.3 Inspection of WPS Qualification and Equipment

The requirements of 5.3.1 and 5.3.2, should be completed before welding is begun on weldments required by the contract documents. Qualification for each weldment should always be done before welding is started, but qualification for all weldments does not have to be completed before welding with qualified WPSs can be started.

## C-5.4 Inspection of Welder, Welding Operator, and Tack Welder Qualifications

**C-5.4.1** It is important that the Inspector determine that all welders are qualified before they begin welding on the project. If discovered after welding has begun, lack of welder qualification documentation may cause serious delays in the acceptance of weldments.

**C-5.4.2** The Inspector shall regularly appraise the quality of welds produced by welders, welding operators, and tack welders. Individuals producing unacceptable welds should be required to produce satisfactory test welds of the type causing difficulties. Complete requalification



Copyright American Welding Society
Provided by IHS under license with AWS
No reproduction or networking permitted without license from IHS
Licensee=University of Texas Revised Sub Account/5620001114
Not for Resale, 08/29/2012 23:44:22 MDT

may not always be necessary. Only qualified welders producing acceptable welds shall be employed in the work.

**C-5.4.3** Welders who cannot provide evidence that they have used the welding process for which they were qualified within the preceding six months are required to take appropriate tests to become requalified. Since active welders can maintain certification as long as they continue to do good work, it is essential that the Inspector regularly evaluate the quality of the welds produced by each welder, welding operator, and tack welder.

## C-5.5 Inspection of Work and Records

The Inspector shall determine from inspection of the work prior to assembly, during assembly, during welding, and after welding that all requirements of the code are met (see 5.1.1). Inspectors shall identify the work they have inspected and accepted or rejected. The method of identification should not be destructive to the weldment. Die stamping of welds is not recommended, since die stamp indentations may form sites for crack initiation. It is essential that Inspectors keep accurate records documenting their basis for accepting or rejecting weldments.

## C-5.6 Obligation of the Contractor

**C-5.6.1** The Contractor is responsible for product acceptability. The Contractor shall conduct inspection to the extent necessary to ensure conformance with the code, except as provided in 5.6.5.

**C-5.6.2** If the verification Inspector finds deficiencies in materials and workmanship, regardless of whether the Verification Inspector is a representative of the Owner or an employee of the Contractor, the Contractor shall be responsible for all necessary repairs or replacements.

**C-5.6.4 and C-5.6.5** When NDT is specified in the contract documents, the Contractor shall take necessary steps to ensure that the NDT acceptance criteria prescribed by the code are met. When NDT other than visual inspection is not specified, the Owner shall be responsible for all associated costs of testing and surface preparation plus the repair of discontinuities not reasonably expected to be discovered during visual inspection.

## C-5.7 NDT

In addition to visual inspection, which is always necessary to achieve compliance with code requirements, three nondestructive testing (NDT) methods are provided for in the code. They are (1) radiographic testing (RT), (2) ultrasonic testing (UT), and (3) liquid penetrant testing (PT). RT and UT are used to detect both surface and internal discontinuities. PT is used to detect discontinuities open to the surface. Other NDT methods may be used upon agreement between Owner and Contractor.

**C-5.7.1** It is essential that the Contractor know in advance the categories of welds that will be subject to NDT, the testing procedure to be used, and the level of acceptance. Unless otherwise provided in the contract, the quality criteria for the acceptance of welds are stated in 5.14.

It is not necessary to write in the contract documents exactly which weld or what portions of specific welds will be examined by a specific test method. A general description of weld test requirements may be specified, e.g., "All welds in CJP butt joints in tension flanges of girders shall be radiographed."

If the location of tension flange butt joints is not obvious, their location should be designated on the plans.

When spot checking is specified, e.g., 10% of all fillet welds, it should not be taken to imply that the Contractor be notified prior to welding which specific welds or portion of welds shall be tested. It is a basic premise of the specifications that if spot tests are made, there should be a sufficient number of test locations to give a reliable indication of weld quality.

There are different acceptance criteria for statically loaded nontubular structures, cyclically loaded nontubular structures, and tubular structures. The basic difference in acceptance criteria for each of these structures is based upon the difference between static and cyclic loading.

When fatigue crack growth is anticipated, acceptable initial weld flaw sizes must of necessity be small. All criteria are established in an attempt to preclude weld failure during the anticipated service life of the weldment.

**C-5.7.6 Personnel Qualification.** Only individuals who qualify to SNT-TC-1A NDT Level II may perform NDT without supervision. Level III individuals may also perform NDT tests, provided they meet the requirements of NDT Level II.

NDT Level III engineers and technicians are generally supervisors and may not be actively engaged in the actual work of testing. Since there is no performance



Copyright American Welding Society
Provided by IHS under license with AWS
No reproduction or networking permitted without license from IHS
Licensee=University of Texas Revised Sub Account/5620001114
Not for Resale, 08/29/2012 23:44:22 MDT

qualification test for individuals qualified to NDT Level III, all individuals providing testing services under the code shall be qualified to Level II, which has specific performance qualification requirements.

## C-5.8 Extent of Testing

**C-5.8.1** It is important that joints to be tested by NDT be clearly described in the contract documents as explained in Part A of this commentary.

## *Part B Radiographic Testing of Groove Welds in Butt Joints*

## C-5.9 General

**C-5.9.1** The procedures and standards set forth in this clause are primarily designed for RT of CJP groove welds. Typical geometries for structural welds and design requirements for these structures were taken into account in the preparation of the specification.

## C-5.10 RT Procedures

**C-5.10.1** A single source of radiation is specified to avoid confusion or blurring of the radiographic image. Radiographic sensitivity is judged solely on the quality of the image quality indicator (IQI) image(s), as specified in both ASTM and ASME standard provisions.

**C-5.10.2** Ionizing radiation and chemicals used in RT can present serious health hazards. All safety regulations must be complied with.

**C-5.10.3** When the Owner wishes weld surfaces to be ground flush or otherwise smoothed in preparation for RT, it should be so stated in the contract documents. The Owner and the Contractor should attempt to agree in advance on which weld surface irregularities will not need to be ground unless surface irregularities interfere with interpretation of the radiograph. It is extremely difficult and often impossible to separate internal discontinuities from surface discontinuities when reviewing radiographs in the absence of information describing the weld surface. When agreement can be reached on weld surface preparation prior to RT, rejections and delays will generally be reduced.

**C-5.10.3.1** Weld tabs (extension bars and run-off plates) are generally removed prior to RT so that the radiograph will represent the weld as finished and placed in service. Contraction cracks are commonly found in the weld at the interface between weld tabs and the edge of the plate or shape joined by the weld. These cracks are hard to identify in the radiograph under the best conditions. It is considered necessary to remove the weld tabs before attempting to radiograph the boundaries of the welded joint.

**C-5.10.3.3** When weld reinforcement or backing, or both, are not removed, shims placed under the IQIs are required so that the IQI image may be evaluated on the average total thickness of aluminum (weld metal, backing, reinforcement) exposed to radiation.

**C-5.10.4** Provisions of this clause are to assure the use of fine grain film and to avoid coarseness in the image that may result from the use of fluorescent screens.

**C-5.10.5** The source of radiation is centered with respect to the portion of the weld being examined to avoid as much geometric distortion as possible.

**C-5.10.5.1** This subclause is provided to limit geometric unsharpness that causes distortion and blurring of the radiographic image. Geometric unsharpness is defined as a blurring of the edges of a radiographic image due to the radiation source having finite dimensions, dependent on relative source-to-film and object-to-film distances. Geometric unsharpness may be expressed mathematically as: $U_g = F(L_i - L_o)/L_o$, where $U_g$ is the geometric unsharpness, F is the size of the X-ray tube focal spot or the diameter of the gamma source, $L_i$ is the source-to-film distance, $L_o$ is the source-to-object distance, and $L_i - L_o$ is the object-to-film distance.

**C-5.10.5.2 and C5.10.5.3** These clauses are intended to limit geometric distortion of the object as shown in the radiograph. An exception is made for panoramic exposures.

**C-5.10.6** The maximum permissible voltage for RT depends on the material thickness, when X-ray units are used. These units may be used on all RT, provided they have adequate penetrating ability.

Aluminum has a lower radiographic density than steel, and the resulting poor radiation contrast and sensitivity with isotope sources limit their use. Iridium 192 is approved as a radiographic source only when aluminum exceeds 2.5 in [65 mm] thickness. Cobalt 60 is not an approved source.

Care should be taken to ensure that the effective size of the radiograph source is small enough to preclude excessive geometric unsharpness.

**C-5.10.7, C-5.10.7.1, C-5.10.7.2 and C-5.10.7.3** Since radiographic sensitivity and the acceptability of radiographs are based upon the image of the required IQIs,



Copyright American Welding Society
Provided by IHS under license with AWS
No reproduction or networking permitted without license from IHS
Licensee=University of Texas Revised Sub Account/5620001114
Not for Resale, 08/29/2012 23:44:22 MDT

care is taken in describing the manufacture and use of the required IQIs. IQIs are placed as shown in Figures 5.1, 5.2, 5.3 and 5.4.

IQIs may be placed only on the source side, unless otherwise approved by the Engineer. Failure to place the IQIs on the source side during the radiographic exposure, without prior approval of the Engineer, shall be cause for rejection of the radiographs.

**C-5.10.8** Welds shall be radiographed and the film indexed by methods that will ensure continuous inspection of the weld within the limits specified.

**C-5.10.8.1** Backscattered radiation can cause general fogging and produce artifacts in the radiograph. The method described in this clause will identify backscattered radiation so that corrective steps can be taken.

**C-5.10.9** RT is designed to inspect all of the weld zone. Defects in the weld metal or the adjacent HAZs can produce weld failure. Film widths shall be sufficient to inspect all portions of the weld joint and have sufficient room for weld identification.

**C-5.10.10** Quality radiographs with the appropriate IQI sensitivity are the only indicators of proper RT.

**C-5.10.11 Density Limitations.** It is the intent of the specification to use radiographic films within the full limits of the useful film density. An effort is made in this code to avoid the necessity of making multiple exposures or using films of more than one exposure speed when examining welded joints expected to be routinely encountered.

**C-5.10.12** This clause describes all information required to identify the radiograph and also provides methods for matching the radiograph to the weld joint, so that weld repairs, when necessary, may be made without repetitive or unnecessary metal removal. Radiograph identification marks and location identification marks shall be used to locate defects and to verify that unacceptable discontinuities have been repaired as demonstrated by the subsequent radiograph of the repair.

## C-5.12 Examination, Report, and Disposition of Radiographs

**C-5.12.2** Since more accurate film viewing is possible when the eyes of the viewer are not subjected to light from portions of the radiograph not under examination, a suitable, variable intensity illuminator with spot review or masked spot review capability is required. The ability to adjust the light intensity reduces eye discomfort and enhances visibility of weld discontinuities. Subdued light in the viewing area allows the reviewer's eyes to adjust to see small discontinuities in the radiographic image. Film review in complete darkness is not advisable since the contrast between darkness and the intense light from portions of the radiograph with low density causes discomfort and loss of accuracy.

Film densities within the range of 2.5 to 3.5, as described in 5.10.11, are preferred. The illuminator shall have sufficient capacity to properly illuminate radiographs with densities up to 4.0. In general, within the limits of density approved by the code, the greater the film density, the greater the radiographic sensitivity.

**C-5.12.3 and C-5.12.4** After the RT technician and the fabrication/erection Inspector have reviewed and approved both the radiographs and the report interpreting them, the RT report shall be submitted to the Verification Inspector for a separate review on behalf of the Owner. All radiographs, and reports, including those showing unacceptable quality prior to repair, shall, unless otherwise provided in the contract documents, become the property of the Owner. The Contractor shall not discard radiographs or reports under the provisions of the code until the Owner has been given, and has acknowledged, prior notice in writing.

The term *a full set of radiographs* as used in 5.12.4 means one radiograph of acceptable weld quality from each radiographic exposure required for complete RT, plus one radiograph of any unacceptable weld quality prior to repair from each radiographic exposure. If the Contractor elects to load more than one film in each cassette to produce an extra radiograph for the Contractor's own use or to avoid possible delays due to film artifacts, the extra radiographs are, unless otherwise specified, the property of the Contractor.

# *Part C*
# *Ultrasonic Testing of Groove Welds*

## C-5.13 General

Ultrasonic testing (UT) of aluminum weldments is recognized as an acceptable NDT method. UT is regularly being used on aluminum welds to provide information about the location, size, and orientation of discontinuities.

This method is not treated in detail in the code because of the lack of consensus, at this time, about formulating a simple procedure giving satisfactory results.

**C-5.13.1** When UT is included in the contract documents, not only the extent of testing, but also the testing procedures and the acceptance criteria shall be specified.



Copyright American Welding Society
Provided by IHS under license with AWS
No reproduction or networking permitted without license from IHS
Licensee=University of Texas Revised Sub Account/5620001114
Not for Resale, 08/29/2012 23:44:22 MDT

There are existing standards and codes that provide applicable information for UT. These include: ASTM E 164, *Standard Recommended Practice for Ultrasonic Contact Examination of Weldments*; and Section V of *ASME Boiler and Pressure Vessel Code, Non-Destructive Examination*.

**C-5.13.2** The provisions for maintaining and retaining records on welds subjected to UT parallel those for RT. Likewise, unless otherwise specified in the contract documents, the records become the property of the Owner.

## C-5.14 Visual Inspection

Acceptance criteria for visual inspection is found in 4.19.



Copyright American Welding Society
Provided by IHS under license with AWS
No reproduction or networking permitted without license from IHS
Licensee=University of Texas Revised Sub Account/5620001114
Not for Resale, 08/29/2012 23:44:22 MDT

This page is intentionally blank.



Copyright American Welding Society
Provided by IHS under license with AWS
No reproduction or networking permitted without license from IHS

Licensee=University of Texas Revised Sub Account/5620001114
Not for Resale, 08/29/2012 23:44:22 MDT

# C-6. Stud Welding

## *Part A*
## *General Requirements*

## C-6.2 Material Requirements

Aluminum filler wire alloys have been developed for use with various base alloy materials so as to prevent the generation of toxic fumes when welding in poorly ventilated enclosures and to minimize weld cracking. Generation of toxic fumes is controlled by limiting beryllium content in the filler alloys to a maximum of 0.0008%. A grain refiner such as titanium is added to the filler alloys to minimize weld cracking by producing a finer grain structure in the as-cast weld. These features are also desirable when making stud welds.

Since the filler wire alloys are produced at wire and rod manufacturing facilities, they are also more readily available in the forms most desirable for stud manufacturing. For these reasons, the alloys shown in 6.10.1 are specified as aluminum stud base metal for arc stud welding. The capacitor discharge process takes place almost instantaneously so the need to control beryllium content is not so critical. Therefore, aluminum alloys, listed in 6.14.1, can be specified as a stud base metal. The Engineer should be familiar with the chemistry of other aluminum alloys before specifying other materials.

## C-6.3 Workmanship

The surface of the base metal must be smooth enough after a grinding or brushing operation so as not to adversely affect the welding results.

## C-6.4 Qualification Requirements

A WPS shall be prepared for each application. It shall be supported by a WPS that has been qualified by test. The code allows the qualification of a range of thicknesses under one WPS qualification by welding the maximum and minimum thicknesses of base material. The Contractor has the option of choosing a bend test only in lieu of making tension tests.

**C-6.4.5.8** Tension test values are given in the code for F-22 materials only. Other material tension test values may be obtained from the stud manufacturer or by testing. If one of the tension test options is specified in the WPS qualification test, then the minimum tensile values for the stud alloy being welded shall be supplied by the Engineer.

## C-6.5 Operator Preproduction Qualification

Stud welding equipment is usually considered automatic and therefore requires minimal expertise on the part of the operator. Basic skills such as loading the stud, applying the ferrule or a wetting agent and maintaining correct alignment of the stud welding gun can readily be determined at the time of welding. Such operator qualification doubles as the preproduction application testing of the stud welding process prior to starting the day's or shift's operation.

## C-6.6 Acceptance Criteria—Production Welds

Flash, as evidenced during inspection according to 6.6 is not a fillet weld such as those formed by conventional arc welding processes. The expelled metal, which is excess to the weld required for strength, is not detrimental but, on the contrary, is essential to provide evidence of a sound stud weld. The containment of this excess molten metal around an arc welded stud by the ferrule (arc shield) assists in securing sound fusion of the entire cross section of the stud base. The stud weld flash may



Copyright American Welding Society
Provided by IHS under license with AWS
No reproduction or networking permitted without license from IHS
Licensee=University of Texas Revised Sub Account/5620001114
Not for Resale, 08/29/2012 23:44:22 MDT

have nonfusion in its vertical leg and overlap on its horizontal leg, and it may contain occasional small shrink fissures or other discontinuities that usually form at the top of the flash with essentially radial, or longitudinal orientation, or both, to the axis of the stud. Such discontinuities are acceptable.

## C-6.7 Mislocated Studs

Mislocated studs are those studs which are applied to the wrong location of the structure. It is the Contractor's or stud applicator's responsibility to remove these mislocated studs from the structure and repair the area where the stud was applied to its original condition. The Engineer may approve leaving the mislocated stud attached to the structure.

## C-6.8 Repair of Misapplied Studs

Misapplication of studs usually is caused by foreign materials on the surface of the base material or a malfunction of the stud welding equipment. The latter may cause severe arcing on the surface of the base metal which may have to be repaired before another stud welding attempt is made. Once a stud has been used in an attempted arc stud weld, it is deemed as being unfit for use in production and shall be discarded

# *Part B*
# *Arc Stud Welding*

## C-6.12 Technique

The arc stud welding process requires precise setting of the welding conditions used to make the weld. As a starting point to developing these conditions, it is often advisable to rely on the recommendations of the stud or equipment manufacturer to supply base settings for the application being developed. More seasoned users may rely more on past practice to provide this same information.



Copyright American Welding Society
Provided by IHS under license with AWS
No reproduction or networking permitted without license from IHS
Licensee=University of Texas Revised Sub Account/5620001114
Not for Resale, 08/29/2012 23:44:22 MDT

# C-7. Strengthening and Repair of Existing Structures

## C-7.1 General

The extent of cross-sectional heating should be considered by the Engineer when determining whether cyclic stresses may be carried by the member during welding. The significance of this statement lies in the fact that the properties of heat-treated and work-hardened aluminum alloys are influenced by heat, and their weldability varies considerably.

## C-7.2 Base Metal

One essential requirement in strengthening and repairing existing structures is the identification of the base metal.

Obviously, when welding is anticipated, weldability of the aluminum alloys in the existing structure is of primary importance. Together with the mechanical properties of the base metal, it will provide information essential for establishment of safe and sound WPSs. Only then will realistic data be available for reliable cost estimates. Should poor weldability make such cost economically prohibitive, other means of joining should be considered by the Engineer.

Mechanical properties are normally determined by tension testing from a representative sample take from the existing structure.

If the chemical composition has to be established by test, then it will be advisable to take samples from the greater thicknesses as these are more indicative of the extremes in composition.

## C-7.3 Design

Repair and strengthening of existing structures differ from new construction inasmuch as the operations will need to be executed with the structure or the structural element under some condition of working stress.

There is presently little guidance with respect to welding of structural members under stress, hence each given situation shall be evaluated on its own merits, and sound engineering judgment must be exercised as to the optimum manner in which repair or strengthening should be accomplished. Economy is the obvious underlying consideration when deciding whether a member should be repaired or entirely replaced. However, the cost estimate supporting the decision to be made shall be related not only to material and labor, but also should include the returns from an uninterrupted use of the member or, conversely, the loss due to its time out of service. Generally, in the case of cyclically loaded structures, sufficient data regarding past service are not available to estimate the remaining fatigue life. If such is the case, an inspection program designed to locate possible fatigue cracks in stable growth prior to their becoming critical is a reasonable alternative.

The only practical methods of extending the expected fatigue life of a member in a given service is to reduce the stress or stress range, or to provide joint geometry less susceptible to fatigue failure.



Copyright American Welding Society
Provided by IHS under license with AWS
No reproduction or networking permitted without license from IHS

Licensee=University of Texas Revised Sub Account/5620001114
Not for Resale, 08/29/2012 23:44:22 MDT

This page is intentionally blank.



Copyright American Welding Society
Provided by IHS under license with AWS
No reproduction or networking permitted without license from IHS
Licensee=University of Texas Revised Sub Account/5620001114
Not for Resale, 08/29/2012 23:44:22 MDT

# Index

## A

AASHTO, 2.0, Annex A
Acceptability limits, 3.2, 4.11
Acceptance criteria
  alternate, 1.1.2
  bend tests, 3.8.3
  cut edges, 4.11.4
  dye-penetrant testing, 5.7.5, 5.17
  fillet welds, 3.6.3, 3.10.3, 3.15.9, 3.22.8
  groove welds, 3.6.2, 3.9.2, 3.15.8, 3.21.7
  radiography, 3.11.2, 5.11, 5.15.1–5.15.2
  tension tests, 3.7.3
  tubular structures, 5.14
  ultrasonic testing, 5.7.5, 5.13, 5.16
  visual, 3.6.2, 3.6.3, 5.14
Acidic etchant, Annex H
Alignment, 4.12.1.1
Allowable stresses, C2.1
Alloy groups, 3.2.1, Table 4.1
Alloys not listed, 3.2.2
Aluminum Association, Foreword, Annex A
Ambient temperature, 4.18.4
Annealing, 3.8.1.7
ANSI Specifications, Annex A
Anti-spatter compounds, 4.23
Approved alloys, Table 4.1
Arc strikes, 4.16
Argon, 4.5, 6.12.2, 6.15.2
ASME Boiler & Pressure Vessel Code, 5.10.5.1, Annex A
ASNT Recommended Practice, Annex A
Assembly, 4.12
Associated structural design codes, 7.3.1
ASTM Specifications, Annex A, Table 4.2

## B

Backgouging, 4.11.8
Backing, 2.2.4, 2.3.4, 2.3.5, 4.7
  copper, 4.7.4
  removal, 4.7.2, 5.10.3.2
Back scattered radiation, 5.10.8.3
Base metal, 4.2, Table 4.1
  groupings, 3.2.1
  inspection, 5.2
  preparation, 4.11.1, Annex B
  removal, 5.6.3
  repair, 4.20
  replacement, 5.6.3
  specifications, 3.2.1, 4.2.1
  surfaces, 4.11.1
  tensile strengths, Table 3.2
  unlisted alloys, 3.2.2
Basic etchant, Annex H
Beams
  camber, 4.15.3
  depth, 4.15.7
  filler plates, 2.6.1
  splice plates, 2.6.3
  straightness, 4.15.3
  warpage, 4.15.5
Bearing stiffeners, 4.15.8
Bend tests, 3.8
Bend jigs, Figs. 3.13–3.15, Fig. 6.1
Bidders, 5.6.4, 5.7.1
Bolts, 6.12.3
Box tubing, Fig. 3.22
Building commissioner, 1.2

## C

Camber, 4.15.3
Castings, 3.21.1(3), 3.21.2(3)
Ceramic, 4.7.4, 6.9.2
Certified Welding Inspectors, 5.1.3
Chemicals, safe handling, Annex H
Chipping, 4.11.1, 4.11.8
Class I structures, 2.0
Class II structures, 2.0
Cleaning, 4.11.1, 4.22, 6.3.1
  weld spatter, 4.22.2
Column straightness, 4.15.1
Complete joint penetration groove welds, 2.2.4.1, 2.3.2, 2.3.4, Table 3.3, Table 3.4, Table 3.9, Fig. B.1
Concavity, 3.6.2(7), 3.6.3(7), 4.20.5.2, Fig. 4.2
Contractor, 5.6
  obligations, 4.20.3–4.20.5, 3.21.3, 5.6, 5.12.4, 5.13.2
  responsibility, 3.1, 3.2.2, 3.12, 3.17.2, 3.17.4, 4.3.1, 4.5, 4.15.8, 4.18.1, 5.1.1, 6.2.3, 6.4.2
Convexity, 4.20.5.1, Fig. 4.2
Copes, 4.11.7
Copper backing, 4.7.4
Copper inclusions, 4.21
Corners, reentrant, 4.11.6
Corrosion repairs, 6.3.2
Cracks, 4.20.5.4
Craters, 4.20.5.2
Cut edges, 4.11.4
  discontinuities, Table 4.3, Fig. 4.1
Cut plate, Fig. 4.1
Cutting, plasma arc, 4.11.3
Cyclically load structures, nontubular
  See also structures
  allowable stress, 2.1
  base metal, 4.2
  bolted splices, 4.15.4
  combination of metals, C4.2
  dimensional tolerances, 4.15
  flatness of girder webs, 4.15.4
  girders, 4.15
  inspection, 5.14
  quality requirements, 5.14
  splices, 4.15.4
  stiffeners, 4.15.4
  temporary backing, 4.7.2
  temporary welds, 4.14.2
  web flatness, 4.15.4
  weld terminations, 4.17



Copyright American Welding Society
Provided by IHS under license with AWS
No reproduction or networking permitted without license from IHS
Licensee=University of Texas Revised Sub Account/5620001114
Not for Resale, 08/29/2012 23:44:22 MDT

## D

Damaged base metal, 5.6.3
Dead loads, 7.3.2
Dew point, 4.5,
Defective welds, 4.20
Definitions, 1.3, 3.17.1
Degreasing, 4.11.1, 6.3.1
Design of connections, 2
Diagrammatic welds, 2.4.1
Dimensional tolerances, 4.12, 4.15
Discontinuities, 3.8.3.2, 5.15.1.1
  acceptance criteria, 3.6.2, 3.6.3, 3.7.3, 3.8.3
  repair, 4.20
Disposition of radiographs, 5.12.4
Distortion
  control, 4.18
  drawings, 2.2.2
  straightening, 4.20.6
Drawings, 1.4, 2.2
Dye-penetrant examination, 3.6.1, 5.7.5
  acceptability of welds, 5.7.5, 5.11, 5.17
  contractor's obligation, 5.6
  developer, 4.20.5.4
  discontinuities, 3.6.1.2, 5.7.5
  extent of testing, 3.6.1.1
  procedure, 3.6.1.1, Annex H
  report form, Annex G

## E

Edge preparation, 4.11.1
Edge blocks, 5.10.13, Fig. 5.7
Effective throat, Annex E
  diagrammatic weld, 2.4.1
Effective weld area, 2.3, 2.4.3
Effective weld size, 2.3.2, 2.4.2.1
Effective weld length, 2.3.1, 2.4.2.2, 2.4.2.3
Electrodes, 4.3.1
  storage, 4.3.4
  tungsten, Annex K
  welder qualification groups, 4.3.2
Engineer, 1.2, 3.2.1, 4.3
Equipment, welding and cutting, 4.6
Essential variables, 3.1, 3.12, 3.12.1, 3.14, 3.17.3, Table 3.1, Table 3.9
Etching of specimens, Annex H
Exfoliation, 4.18.4.2
Existing structures, 7
  cyclic loading, 7.3.3
  dead load, 7.3.2
  design, 7.3
  fatigue stresses, 7.3.3
  live load, 7.3.2
  repair, 7.3.4, 7.4
  strengthening, 7.1
  welding sequence, 2.2.2, 4.18.1
Extension bars, 4.17.2

## F

F-numbers, 4.3.2
Fabricator, see Contractor
Face bend test, 3.8.1.2, 3.8.1.5, 3.8.2.2, Fig. 3.11, Fig. 3.12
Fatigue, 4.17.4, 7.3.3
Faying surfaces, fit-up, 2.5, 4.12.3
Fill pass thickness, Table 4.4
Filler metals, 4.3
  recommended alloys, Table 4.2
  storage, 4.3.4
  welder group designation, 4.3.2
Filler plates, 2.6, 4.12.3, 3.17.2, Fig. 2.2, Fig. 2.3
Fillet welds, 2.4, 2.4.3, 3.4.1.3, 3.4.1.4, 3.5.2.5, 3.6.1, 3.6.3, 3.10, 3.15.1(5), 3.15.9, 4.7.3, 4.11.7, 4.12.1.3, 4.12.2, 4.17.5, 4.19.1, Fig. 3.2, Fig. 3.5, Fig. 3.6
  concavity, Fig. 4.2
  convexity, Fig. 4.2
  details, 2.4
  effective area, 2.4.3
  effective length, 2.4.2.1–2.4.2.3
  effective throat, 2.4.1
  in holes, 2.4.4.3
  macroetch test for, 3.15.8.4, Annex H, Table 3.4, Table 3.5
  maximum size, GMAW, 2.4.4.4
  pipe test, 3.6.3, 3.10.2.1, 3.10.3.1
  plate test, 3.6.3, 3.10.2.1, 3.10.2.2, 3.10.3.1, 3.10.3.2
  profiles, 3.6, Fig. 4.2
  size, Table 4.4
  skewed joints, 2.6.5, Fig. 2.1
  soundness tests, 3.10, Figs. 3.17–3.19
  tests, 3.6.3, 3.10, 3.15.2, 3.21.2
  undercut, Fig. 4.2
  undersize, Fig. 4.2
Fixtures, 4.12.5
Flanges, warpage, 4.15.5
Forms, welding data, Annex F
Fracture tests, 3.5.2.3, 3.15.8.5, Fig. 3.16
Full section tension specimen, Fig. 3.9

## G

Gas metal arc welding, 2.3.5, 4.1(1), Fig. B.4
  annealing, 3.8.1.7
  arc strikes, 4.16
  backing, 4.7, 4.12.1.3
  cleaning, 4.11.1, 4.22, 6.3.1
  electrodes, 4.3.1, Table 4.2
  inclusions, copper, 4.21
  interpass temperature, 4.8, Table 3.1
  preheat, 3.12.2, 4.8, 4.18.4, Table 3.1
  procedure qualification, 3.1, 3.12.1, 6.4
  protection, 1.5, Annex J
  shielding gas, 4.5, 6.4.4(5), 6.4.4(6), 6.12.1, 6.12.2, 6.13.4, 6.15.2, Table 3.1, Table 3.9
  weld termination, 4.17
  wind protection, 4.9
Gas tungsten arc welding, 2.3.5, 4.1(2), 4.4, Fig. B.4
chemical composition, Table J-2
  current ranges, Table J-1
  tungsten electrodes, 4.4
  wind protection, 4.9
Girders, dimensional tolerances, 4.15, 4.15.4
  camber, 4.11.9, 4.15.3
  depth, 4.15.7
  stiffeners, 4.15.4
  straightness, 4.15.3
  warpage, 4.15.5
  web flatness, 4.15.4
Glass tape, 4.12.1.3, 4.7.4
Girth welds, 4.12.1.2
Gouging, 2.3.5, 4.1, 4.11.4.3, 4.11.8, Table 3.1
Grinding, 4.11.1, 4.11.2
Groove welds, 2.3, 2.3.4, 2.3.5
  acceptance criteria, 3.6.2
  assemble tolerances, 4.12.1.1
  backing, 4.7.3, 4.7.4
  complete joint penetration, 2.3.4, 5.15.2.3, Table 3.4, Fig. B.1
  cross sections, Annex B
  details, 2.2.4.2, 2.3.4, Annex B
  effective length, 2.3.1
  effective throat, Annex E
  partial joint penetration, 2.2.3, 2.3.5, 4.12.1.3, Annex B, Table 3.5, Fig. B.2
    depth of preparation, 2.3.5
    root face, 4.12.1.3(1)
  pipe tests, 3.4.1.2, 3.10.2.1
  plate tests, 3.4.1.1, 3.10.2.1, 3.10.2.2, 3.10.3.2
  profiles, 3.6, Fig. 4.2
  tests, 3.15, 3.21.1, 5.9.1, 5.13
Guided bend test jigs, Figs. 3.13–3.15

## H

Handling acids safely, Annex H
Heat exposure, Table 4.5



Copyright American Welding Society
Provided by IHS under license with AWS
No reproduction or networking permitted without license from IHS
Licensee=University of Texas Revised Sub Account/5620001114
Not for Resale, 08/29/2012 23:44:22 MDT

Helium, 4.5, 6.12.2, 6.15.2

## I

Identification of accepted welds, 5.5.5
Identification of welders, 3.17.2
Image Quality Indicators (IQIs), 5.10.1
  design, Fig. 5.5
  essential hole size, Table 5.1
  hole-type, 5.10.1, Table 5.1
  wire-type, 5.10.1, Table 5.2
  location, 5.10.7.1
  thickness, 5.10.7.2
Inclusions, copper, 4.21
Incomplete fusion, 4.20.5.3, 5.15.2.4
Information to bidders, 5.6.4, 5.7.1, 5.8, 5.8.3
Inspection, 5
  Certified Welding Inspectors, 5.1.3.1(1)
  dye-penetrant, 5.7.5, 5.17
  marking inspected work, 5.5.5
  nondestructive testing, 5.7
    of material, 5.2
    of qualifications, 5.3
    of work and records, 5.5
  radiographic, 5.7.3, 5.9, 5.10
  records, 5.5
  requalification of welders, 5.4.2
  responsibility, 5.1.1
  ultrasonic, 5.7.4, 5.13
  verification, 5.1.1
  visual, 5.5.4
  welder qualification, 5.4
  welding procedure qualification, 5.3.1
Inspector, 5.1.2, 5.1.3
  assistant, 5.1.3.3
  Certified Welding (CWI), 5.1.3.1(1)
  CSA, CWB, 5.1.3.1(2)
  fabrication/erection, 5.1.1
  verification, 5.1.1
Interpass temperature, 4.8, Table 3.1

## J

Job size pipe or tubing, Table 3.4, Table 3.8, Fig. 3.23, Fig. 3.24
Joint welding procedures, 2.3–2.6, Annex B
  limitation variable, 3.14, Table 3.1
  procedure qualification, 3.12.1
  qualification tests, 3.15.1
  sample forms, Annex F
Joints, recommended details, 2.3–2.6, Annex B

## K

K-connections, 3.19.3, Fig. 3.28
Keyhole, 2.3.4(4)

## L

Limitation of variables, 3.14, 3.17.5, 3.20, 6.4.3.1, 6.4.4, 6.5.3, Table 3.1
Limits of positions qualified, 3.18, Table 3.7
Liquid penetrant testing, see dye-penetrant
Load, dead, 7.3.2
Load, live, 7.3.2
Longitudinal bend specimens, 3.8.1

## M

Matching, 5.10.12
Macroetch solutions, Annex H
Macroetch test specimen, 3.6.1.2, Tables 3.3–3.6, Fig. 3.17
Magnesium, 4.8, 4.18.4.2, 6.2.4
Manufacturer, see contractor
Marking inspected work, 5.5.5
Materials, 4.2
Measurement units, 1.6
Mechanical tests, 3.5.2
Melt-through, 3.6.2(6)
Melting-through, 4.7
Metric units, 1.6
Minimum throat, Annex E
Misaligned members, Fig. C-4.3

## N

Nondestructive testing, 5.7
  dye-penetrant, 3.6.1, 5.7.5
  personnel qualification, 5.7.6
  radiographic testing, 5.9
  report forms, Annex G
  ultrasonic testing, 5.13
Nontubular structures, see Structures
Notification given inspector, 5.1.6

## O

Offset, 2.6.1, 4.11.6, 4.12.1.1, 4.12.1.2, 4.15.4, 4.15.5
Options, 4.20.3, 3.10.1.1, 3.10.1.2, 3.10.2.1, 3.10.2.2, 3.10.3.1, 3.10.3.2, 3.11, 3.11.2, 3.21.3, 6.1.2, 6.4.5.3, 6.4.5.6, 6.4.5.8, Table 3.6, Table 6.1, Fig. 3.17, Fig. 3.19
Overlap, 4.20.5.1
Overlap of weld starts, 4.17.6
Owner's responsibility, 5.6.5

## P

Partial joint penetration groove welds, 2.2.3, 2.3.5, 3.7.1.4, 4.12.1.3, Fig. B.2
Partial testing, 5.8.2
Performance qualification, 3.17
  fillet weld fracture tests, 3.21.6.2, 3.21.8.2
  fillet weld tests, 3.21.2, 3.21.6.2
  groove weld tests, 3.21.1
  limitation of variables, 3.14, 3.20, Table 3.1, Table 3.9
  limited thickness, Tables 3.4–3.6
  macroetch test, 3.21.2(3), 3.21.6.4, 3.21.7.4, Tables 3.4–3.6
  period of effectiveness, 3.23
  pipe weld tests, 3.6.3, 3.10.2.1, 3.10.3.1, 3.15.5.2
  plate weld tests, 3.6.3, 3.10.2.1, 3.10.2.2, 3.10.3.1, 3.10.3.2, 3.15.5.1
  position limitations, 3.18, Table 3.3, Table 3.7
  positions, 3.4, 3.8
  preparation of test specimens, 4.22.3
  preparation of test weldments, 3.19
  radiographic test, 3.21.6.3, 3.21.7.3
  records, Annex F
  test pipe or tubing, Table 3.8
  test plates, Table 3.8
  test results
    acceptance criteria, 3.21.7, 3.21.8
    bend tests, 3.21.1(2), 3.21.7.2
    visual, 3.21.7.1, 3.21.8.1
  test specimens 3.21.3, Table 3.8
    location, pipe and rectangular tests, 3.21.4, Fig. 3.20
    preparation, 3.21.5
  tubing, square or rectangular tests, Fig. 3.22
  tubing, groove weld, Figs. 3.28–3.31
  unlimited thickness, Table 3.8
Period of effectiveness, 3.23
Personnel qualification for NDT, 5.7.6
  position, 3.4
  procedure qualification, 3.2
    test specimens, 3.15.3
    visual inspection, 3.6
  welding qualification, 3.12, Table 3.4
    test specification, location, 3.15.5
Piping porosity, excessive, 4.20.5.3
Plasma arc cutting, 4.11.1, 4.11.3
Plasma arc gouging, 4.1(5)
Plasma arc welding, 4.1(3), Table 3.1



Copyright American Welding Society
Provided by IHS under license with AWS
No reproduction or networking permitted without license from IHS
Licensee=University of Texas Revised Sub Account/5620001114
Not for Resale, 08/29/2012 23:44:22 MDT

Plug welds, 2.5, 3.17.6
depth of filling, 2.5.2
effective area, 2.3–2.5
hole diameter, 2.5.3, Table 2.1
shear, 2.5
size, 2.5.3, 2.5.5, Table 2.1
spacing, 2.5.4, 2.5.7
technique for making
thickness, 2.5.2
Porosity, 4.20.5.3, 5.15.2.2, Table 5.3
Position of welding, 3.4, Figs. 3.1–3.6
limits, Table 3.1
PQR, Annex F
Preheat, 3.12.2, 4.8, 4.18.4
Preparation of material, 4.11
Procedure qualification, 3.2, 3.12
limitation of variables, 3.14, Table 3.1
limits of position, 3.14, Table 3.1
PQR, Annex F
records, 3.12.1
results required, 3.15.8, 3.15.9, 3.15.9.3
retests, 3.16
tests, 3.15
test weld positions, 3.4
WPS, Annex F
Procedures specification, 3.1
Profiles, weld, 4.19, Table 4.6, Fig. 4.2

## Q

Qualification, 3
acceptance criteria, 3.6.2, 3.6.3, 3.7.3, 3.8.3, 3.15.8, 3.15.9
essential variables, 3.14
general requirements, 3.1
positions, 3.14
previous qualifications, 3.3.2
previously qualified procedures, 3.2
procedures, 3.12
records, 3.12.1, 5.5, Annex F, Annex G
responsibility, 5.1–5.6
retests, 3.16, 3.22
tack welders, 3.3, 3.20
welders, 3.3, 3.20
welding operators, 3.3, 3.20
welding procedures, 3.1, 3.2
Quality of radiographs, 5.10.10

## R

Radiographic procedure, 5.10.1, 5.10.2
backing, 5.10.3.2, 5.10.3.3
backscattered radiation, 5.10.8.3
examination, 5.12
extension bars, 4.17.2
film length, 5.10.8.1
film type, 5.10.4
film width, 5.10.9
general, 5.10
iridium 192, 5.10.6
radiograph illuminator, 5.12.2
radiographs, 5.9, 5.10.1
shims, 5.10.3.3, 5.10.7.2
source location, 5.10.5.2, 5.10.5.3
sources, 5.10.5, 5.10.6
surface preparation, 5.10.3
thickness transition, 5.10.7.1
weld reinforcement, 5.10.3
Radiographic testing, 5.7.3
acceptance, 5.12.3
extent of testing, 5.10.7
partial testing, 5.8.2
spot testing, 5.8.3, 5.12.2
Radiographs, 5.9, 5.10.1
acceptability of welds, 5.10.8, 5.11
contractor's obligation, 5.12.4
density limitations, 5.10.11
disposition of, 5.12.4
examination, 5.12
H & D density, 5.10.11.1
identification of, 5.10.12
quality, 3.11.2, 3.21.7.3, 5.10.10
report of interpretations, Annex G
submitted to owner, 5.12.4
Records, Annex F, Annex G
Reduced-section tension tests, Fig. 3.7, Fig. 3.8
test specimens, 3.7.1
Reentrant corners, 4.11.6
Reference documents, 1.7, Annex A
Reinforcement, 4.19.2
Removal of extension bars, 4.17.2
Repairs, 4.20
of cut edges, 4.11.4.3
of defective welds, 4.18, 7.4
of distortion, 4.18
of existing structures, 7
of welds, 4.20.5
Report forms, Annex F, Annex G
Responsibility, 1.5, 3.2.2, 5.1.1, 5.6.4, 6.4.2
Retests, 3.16, 3.22
Root-bend test, 3.8.1.3, 3.8.1.6, 3.8.2.1, 3.8.2.2, 3.10.1.2, 3.10.2.2, 3.10.3.2, 3.15.2(3), 3.15.9.2, Fig. 3.11, Fig. 3.12, Fig. 3.19
Run-off plates, 4.17.2

## S

Safety, 1.7, 3.6.1.2, 5.10.2, Annex H
Sample report forms, Annex F, Annex G
Sawing, 4.11.1, 4.11.8
Shielding gas, 4.5, 6.4.4(5), 6.4.4(6), 6.12.1, 6.12.2, 6.13.4, 6.15.2, Table 3.1, Table 3.9
gas metal arc welding, 4.5
storage, 4.5
Shrinkage, 4.18
Side-bend test, 3.8.2.1, Fig. 3.10
Skewed T-joints, 2.4.5, Fig. 2.1
Slot welds, 2.5, 3.17.6, Table 2.1
depth of filling, 2.5.2
effective area, 2.5
ends, 2.5.8
size, 2.5.5
spacing, 2.5.4, 2.5.7
width of slot, 2.5.5
SNT-TC-1A qualification, 5.7.6.2
Solutions for macroetching, Annex H
Soundness tests, 3.9, 3.10
Spatter, 4.22.2
Specimens
WPS qualification, 3.15.4, 3.15.5.1, 3.15.6, 3.15.7, Tables 3.4–3.6
welder qualification, 3.3, Table 3.7, Table 3.8
Spot testing, dye penetrant, 3.6.1
Standard Joint Details, 2
Statically load structures, nontubular
See also Structures
backing, extensions, runoff bars, 4.17.2
base metals, 4.2, 3.2.1
combinations of metals, C4.2
dimensional tolerances, 4.15
flatness of girder webs, 4.15.4
girders, 4.15.4
inspection, 5.7.5, 5.13.1, 5.15.1
quality requirement, 5.14
removal of backing, 4.7.2, 5.10.3.2
stiffeners, 4.15.4
temporary welds, 4.14.2
web flatness, girders, 4.15.4
weld termination, 4.17
standard units, 1.6
Stiffeners, 3.5, 4.15.4
beams, 4.15.3, 4.15.7
girders, 4.15.3
straightness, 4.15.2
tolerances, 4.15.8
Storage of filler metals, 4.3.4
Storage of shielding gases, 4.5
Strengthening of existing structures, 7
associated structural design, 7.3
specifications, 7.3.1
design, 7.3
materials, 7.2
special conditions, 7.1
workmanship, 7.5
Stresses, 2.1



Copyright American Welding Society
Provided by IHS under license with AWS
No reproduction or networking permitted without license from IHS
Licensee=University of Texas Revised Sub Account/5620001114
Not for Resale, 08/29/2012 23:44:22 MDT

Straightness, 4.15.2, 4.15.3
Structures, existing
See Existing structures
Structures, nontubular, dynamically loaded
acceptance welds, 5.14
allowable stress, 2.1
base metal, 4.2
bolted splice, 4.15.4
bolts, 4.12.5
combination of metals, C4.2
contractor's responsibility, 3.2.2
dimensional tolerances, 4.15
discontinuity dimensions, 4.11.4.2, 4.11.4.3, Table 4.3
extension bars, 4.17.2
filler metal, 4.3
filler plates, 4.17.2
flatness of webs, 4.15.4
girders, 4.15.4
in-line discontinuities, 5.15.2.2(4)
inspection, 5.14
dye-penetrant, 5.7.5
radiographic, 5.15.2
ultrasonic, 5.13.1
visual, 5.14
permanent backing, 4.17.2
pores, 5.15.2.1, 5.15.2.2, Table 5.3
restrictions, 4.15.8
splices, 4.15.4
stiffeners, 4.15.4
substitute material, 3.2.2
surface cracks, 5.7.5
temporary backing, 4.7.2
temporary welds, 4.14.2
unacceptable discontinuities, 5.15.2.1–5.15.2.4
web flatness, 4.15.4
weld terminations, 4.17
welds in compression, 5.15.2.2
welds in tension, 5.15.2.1
Structures, nontubular, statically loaded
allowable stresses, 2.1
base metal, 4.2
bolted splice, 4.15.4
combination of metals, C4.2
contractor's responsibility, 3.2.2
dimensional tolerances, 4.15
discontinuity dimensions, 4.11.4.2, 4.11.4.3, Table 4.3
extension bars, 4.17.2
filler metal, 4.3
filler plates, 4.17.2
flatness of webs, 4.15.4
girders, 4.15.4
inspection, 5.14
dye-penetrant, 5.7.5
radiographic, 5.15.1
ultrasonic, 5.13.1
permanent backing, 4.17.2
restrictions, 4.15.8
shrinkage cracks, 5.14
stiffeners, 4.15.4
substitute material, 3.2.2
surface cracks, 5.7.5
temporary backing, 4.17.2
temporary welds, 4.14.2
unacceptable discontinuities, 5.15.1.1–5.15.1.3
undercut, 5.14
unlisted alloys, 3.2.2
web flatness, girders, 4.15.4
weld termination, 4.17
Stud welding, 4.1, 6
acceptance criteria-procedure, 6.4.5
acceptance criteria-production welds, 6.6
alloy requirements, Table 6.2, Table 6.3
arc stud welding, 6.9, Table 6.2
discharge, Table 6.2
general, 6.1
capacitor discharge stud welding, 6.13
mislocated studs, 6.7
preproduction welds, 6.5
procedure qualification, 6.4.3
repair, 6.8
technique, 6.12, 6.15
tension loads, 6.4.5.6, 6.4.5.7, Table 6.1
torque values, 6.4.5.8, Table 6.1, Fig. 6.2
workmanship, 6.3, 6.11
Subsize specimens, Table 3.4, Table 3.8
Surface condition, 4.11.1
Surface finishing, 4.11.2
Surface preparation, 4.11.1, 6.3.1
Symbols, 1.4, 2.2.4

# T

Tack welds, 4.14.1
Tack welder, definition, 3.17.1(3)
Tack welder, qualification, 3.3, 3.3.1, 3.17, 3.19, 3.20
See also performance qualification
limitation of variables, 3.20
period of effectiveness, 3.3.2, 3.23
records, 3.17.4
test report form, Annex F
retests, 3.22
test results, 3.21.7, 3.21.8
test specimens, 3.21.3
Technique, 3, 4.13, Table 4.4
Temperature, ambient, 4.18.4
Temporary backing, 4.7.4, 4.12.1.3(2)
Temporary welds, 4.14, 4.14.2
Tensile strength, Table 3.2
Tension tests, 3.5.2.1, 3.7, 3.15.1(3), 6.2.4, 6.4.5.3, 6.4.5.6–6.4.5.8, Table 3.4, Table 3.5, Table 6.1
Termination of welds, 4.17
Test plates, welded, 3.4.1.1, 3.4.1.3, 3.19.2, Figs. 3.3–3.5
performance qualification, Fig. 3.25, Fig. 3.26
procedure qualification, Fig. 3.17, Fig. 3.18, Fig. 3.20
Test procedures, 3.8.2, 3.10.2, 3.21.6
Test purposes and types, 3.5–3.11, 3.15, 3.21, 5.7–5.9, 5.13
Test records, 3.1(5), 3.17.3, 5.13.2
Test results, 3.7.1.4, 3.12, 3.15.8.2, 3.15.8.3, 3.15.9.2, 3.21.7.2, 3.21.7.4, 3.21.8.2, 6.4.1
Test specimens, 3.7.1, 3.8.1, 3.8.2, 3.9.1, 3.10.1.2, 3.22.2.1, 6.4.5.1, 6.4.5.6, 6.4.5.7, 6.4.6, Tables 3.4–3.6, Table 3.8, Fig. 3.15, Figs. 3.20–3.24, Fig. 3.34
location, 3.15.5–3.15.7, 3.21.4
preparation, 3.15.3, 3.21.3, 3.21.5
Test weld positions, 3.4, 3.11.1, 3.19.1, Table 3.3, Table 3.8, Fig. 3.4, Fig 3.6
T-, Y-, K-connections, Fig. B.4
Tolerances, 4.12, 4.15
alignment, 4.12.1.1, 4.12.5
bearing joints, 4.12.1.3
camber, 4.15.3
dimensions, groove welds, 4.12.1.3
fit-up, Table 3.1
flatness, 4.15.4
offset, 4.15.5
variation from straightness, 4.15.2, 4.15.3
warpage, 4.15.5
Transverse bend specimens, 3.8.1
Tubular connections, Annex D
definition, Fig. D.1
Tubular structures
acceptable welds, 5.15.4, 5 Part D
alignment, 4.12.2
allowable stresses in welds, 2.1, Annex A
base metals, 4.2
backing, 4.12.1.3, 4.7
combinations, C4.2
extension bars, 4.17.2, 4.17.3
runoff plates, 4.17.2, 4.17.3
substitute material, 3.2.2
unlisted alloys, 3.2.2
camber, 4.15.3
compression member tolerances, 4.15
cracks, 5.15.2.1
craters, 4.17, 4.17.5



Copyright American Welding Society
Provided by IHS under license with AWS
No reproduction or networking permitted without license from IHS
Licensee=University of Texas Revised Sub Account/5620001114
Not for Resale, 08/29/2012 23:44:22 MDT

cut edges, 4.11.3
defective base metal, 4.20
defective welded joint, 4.20
dimensional tolerances, 3.12
effective fillet length, 4.12.2
effective weld areas, 2.3, 2.4.3
effective weld throats, 2.4.1, Annex E
filler metal, 4.3
fillet welds, 4.12.2
concavity, Fig. 4.2
convexity, Fig. 4.2
dimensional tolerances, 4.12.2
incomplete fusion, 4.12.2
maximum size, 2.4.4.4
fit-up, 2.2.4, Table 3.1
girth welds, 4.12.1.2
groove welds, tolerances, 4.12.1.3
inspection, 5 Part D
joint configurations, Class II, Fig. B.3, Fig. D.1
K-connections, Fig. B.4
nondestructive testing of tubular structures, 5 Part D
offset, 4.12.1.2
overlap of weld starts, 4.17.6
parts, Fig. D.1
porosity, 5.15.2.2, Table 5.3
procedure qualification tests, 3 Part B, 3.15, 3.21
quality of welds, 5.14, 5 Part D
repair, 4.20
root face tolerance, 4.12.1.3
root opening tolerance, 4.12.1.3
technique, weld terminations, 4.17.4
temporary welds, 3.14
tubular branch connections, Fig. D.1
variations from details, 4.12.1.3
visual inspection, 5.14
weld overlap, 4.17.6
weld terminations, 4.17
Tungsten electrodes, 4.4, Annex K, Table K.1, Table K.2
Types and purposes of tests, 3.5–3.11, 3.15, 3.21, 5.7–5.9, 5.13

## U

Ultrasonic testing, 5.7.4, 5.13, 5.13.1, 5.16
Undercut, 3.6.3, 6.4.5.2, 6.6, Fig. 5.8
Units of measure, 1.6

## V

Verification inspection, 5.1.1, 5.1.2, 5.1.6, 5.8.3, 5.12.3
Vertical position, Figs. 3.1–3.6
Visual inspection, see visual examination
Variable polarity, 4.1, Table 3.1
Visual examination, 3.5.1, 3.6, 3.6.2, 3.6.3, 3.15.1, 3.15.2, 315.7.1, 3.15.9.1, 3.21.1(1), 3.21.2(2), 3.21.7.1, 3.21.8.1, 4.11.4.3, 5.15.4
Vision acuity, 5.1.3.4

## W

Warpage, 4.15.5, Fig. C-4.4
Web centerline, 4.15.5–4.15.7
Webs, 4.11.9, 4.15.4, 4.15.6
Weld access holes, 4.11.7
Weld appearance, Table 4.6
Weld cleaning, 3.1, 4.11.7, 6.4.7.1(6), Table 3.1
completed welds, 4.22
in-process cleaning, 3.1
Weld metal removal, 4.11.4.1, 4.17.4, 4.18.4.3, 4.18.4.4, 4.20.3, 5.6.3
Weld profiles, 4.19, Table 4.6, Fig. 4.2
Weld progression, Table 4.4
Weld specimens, 6.4.5.4
Weld tabs, 5.10.3.1
Weld termination, 4.17
Welder qualification, 3 Part D, 3.3, 3.20, Table 3.7, Table 3.8, Fig. 3.32, Fig. 3.33
essential variables, Table 3.8
fillet weld tests, 3.6.3, 3.10, 3.15.2, 3.21.2
groove weld tests, 3.15, 3.21.1, 5.9.1, 5.13
method of testing, 3.8.2, 3.10.2, 3.21.6
number of specimens, Table 3.8, 3.15.4
period of effectiveness, 3.23
pipe weld tests, 3.4.1.2, 3.10.2.1, Figs. 3.29–3.31
plate weld tests, Figs. 3.25–3.28, Fig. 3.32
position, 3.4, 3.14
production welding position, Table 3.8
records, 3.17.3
retest, 3.16, 3.22
test results
bend results, 3.15.8.3, 3.21.7.2
fillet weld break tests, 3.6.3, 3.10, 3.15.2, 3.15.9.2, 3.21.2, 3.21.8.2
macroetch test, 3.15.8.4, 3.21.7.4, Table 3.4, Table 3.5
radiographic test, 5.7.3
visual, 3.15.9.1, 3.21.2, 3.21.8.1, 5.14, Table 3.4, Table 3.8, Fig. 3.32
test specimens, 3.15.4, Tables 3.4–3.6
location, pipe and box tubing, 3.15.5, Figs. 3.21–3.24
preparation, 3.15.3
tests required, 3.15, 3.21.1, 3.21.2
tubular butt, Figs. 3.29–3.31
Welders, 3.17.1
Welding
equipment, 3.1, 4.6, 5.3, 5.3.2, 5.9.2, 5.10.1, 6.9.1
progression, 4.18.2
Welding operator qualification, 3.17.1(2), 3.20
essential variables, Table 3.8
fillet weld tests, 3.6.3, 3.10, 3.15.2, 3.21.2, Fig. 3.17, Fig. 3.19, Fig. 3.32, Fig. 3.33
groove weld test, 3.15, 3.21.1, 5.9.1, 5.13
method of testing, 3.8.2, 3.10.2, 3.21.6
number of specimens, 3.15.4, Table 3.8
period of effectiveness, 3.23
pipe weld tests, 3.4.1.2, 3.10.2.1, Figs. 3.29–3.31
plate weld tests, Figs. 3.25–3.28, Fig. 3.32
plug welds, 2.5
preparation of test specimens, 3.15.3
retests, 3.16, 3.22
stud welds, 6.3, 6.11
test report form, Annex F
test results required
bend tests, 3.15.8.3, 3.21.7.2
fillet weld break tests, 3.6.3, 3.10, 3.15.2, 3.15.9.2, 3.21.2, 3.21.8.2
macroetch tests, 3.15.8.4, 3.21.7.4, Table 3.4, Table 3.5
radiographic tests, 5.7.3
visual, 3.15.9.1, 3.21.2, 3.21.8.1, 5.14, Table 3.4, Table 3.8, Table 5.6, Fig. 3.32
test specimens, 3.15.4, Tables 3.4–3.6
Welding operators, 3.17
qualification, essential variables, Table 3.9
Welding personnel, 3
Welding Procedure Specification (WPS), 3 Part C
essential variables, 3.14, Table 3.1
qualification, 3 Part D, Table 3.1, Table 3.3, Figs. 3.17–3.20



Copyright American Welding Society
Provided by IHS under license with AWS
No reproduction or networking permitted without license from IHS
Licensee=University of Texas Revised Sub Account/5620001114
Not for Resale, 08/29/2012 23:44:22 MDT

sample forms, Annex F
specific values required, 3.12.1
Welding sequence, 2.2.2, 4.18.1
Welding symbols, 1.4, 2.2.4
Welds
acceptability, 3.11.2, 4.11.4.2, 5.15.1, 5.15.2, Table 4.3
accessibility, 2.2.2
appearance, Table 4.6
cleaning, 4.11.1, 4.22, 6.31
diagrammatic, 2.4.1
length, 2.4.2.4, 2.5.5, 5.1.5, 5.5.1
painting, 4.22.1
profiles, 4.19, Table 4.6, Fig. 4.2
quality, 5.14, 5 Part D
size, 2.2.3, 2.3.2, 2.3.5, 2.4.2.3
stresses, 2.1, 7.3.2
surfaces, 3.6.2(1), 4.11.1, 4.11.3, 5.10.3
temporary, 4.14.2
termination, 4.14
Wind, 4.9
Wire image quality indicators (IQI), 5.10.1, 5.10.3.3, 5.10.9, 5.10.11, Table 5.1, Table 5.2, Figs. 5.1–5.6
Workmanship tolerances, 2.0, 6.1.1(2), 6.3, 6.11
WPS qualification, 3 Part C, 3 Part D, Table 3.1, Table 3.3, Figs. 3.17–3.20
limitation of variables, 3.14, Table 3.1
records, 3.1(5)
retests, 3.16, 3.22
test weld positions, 3.4
tests, 3 Part B, 3.21, 4.15
Wraparound guided bench jig, 3.8.2.2, Fig. 3.15

## X

X-rays, 5.9.1, 5.10.1, 5.10.6, 5.10.11



Copyright American Welding Society
Provided by IHS under license with AWS
No reproduction or networking permitted without license from IHS
Licensee=University of Texas Revised Sub Account/5620001114
Not for Resale, 08/29/2012 23:44:22 MDT

This page is intentionally blank.



Copyright American Welding Society
Provided by IHS under license with AWS
No reproduction or networking permitted without license from IHS
Licensee=University of Texas Revised Sub Account/5620001114
Not for Resale, 08/29/2012 23:44:22 MDT

## List of AWS Documents on Structural Welding

| Designation | Title |
|---|---|
| D1.1/D1.1M | *Structural Welding Code—Steel* |
| D1.2/D1.2M | *Structural Welding Code—Aluminum* |
| D1.3/D1.3M | *Structural Welding Code—Sheet Steel* |
| D1.4/D1.4M | *Structural Welding Code—Reinforcing Steel* |
| D1.5M/D1.5 | *Bridge Welding Code* |
| D1.6/D1.6M | *Structural Welding Code—Stainless Steel* |
| D1.8/D1.8M | *Structural Welding Code—Seismic Supplement* |
| D1.9/D1.9M | *Structural Welding Code—Titanium* |



Copyright American Welding Society
Provided by IHS under license with AWS
No reproduction or networking permitted without license from IHS
Licensee=University of Texas Revised Sub Account/5620001114
Not for Resale, 08/29/2012 23:44:22 MDT

This page is intentionally blank.



Copyright American Welding Society
Provided by IHS under license with AWS
No reproduction or networking permitted without license from IHS
Licensee=University of Texas Revised Sub Account/5620001114
Not for Resale, 08/29/2012 23:44:22 MDT

---`,,`,,`,,,,,,```,,,`,,,`,,,```,,-`-`,,`,,`,`,,`---

Copyright American Welding Society
Provided by IHS under license with AWS
No reproduction or networking permitted without license from IHS

Licensee=University of Texas Revised Sub Account/5620001114
Not for Resale, 08/29/2012 23:44:22 MDT