AWS D14.1/D14.1M:2005
An American National Standard

# Specification for Welding of Industrial and Mill Cranes and Other Material Handling Equipment

American Welding Society

Approved American National Standard
ANSI

Copyright American Welding Society
Provided by IHS under license with AWS
No reproduction or networking permitted without license from IHS
Not for Resale

**Key Words**—Cranes, industrial cranes, lifting devices, material handling equipment, mill cranes

**AWS D14.1/D14.1M:2005**
**An American National Standard**

**Approved by**
**American National Standards Institute**
**February 24, 2005**

# Specification for Welding of Industrial and Mill Cranes and Other Material Handling Equipment

**4th Edition**

**Supersedes ANSI/AWS D14.1-97**

Prepared by
AWS D14 Committee on Machinery and Equipment

Under the Direction of
AWS Technical Activities Committee

Approved by
AWS Board of Directors

## Abstract

Requirements are presented for the design and fabrication of constructional steel weldments that are used in industrial and mill cranes, lifting devices and other material handling equipment. Requirements are also included for modification, weld repair, and postweld treatments of new and existing weldments. Filler metal and welding procedure guidelines are recommended for the applicable base metals, which are limited to carbon and low-alloy steels. Allowable unit stresses are provided for weld metal and base metal for various cyclically loaded joint designs.

**American Welding Society**
550 N.W. LeJeune Road, Miami, Florida 33126

Copyright American Welding Society
Provided by IHS under license with AWS
No reproduction or networking permitted without license from IHS
Not for Resale

## Statement on Use of AWS American National Standards

All standards (codes, specifications, recommended practices, methods, classifications, and guides) of the American Welding Society (AWS) are voluntary consensus standards that have been developed in accordance with the rules of the American National Standards Institute (ANSI). When AWS standards are either incorporated in, or made part of, documents that are included in federal or state laws and regulations, or the regulations of other governmental bodies, their provisions carry the full legal authority of the statute. In such cases, any changes in those AWS standards must be approved by the governmental body having statutory jurisdiction before they can become a part of those laws and regulations. In all cases, these standards carry the full legal authority of the contract or other document that invokes the AWS standards. Where this contractual relationship exists, changes in or deviations from requirements of an AWS standard must be by agreement between the contracting parties.

International Standard Book Number: 0-87171-736-0

American Welding Society, 550 N.W. LeJeune Road, Miami, FL 33126

© 2005 by American Welding Society. All rights reserved
Printed in the United States of America

AWS American National Standards are developed through a consensus standards development process that brings together volunteers representing varied viewpoints and interests to achieve consensus. While AWS administers the process and establishes rules to promote fairness in the development of consensus, it does not independently test, evaluate, or verify the accuracy of any information or the soundness of any judgments contained in its standards.

AWS disclaims liability for any injury to persons or to property, or other damages of any nature whatsoever, whether special, indirect, consequential or compensatory, directly or indirectly resulting from the publication, use of, or reliance on this standard. AWS also makes no guaranty or warranty as to the accuracy or completeness of any information published herein.

In issuing and making this standard available, AWS is not undertaking to render professional or other services for or on behalf of any person or entity. Nor is AWS undertaking to perform any duty owed by any person or entity to someone else. Anyone using these documents should rely on his or her own independent judgment or, as appropriate, seek the advice of a competent professional in determining the exercise of reasonable care in any given circumstances.

This standard may be superseded by the issuance of new editions. Users should ensure that they have the latest edition.

Publication of this standard does not authorize infringement of any patent or trade name. Users of this standard accept any and all liabilities for infringement of any patent or trade name items. AWS disclaims liability for the infringement of any patent or product trade name resulting from the use of this standard.

Finally, AWS does not monitor, police, or enforce compliance with this standard, nor does it have the power to do so.

On occasion, text, tables, or figures are printed incorrectly, constituting errata. Such errata, when discovered, are posted on the AWS web page (www.aws.org).

Official interpretations of any of the technical requirements of this standard may only be obtained by sending a request, in writing, to the Managing Director, Technical Services Division, American Welding Society, 550 N.W. LeJeune Road, Miami, FL 33126 (see Annex C). With regard to technical inquiries made concerning AWS standards, oral opinions on AWS standards may be rendered. However, such opinions represent only the personal opinions of the particular individuals giving them. These individuals do not speak on behalf of AWS, nor do these oral opinions constitute official or unofficial opinions or interpretations of AWS. In addition, oral opinions are informal and should not be used as a substitute for an official interpretation.

This standard is subject to revision at any time by the AWS D14 Committee on Machinery and Equipment. It must be reviewed every five years, and if not revised, it must be either reaffirmed or withdrawn. Comments (recommendations, additions, or deletions) and any pertinent data that may be of use in improving this standard are required and should be addressed to AWS Headquarters. Such comments will receive careful consideration by the AWS D14 Committee on Machinery and Equipment and the author of the comments will be informed of the Committee's response to the comments. Guests are invited to attend all meetings of the AWS D14 Committee on Machinery and Equipment to express their comments verbally. Procedures for appeal of an adverse decision concerning all such comments are provided in the Rules of Operation of the Technical Activities Committee. A copy of these Rules can be obtained from the American Welding Society, 550 N.W. LeJeune Road, Miami, FL 33126.

### Photocopy Rights

Authorization to photocopy items for internal, personal, or educational classroom use only, or the internal, personal, or educational classroom use only of specific clients, is granted by the American Welding Society (AWS) provided that the appropriate fee is paid to the Copyright Clearance Center, 222 Rosewood Drive, Danvers, MA 01923, Tel: 978-750-8400; online: http://www.copyright.com.

Copyright American Welding Society
Provided by IHS under license with AWS
No reproduction or networking permitted without license from IHS
Not for Resale

# Personnel

## AWS D14 Committee on Machinery and Equipment

| | |
|---|---|
| *J. L. Warren, Chair* | CNH America LLC |
| *D. J. Malito, 1st Vice Chair* | Girard Machine Company, Incorporated |
| *L. L. Schweinegruber, 2nd Vice Chair* | Robinson Industries, Incorporated |
| *P. Howe, Secretary* | American Welding Society |
| *D. B. Ashley* | Hartford Steam Boiler Inspection & Insurance Company |
| *B. K. Banzhaf* | CNH America LLC |
| *P. W. Cameron* | Crenlo, Incorporated |
| *P. Collins* | WeldCon Engineering |
| **R. T. Hemzacek* | Consultant |
| *B. D. Horn* | Consultant |
| *D. J. Landon* | Vermeer Manufacturing Company |
| *T. J. Landon* | Chicago Bridge & Iron Company |
| *M. R. Malito* | Girard Machine Company, Incorporated |
| **G. W. Martens* | Grove Worldwide, Incorporated, Manitowoc Crane Group |
| *D. C. Martinez* | Danmar Engineering Company, Incorporated |
| *A. R. Mellini* | Mellini & Associates, Incorporated |
| **H. W. Mishler* | Consultant |
| *R. E. Munson* | R&M Engineering |
| *J. G. Nelson* | Northrop Grumman |
| *A. R. Olsen* | ARO Testing, Incorporated |
| **P. J. Palzkill* | Consultant |
| *C. R. Reynolds* | Deere & Company |
| *W. A. Svekric* | Welding Consultants, Incorporated |
| *E. G. Yevick* | Weld-Met International, Incorporated |
| *V. R. Zegers* | R. E. Technical Services, Incorporated |

## AWS D14A Subcommittee on Industrial and Mill Cranes

| | |
|---|---|
| *J. G. Nelson, Chair* | Northrop Grumman |
| *P. Howe, Secretary* | American Welding Society |
| **L. Seum* | Sheedy Drayage Company |
| *W. A. Svekric* | Welding Consultants, Incorporated |
| *E. G. Yevick* | Weld-Met International, Incorporated |

*Advisor



Copyright American Welding Society
Provided by IHS under license with AWS
No reproduction or networking permitted without license from IHS
Not for Resale

This page is intentionally blank.



Copyright American Welding Society
Provided by IHS under license with AWS
No reproduction or networking permitted without license from IHS
Not for Resale

# Foreword

(This Foreword is not a part of AWS D14.1/D14.1M:2005, *Specification for Welding of Industrial and Mill Cranes and Other Material Handling Equipment*, but is included for informational purposes only.)

This specification was prepared for the overhead crane and material handling industries to continue the advancement of welding and to increase product reliability. This 4th edition provides revisions to ANSI/AWS D14.1-97, *Specification for Welding of Industrial and Mill Cranes and Other Material Handling Equipment*, under the direction of the AWS Machinery and Equipment Committee.

The participating committee, representing manufacturers, users, and government, joined in the preparation of this document. It will provide all concerned, including the general public, with high quality, reliable products and an economical approach to production, consistent with the industry's capabilities.

This specification will be reviewed periodically to assure its success in serving all parties concerned with its provisions. Revisions will be issued when warranted.

Comments and suggestions for the improvement of this standard are welcome. They should be sent to the Secretary, AWS D14 Committee on Machinery and Equipment, American Welding Society, 550 N.W. LeJeune Road, Miami, FL 33126.

Official interpretations of any of the technical requirements of this standard may only be obtained by sending a request, in writing, to the Managing Director, Technical Services Division, American Welding Society. A formal reply will be issued after it has been reviewed by the appropriate personnel following established procedures (see Annex C).



Copyright American Welding Society
Provided by IHS under license with AWS
No reproduction or networking permitted without license from IHS
Not for Resale

This page is intentionally blank.



--`,,`,,`-`-`,,`,,`,`,`---
Copyright American Welding Society
Provided by IHS under license with AWS
No reproduction or networking permitted without license from IHS
Not for Resale

# Table of Contents

**Page No.**

*Personnel* ..... iii
*Foreword* ..... v
*List of Tables* ..... viii
*List of Figures* ..... viii

1. Scope and General Provisions ..... 1
   1.1 Scope ..... 1
   1.2 General Provisions ..... 1

2. Normative References ..... 2
   2.1 American Welding Society (AWS) Standards ..... 2
   2.2 American Society of Mechanical Engineers (ASME) Standards ..... 2
   2.3 American Society for Testing and Materials (ASTM) Standards ..... 2
   2.4 American Society for Nondestructive Testing (ASNT) Standards ..... 2

3. Definitions ..... 3

4. Base Metals ..... 3
   4.1 Specifications ..... 3
   4.2 Proprietary Base Metals ..... 3
   4.3 Tensile and Yield Strengths of a Base Metal ..... 3
   4.4 Weldability ..... 3
   4.5 Quenched and Tempered Steels ..... 3
   4.6 Nonferrous Metals ..... 3

5. Allowable Stresses ..... 7
   5.1 General ..... 7
   5.2 Fatigue ..... 7

6. Weld Joint Design ..... 7
   6.1 General Requirements ..... 7
   6.2 Groove Welds ..... 7
   6.3 Intermittent Groove Welds ..... 7
   6.4 Fillet Welds ..... 7
   6.5 Intermittent Fillet Welds ..... 9
   6.6 Staggered Intermittent Fillet Welds ..... 9
   6.7 Plug and Slot Welds ..... 17
   6.8 Suggested Classification of Welded Joints ..... 18
   6.9 Weld Joint Classes ..... 20
   6.10 Joint Qualification ..... 20
   6.11 Transition of Thicknesses or Widths at Butt Joints ..... 20
   6.12 Material for Joint Extensions, Backing, and Spacers ..... 20
   6.13 Dimensional Tolerances ..... 22
   6.14 Lap Joints ..... 22
   6.15 Corner and T-Joints ..... 23
   6.16 Welds in Combination with Rivets and Bolts ..... 23
   6.17 Eccentricity of Connections ..... 23



Copyright American Welding Society
Provided by IHS under license with AWS
No reproduction or networking permitted without license from IHS
Not for Resale

**Page No.**

7. Workmanship ..... 23
7.1 General ..... 23
7.2 Preparation of the Base Metal ..... 23
7.3 Visual Inspection and Repair of Plate and Wrought Steel Products ..... 24
7.4 Assembly ..... 25
7.5 Control of Distortion and Shrinkage Stresses ..... 27
7.6 Stress Relief ..... 27
7.7 Vibratory Conditioning ..... 27
7.8 Peening ..... 28

8. Processes and Filler Metals ..... 28
8.1 General ..... 28
8.2 Shielded Metal Arc Welding (SMAW) ..... 29
8.3 Submerged Arc Welding (SAW) ..... 32
8.4 Gas Metal Arc Welding (GMAW) and Flux Cored Arc Welding (FCAW) ..... 34
8.5 Electroslag Welding (ESW) and Electrogas Welding (EGW) ..... 34

9. Qualification ..... 36
*Part A—General Requirements* ..... 36
9.1 Approved Procedures ..... 36
9.2 Other Procedures ..... 37
9.3 Welders, Welding Operators, and Tack Welders ..... 37
9.4 Qualification Responsibility ..... 37
*Part B—Procedure Qualification* ..... 37
9.5 Qualification of Welding Procedures ..... 37
9.6 Types of Tests and Purposes ..... 41
9.7 Base Metal ..... 41
9.8 Position of Test Welds ..... 41
9.9 Joint Welding Procedure ..... 42
9.10 Test Specimens ..... 42
9.11 Method of Testing Specimens ..... 49
9.12 Test Results Required ..... 52
9.13 Records ..... 55
9.14 Retests ..... 55
*Part C—Welder Qualification* ..... 55
9.15 General ..... 55
9.16 Limitations ..... 55
9.17 Qualification Tests Required ..... 56
9.18 Groove Weld Plate Qualification Test for Plate of Unlimited Thickness ..... 56
9.19 Groove Weld Plate Qualification Test for Plate of Limited Thickness ..... 56
9.20 Groove Weld Qualification Test for Butt Joints in Pipe or Tubing ..... 56
9.21 Groove Weld Qualification Test for T-, Y-, and K-Connections on Pipe or Tubing ..... 56
9.22 Fillet Weld Qualification Test ..... 63
9.23 Position of Test Welds ..... 63
9.24 Base Metal ..... 65
9.25 Joint Welding Procedure ..... 65
9.26 Test Specimens ..... 65
9.27 Method of Testing Specimens ..... 65
9.28 Test Results Required ..... 66
9.29 Retests ..... 67
9.30 Period of Effectiveness ..... 68
9.31 Records ..... 68
9.32 Workmanship Qualification ..... 68



Copyright American Welding Society
Provided by IHS under license with AWS
No reproduction or networking permitted without license from IHS
Not for Resale

**Page No.**

*Part D—Welding Operator Qualification* ..... 70
9.33 General ..... 70
9.34 Limitations ..... 70
9.35 Qualification Tests Required ..... 70
9.36 Base Metal ..... 71
9.37 Joint Welding Procedure ..... 71
9.38 Test Specimens ..... 72
9.39 Method of Testing Specimens ..... 72
9.40 Test Results Required ..... 75
9.41 Retests ..... 75
9.42 Period of Effectiveness ..... 75
9.43 Records ..... 75
*Part E—Qualification of Tack Welders* ..... 75
9.44 General ..... 75
9.45 Limitations ..... 75
9.46 Qualification Tests Required ..... 75
9.47 Base Metal ..... 75
9.48 Test Specimen ..... 76
9.49 Method of Testing ..... 76
9.50 Test Results Required ..... 76
9.51 Retests ..... 76
9.52 Period of Effectiveness ..... 76
9.53 Records ..... 76

10. Weld Quality and Inspection ..... 77
10.1 General ..... 77
10.2 Owner's Representative ..... 77
10.3 Inspection of Welding Procedure Qualifications ..... 77
10.4 Inspection of Welder, Tack Welder, and Welding Operator Qualifications ..... 77
10.5 Inspection of Work and Records ..... 77
10.6 Visual Examination ..... 78
10.7 Welding Profiles ..... 78
10.8 Nondestructive Examination ..... 78
10.9 Radiographic Examination of Welds ..... 80
10.10 Radiographic Procedure ..... 80
10.11 Acceptability of Radiographed Welds ..... 81
10.12 Examination, Report, and Disposition of Radiographs ..... 81
10.13 Ultrasonic Examination of Welds ..... 82
10.14 Ultrasonic Testing Equipment and Calibration ..... 83
10.15 Ultrasonic Testing Procedure, Acceptance Criteria, and Reports ..... 87
10.16 Magnetic Particle Examination of Welds ..... 92
10.17 Liquid Penetrant Examination of Welds ..... 92

11. Field Weld Repair and Modification ..... 92
11.1 General ..... 92
11.2 Field Repair—Manufacturer's Responsibility ..... 92
11.3 Field Repair—Owner's Responsibility ..... 93

12. Repair and Correction of Defects ..... 93
12.1 Weld Repairs ..... 93
12.2 Base Metal Repairs ..... 93
12.3 Removal of Defective Areas ..... 94
12.4 Distortion and Camber ..... 94
12.5 Correction of Improperly Fitted and Welded Members ..... 94



Copyright American Welding Society
Provided by IHS under license with AWS
No reproduction or networking permitted without license from IHS
Not for Resale

**Page No.**

*Mandatory Annex* ..... 95
*Annex I—Prequalified Weld Joints* ..... 95

*Nonmandatory Annexes* ..... 119
*Annex A—Suggested Forms* ..... 119
*Annex B—Examples of Weld Quality Requirements* ..... 129
*Annex C—Guidelines for Preparation of Technical Inquiries for AWS Technical Committees* ..... 131
*Annex D—Bibliography* ..... 133

*List of AWS Documents on Machinery and Equipment* ..... 135



Copyright American Welding Society
Provided by IHS under license with AWS
No reproduction or networking permitted without license from IHS
Not for Resale

# List of Tables


| Table | | Page No. |
|---|---|---|
| 1 | Weldability Classification of Steels | 4 |
| 2 | Allowable Stress in Weld Metal | 8 |
| 3 | Allowable Stress Range | 9 |
| 4 | Stress Categories to Determine Allowable Stress Range | 10 |
| 5 | Minimum Effective Throat for Partial Joint Penetration Groove Welds | 15 |
| 6 | Minimum Fillet Weld Size | 17 |
| 7 | Limits on Acceptability and Repair of Edge Discontinuities in Cut Surfaces | 25 |
| 8 | Tolerances for Groove Weld Joint Preparations for Arc Welding | 26 |
| 9 | Matching Filler Metal Requirements | 30 |
| 10 | Minimum Preheat and Interpass Temperatures | 31 |
| 11 | Impact Property Requirements at 0°F [–18°C] for Electrogas and Electroslag Welds | 35 |
| 12 | All-Weld-Metal Tension Test Requirements for Electrogas and Electroslag Welds | 36 |
| 13 | Procedure Qualification—Type and Position Limitations | 42 |
| 14 | Number and Type of Test Specimens and Range of Thickness Qualified—Procedure Qualification; Complete Joint Penetration Groove Welds | 46 |
| 15 | Acceptable Reinforcement on Groove Welds in Pipe and Tubing | 55 |
| 16 | SMAW Electrode Groups | 55 |
| 17 | Number and Type of Test Specimens and Range of Thickness Qualified—Welder and Welding Operator Qualification | 57 |
| 18 | Welder Qualification—Type and Position Limitations | 58 |
| 19 | Penetrameter Requirements | 81 |
| 20 | Ultrasonic Testing Angle | 89 |
| 21 | Ultrasonic Acceptance and Rejection Criteria | 91 |




Copyright American Welding Society
Provided by IHS under license with AWS
No reproduction or networking permitted without license from IHS
Not for Resale

# List of Figures


| Figure | | Page No. |
|---|---|---|
| 1 | Illustrative Examples for Table 4 | 13 |
| 2 | Fillet and Combined Weld Dimension | 15 |
| 3 | Size and Effective Throat Measurements for Fillet and Partial Penetration Groove Welds with Reinforcing Fillet Welds | 16 |
| 4 | Staggered Intermittent Fillet Weld | 17 |
| 5 | Classification of Welded Joints | 18 |
| 6 | Transition of Butt Joints in Parts Having Unequal Thickness | 21 |
| 7 | Transition of Width at Butt Joints of Parts Having Unequal Width | 22 |
| 8 | Edge Discontinuities in Cut Material | 25 |
| 9 | Pneumatic Hammer Peening | 29 |
| 10 | Unacceptable Submerged Arc Weld Pass where the Depth and Width Exceed the Face Width | 32 |
| 11 | Positions of Test Plates for Groove Welds | 43 |
| 12 | Positions of Test Pipe or Tubing for Groove Welds | 44 |
| 13 | Positions of Test Plates for Fillet Welds | 45 |
| 14A | Location of Test Specimens on Welded Test Pipe 2 in. [50 mm] or 3 in. [75 mm] in Diameter | 47 |
| 14B | Location of Test Specimens on Welded Test Pipe 6 in. [150 mm] or 8 in. [200 mm] in Diameter | 47 |
| 14C | Location of Test Specimens on Welded Test Plate—Electroslag and Electrogas Welding—Procedure Qualification | 48 |
| 14D | Location of Test Specimens on Welded Test Plate Over 3/8 in. [10 mm] Thick—Procedure Qualification | 49 |
| 14E | Location of Test Specimens on Welded Test Plate 3/8 in. [10 mm] Thick and Under—Procedure Qualification | 50 |
| 15A | Reduced-Section Tension Specimens | 51 |
| 15B | All-Weld-Metal Tension Specimens | 52 |
| 15C | Face- and Root-Bend Specimens | 53 |
| 15D | Side-Bend Specimens | 54 |
| 16 | Fillet Weld Soundness Test for Procedure Qualification | 54 |
| 17A | Test Plate for Unlimited Thickness—Welder Qualification | 59 |
| 17B | Optional Test Plate for Unlimited Thickness, Horizontal Position—Welder Qualification | 59 |
| 18A | Test Plate for Limited Thickness, All Positions—Welder Qualification | 60 |
| 18B | Optional Test Plate for Limited Thickness, Horizontal Position—Welder Qualification | 60 |
| 19A | Pipe Test Butt Joint without Backing—Welder Qualification | 61 |
| 19B | Pipe Test Butt Joint with Backing—Welder Qualification | 61 |
| 20 | Test Joint for T-, Y-, and K-Connections on Pipe or Tubing—Welder Qualification | 61 |
| 21 | Location of Test Specimens on Welded Test Pipe—Welder Qualification | 62 |
| 22 | Fillet Weld Break and Macroetch Test Plate—Welder Qualification, Option 1 | 63 |
| 23 | Fillet Weld Root-Bend Test Plate—Welder Qualification, Option 2 | 64 |
| 24A | Guided-Bend Test Jig—Standard Design | 66 |
| 24B | Alternative Guided-Bend Test Jig—Wraparound Design | 67 |
| 24C | Alternative Guided-Bend Test Jig—Roller-Equipped Design for Bottom Ejection of Test Specimens | 68 |
| 25 | Examples of Workmanship Samples | 69 |
| 26 | Test Plate for Unlimited Thickness—Welding Operator Qualification | 71 |
| 27 | Butt Joint for Electroslag and Electrogas—Welding Operator Qualification | 72 |
| 28 | Fillet Weld Break and Macroetch Test Plate—Welding Operator Qualification, Option 1 | 73 |
| 29 | Fillet Weld Root-Bend Test Plate—Welding Operator Qualification, Option 2 | 74 |




Copyright American Welding Society
Provided by IHS under license with AWS
No reproduction or networking permitted without license from IHS
Not for Resale

**Figure** **Page No.**

30 Fillet Weld Break Specimen—Tack Welder Qualification ..... 76
31 Method of Fracturing Fillet Weld Break Specimen—Tack Welder Qualification ..... 76
32 Acceptable and Unacceptable Weld Profiles ..... 79
33 Weld Quality Requirements for Discontinuities Occurring in Welds (Limitation of Porosity and Fusion-Type Discontinuities) ..... 82
34A RC Resolution Reference Block (U.S. Units) ..... 84
34B RC Resolution Reference Block (SI Units) ..... 85
34C Typical Transducer Positions ..... 86
35 Plan View of UT Scanning Patterns ..... 88
I.1 Prequalified Complete Joint Penetration Groove Welded Joints ..... 95
I.2 Prequalified Partial Joint Penetration Groove Welded Joints ..... 109
A.1 Sample Form E1, Front ..... 120
A.2 Sample Form E1, Back ..... 121
A.3 Sample Form E2 ..... 122
A.4 Sample Form E3 ..... 123
A.5 Sample Form E4 ..... 124
A.6 Sample Form E5 ..... 125
A.7 Sample Form E6 ..... 126
A.8 Sample Form E7 ..... 128
B.1 Examples of Weld Quality Requirements ..... 129



Copyright American Welding Society
Provided by IHS under license with AWS
No reproduction or networking permitted without license from IHS
Not for Resale

This page is intentionally blank.



Copyright American Welding Society
Provided by IHS under license with AWS
No reproduction or networking permitted without license from IHS
Not for Resale

# Specification for Welding of Industrial and Mill Cranes and Other Material Handling Equipment

## 1. Scope and General Provisions

**1.1 Scope.** This specification applies to the welding of all principal structural weldments and all primary welds used in the manufacture of cranes for industrial, mill, power house, and nuclear facilities. Furthermore, the specification applies to other overhead material handling machinery and equipment that support and transport loads within the design rating, vertically or horizontally, during normal operations, and, when agreed upon between the Owner and Manufacturer, to loading caused by abnormal operations or environmental events, such as seismic loading.

Secondary welds that will be subjected to tensile stresses of less than 5000 psi [34.5 MPa] need only meet the requirements of Section 7, Workmanship, and Section 10, Weld Quality and Inspection. The engineering drawings shall specify the joint detail, type, and size of weld. This specification is not intended for application to construction- or crawler-type cranes. For the welding of rails, refer to AWS D15.2, *Recommended Practice for the Welding of Rails and Related Rail Components for Use by Rail Vehicles*.

All provisions of this specification are equally applicable to the strengthening and repairing of existing overhead cranes and material handling equipment as described above.

This specification makes use of both U.S. Customary Units and the International System of Units (SI). The measurements may not be exact equivalents; therefore each system shall be used independently of the other without combining in any way. The specification with the designation D14.1 uses U.S. Customary Units. The specification D14.1M uses SI Units. The latter are shown in appropriate columns in tables and figures or within brackets [ ]. Detailed dimensions on figures are in inches. A separate tabular form that relates the U.S. Customary Units with SI Units may be used in tables and figures.

Safety and health issues and concerns are beyond the scope of this standard, and therefore are not fully addressed herein. Safety and health information is available from other sources, including, but not limited to, ANSI Z49.1, *Safety in Welding, Cutting, and Allied Processes* and applicable federal and state regulations. Some other sources of safety and health information can be found in Annex D.

**1.2 General Provisions.** The Manufacturer's[1] adherence to this specification shall include responsibility for the following:

(1) Welding, as defined in the Scope, in accordance with this specification;

(2) Producing the welds designated on the drawings by appropriate welding symbols and notes containing sufficient detail to show joint preparations compatible with the designated welding processes;

(3) Providing written welding procedures;

(4) Recording results of all procedure and welder qualification tests;

(5) Controlling the use of designated base metals and consumables; and

(6) Inspecting the welds to the requirements of this specification.

**1.2.1 Acceptance.** Acceptance shall be as agreed upon between the Manufacturer and the Owner (purchaser). The fundamental premise of this specification is to provide general stipulations applicable to most situations. Acceptance criteria for production welds different from those stated in this specification may be used for a particular application, provided they are suitably documented by the proposer and approved by the Engineer. These alternate acceptance criteria can be based upon evaluation of suitability for service using past experience, experimental evidence or engineering analysis considering material type, service-load effects, and environmental factors.

1. Manufacturer refers to the organization responsible for the performance of the work covered by this specification (see definition in Section 3).



Copyright American Welding Society
Provided by IHS under license with AWS
No reproduction or networking permitted without license from IHS
Not for Resale

**1.2.2 Welding Symbols.** Welding symbols used on shop drawings shall be those shown in AWS A2.4, *Standard Symbols for Welding, Brazing, and Nondestructive Examination*. Special requirements shall be fully explained by added notes or details.

**1.2.3 Mechanical Testing of Welds.** Methods used in the mechanical testing of welds shall be those described in AWS B4.0 or B4.0M, *Standard Methods for Mechanical Testing of Welds*. When there is a conflict between this specification and AWS B4.0 or B4.0M, the provisions of this specification shall govern.

**1.2.4 Filler Metal Specifications.** All welding consumables shall meet the requirements of the applicable AWS filler metal specifications, except for specific requirements of this specification.

# 2. Normative References

The following standards contain provisions which, through reference in this text, constitute provisions of this AWS standard. For undated references, the latest edition of the referenced standard shall apply. For dated references, subsequent amendments to, or revisions of, any of these publications do not apply.

### 2.1 American Welding Society (AWS) Standards[2]

(1) AWS A2.4, *Standard Symbols for Welding, Brazing, and Nondestructive Examination*

(2) AWS A3.0, *Standard Welding Terms and Definitions*

(3) AWS A5.01, *Filler Metal Procurement Guidelines*

(4) AWS A5.1, *Specification for Carbon Steel Electrodes for Shielded Metal Arc Welding*

(5) AWS A5.5, *Specification for Low-Alloy Steel Electrodes for Shielded Metal Arc Welding*

(6) AWS A5.17, *Specification for Carbon Steel Electrodes and Fluxes for Submerged Arc Welding*

(7) AWS A5.18, *Specification for Carbon Steel Electrodes and Rods for Gas Shielded Arc Welding*

(8) AWS A5.20, *Specification for Carbon Steel Electrodes for Flux Cored Arc Welding*

(9) AWS A5.23, *Specification for Low Alloy Steel Electrodes and Fluxes for Submerged Arc Welding*

(10) AWS A5.25, *Specification for Carbon and Low Alloy Steel Electrodes and Fluxes for Electroslag Welding*

(11) AWS A5.26, *Specification for Carbon and Low Alloy Steel Electrodes for Electrogas Welding*

(12) AWS A5.28, *Specification for Low-Alloy Steel Filler Metals for Gas Shielded Arc Welding*

(13) AWS A5.29, *Specification for Low Alloy Steel Electrodes for Flux Cored Arc Welding*

(14) AWS A5.32, *Specification for Welding Shielding Gases*

(15) AWS B2.1, *Specification for Welding Procedure and Performance Qualification*

(16) AWS B4.0, *Standard Methods for Mechanical Testing of Welds (*U.S. Customary Units only)

(17) AWS B4.0M, *Standard Methods for Mechanical Testing of Welds (*SI Units only)

(18) AWS C4.1, *Oxygen Cutting Surface Roughness Gauge*

(19) AWS QC1, *Standard for AWS Certification of Welding Inspectors*

### 2.2 American Society of Mechanical Engineers (ASME) Standards[3]

(1) ASME B 46.1, *Surface Texture (Surface Roughness, Waviness, and Lay)*

### 2.3 American Society for Testing and Materials (ASTM) Standards[4]

(1) ASTM E 23, *Test Methods for Notched Bar Impact Testing of Metallic Materials*

(2) ASTM E 94, *Standard Guide for Radiographic Examination*

(3) ASTM E 164, *Practice for Ultrasonic Contact Examination of Weldments*

(4) ASTM E 165, *Test Method for Liquid Penetrant Examination*

(5) ASTM E 317, *Practice for Evaluating Performance Characteristics of Ultrasonic Pulse-Echo Testing Systems without the Use of Electronic Measurement Instruments*

(6) ASTM A 435, *Specification for Straight-Beam Ultrasonic Examination of Steel Plates*

(7) ASTM E 709, *Guide for Magnetic Particle Examination*

(8) ASTM E 1316, *Standard Terminology for Nondestructive Examinations*

### 2.4 American Society for Nondestructive Testing (ASNT) Standards[5]

(1) SNT-TC-1A, *Recommended Practice No. SNT-TC-1A*

2. AWS standards are published by the American Welding Society, 550 N.W. LeJeune Road, Miami, FL 33126.

3. ASME standards are published by the American Society of Mechanical Engineers, 3 Park Avenue, New York, NY 10017.

4. ASTM standards are published by the American Society for Testing and Materials, 100 Barr Harbor Drive, West Conshohocken, PA 19428-2959.

5. ASNT standards are published by the American Society for Nondestructive Testing, Inc., P.O. Box 28518, 1711 Arlingate Lane, Columbus, OH 43228-0518.



Copyright American Welding Society
Provided by IHS under license with AWS
No reproduction or networking permitted without license from IHS
Not for Resale

# 3. Definitions

The terms that follow are defined for the purposes of this specification. Other terms used in this specification are defined in AWS A3.0, *Standard Welding Terms and Definitions*.

**Engineer.** The responsible technical authority.

**Manufacturer.** The organization responsible for the performance of the work covered by this specification.

**Owner.** The person, company, or agency that purchases the equipment.

**principal structural weldments.** Those weldments that carry the main working loads during normal operations.

**primary welds.** Welds, the failure of which would result in (1) a carried load being dropped in excess of 4 in. [100 mm] or (2) an increase of stress beyond the allowable stress limits, as defined in Section 5, Allowable Stresses, in other welds or base metal. Any welds subject to only compressive stresses are not considered primary.

**secondary welds.** Welds not covered by the requirements of primary welds; secondary welds shall be noted as such on the drawings. Secondary welds only need to meet the requirements of Section 7, Workmanship, and Section 10, Weld Quality and Inspection.

**tensile strength of the weld metal.** The minimum tensile strength specified for the filler metal classification as published in the applicable filler metal specification.

# 4. Base Metals

**4.1 Specifications.** All ferrous and nonferrous metals, structural steel, steel castings, forgings, and any other metals used in the fabrication by welding of all components for overhead material handling machinery and equipment shall be identified by a specification. Common industry-wide specifications from organizations such as the American Society for Testing and Materials (ASTM), the American Iron and Steel Institute (AISI), the American Petroleum Institute (API), and the Society of Automotive Engineers (SAE), or written proprietary specifications developed by an individual equipment manufacturer, may be used.

**4.2 Proprietary Base Metals.** The weldability of and the procedure for welding (1) base metals covered by a specific equipment manufacturer's proprietary specification, (2) steels not listed in Table 1, or (3) base metals not covered by accepted national specifications, shall be established by qualification, except as provided for in 4.4.

**4.3 Tensile and Yield Strengths of a Base Metal.** The minimum specified tensile and yield strengths for base metals are listed in Table 1. When Table 1 or the base metal specification does not establish the minimum tensile and yield strengths for acceptance, the Manufacturer shall establish the minimum tensile and yield strengths for design purposes. The documentation may be in the form of references to published data or compilations of test data. In the establishment of minimum tensile and yield strengths for design purposes, due regard shall be made for size effects, thermal or mechanical treatments, and the effect of the welding process on the base material in the heat-affected zone (HAZ).

**4.4 Weldability.** Steel base metals listed in Table 1 (including combinations thereof) shall be considered weldable without separate qualification, except base metals with a minimum yield strength of 90 ksi [620 MPa] or higher (see 9.1.1). The steels listed in Table 1 are classified into groups according to the degree of difficulty encountered during welding related to chemical composition, rolling condition, or heat treatment. Steels in the higher classifications require greater precautions during welding, such as preheat, limited heat input, or other precautions to ensure sound weldments. When welding combinations of these steels, precautions related to the steel with the higher classification number should be observed.

**4.5 Quenched and Tempered Steels.** Quenched and tempered steels may be used where design and other factors permit or require them. Their use shall be compatible with their mechanical properties and the design requirements as documented by the equipment manufacturer. Documentation may be in either of two forms:

(1) An acceptable service history proving reliability, or

(2) Welding procedure development and qualification data establishing the expected service life of the steel according to accepted engineering criteria for the application.

**4.6 Nonferrous Metals.** Nonferrous metals that meet the requirements of an accepted specification, as described in 4.1, may be used in the fabrication of components by welding. Proper documentation in the form of qualified welding procedures and other experimental data shall be provided by the Manufacturer using such metals.



Copyright American Welding Society
Provided by IHS under license with AWS
No reproduction or networking permitted without license from IHS
Not for Resale

**Table 1**
**Weldability Classification of Steels**

| Material Class[1] | Steel Specification and Grade | | | Minimum or Range of Tensile Strength ksi [MPa] | Minimum Yield Strength ksi [MPa] |
|---|---|---|---|---|---|
| I | AISI/SAE | | | See Notes (2), (3), & (4) | See Notes (2) & (4) |
| | 1005 | Sheet, Plate | Hot Rolled | 42 [290] | 23.5 [162] |
| | 1006 | Bar or Casting | Hot Rolled | 43 [295] | 24 [165] |
| | 1008 | (Usually specified by composition | Hot Rolled | 44 [305] | 24.5 [170] |
| | 1010 | only—without mechanical properties) | Hot Rolled | 47 [325] | 26 [180] |
| | 1012 | | Hot Rolled | 48 [330] | 26.5 [183] |
| | 1013 | | Hot Rolled | 49 [338] | 27 [186] |
| | 1015 | | Hot Rolled | 50 [345] | 27.5 [190] |
| | 1016 | | Hot Rolled | 55 [380] | 30 [205] |
| | 1017 | | Hot Rolled | 53 [365] | 29 [200] |
| | 1018 | | Hot Rolled | 58 [400] | 32 [220] |
| | 1020 | | Hot Rolled | 55 [380] | 30 [205] |
| | 1021 | | Hot Rolled | 61 [420] | 33 [230] |
| | 1025 | | Hot Rolled | 58 [400] | 32 [220] |
| II | ASTM | | | See Note (5) | See Note (5) |
| | A27 | Grade N-1 Castings Chemistry Only | | Not Specified—See 4.3 | Not Specified—See 4.3 |
| | | Grade 60-30 | | 60 [415] | 30 [205] |
| | | Grade 65-35 | | 65 [450] | 35 [240] |
| | A36 | Shapes, Plate, Bar | | 58–80 [400–550] | 36 [250] |
| | A53 | Grade B Pipe | | 60 [415] | 35 [240] |
| | A106 | Grade B Pipe | | 60 [415] | 35 [240] |
| | A131 | Grade A, B, D, CS, DS | | 58–75 [400–520] | 34 [235] |
| | | Ship Building Shapes, Plate, Bars | | | |
| | A139 | Grade A Pipe | | 48 [330] | 30 [205] |
| | | Grade B | | 60 [415] | 35 [240] |
| | | Grade C | | 60 [415] | 42 [290] |
| | | Grade D | | 60 [415] | 46 [315] |
| | | Grade E | | 66 [455] | 52 [360] |
| | A283 | Grade C, ≤ 2 in. [50 mm] Plate | | 55–75 [380–515] | 30 [205] |
| | | Grade D, ≤ 1 in. [25 mm] | | 60–80 [415–550] | 33 [230] |
| | A381 | Grade Y35 Pipe | | 60 [415] | 35 [240] |
| | A500 | Grade A Tubing | | 45 [310] | 33 [288] |
| | | Grade B | | 58 [400] | 42 [290] |
| | A501 | Tubing | | 58 [400] | 36 [250] |
| | A515 | Grade 55, ≤ 8 in. [200 mm] Plate *Grade no longer listed in A515-2003* | | 55–75 [380–515] | 30 [205] |
| | A516 | Grade 55, ≤ 8 in. [200 mm] Plate | | 55–75 [380–515] | 30 [205] |
| | | Grade 60, ≤ 8 in. [200 mm] Plate | | 60–80 [415–550] | 32 [220] |
| | A524 | Grade I, ≤ 0.375 in. [10 mm] Pipe | | 60–85 [414–586] | 35 [240] |
| | | Grade II, > 0.375 in. [10 mm] Pipe | | 55–80 [380–550] | 30 [205] |
| | A570—*Withdrawn in 2000* | Grade 36 Sheet, ≤ 0.229 in. [6 mm] | | 53 [365] | 36 [250] |
| | A573 | Grade 58 Plate, ≤ 1.5 in. [40 mm] | | 58–71 [400–490] | 32 [220] |
| | | Grade 65 Plate, ≤ 1.5 in. [40 mm] | | 65–77 [450–530] | 35 [240] |
| | A662 | Grade A Plate, ≤ 1.5 in. [40 mm] | | 58–78 [400–540] | 40 [275] |
| | | Grade B Plate, ≤ 1.5 in. [40 mm] | | 65–85 [450–585] | 40 [275] |
| | A709 | Grade 36 Shapes, Plate, Bar | | 58–80 [400–550] | 36 [250] |
| | API[6] | | | | |
| | 5L | Grade B Pipe | | 60 [410] | 35 [240] |

(continued)



Copyright American Welding Society
Provided by IHS under license with AWS
No reproduction or networking permitted without license from IHS
Not for Resale

**Table 1 (Continued)**
**Weldability Classification of Steels**

| Material Class[1] | Steel Specification and Grade | | | Minimum or Range of Tensile Strength ksi [MPa] | Minimum Yield Strength ksi [MPa] |
|---|---|---|---|---|---|
| III | AISI/SAE | | | See Notes (2) & (7) | See Notes (2) & (4) |
| | 1030 | Sheet, Plate, Bar, or Casting (Usually specified by composition only—without mechanical properties) | | 68 [470] | 37.5 [260] |
| | ASTM | | | See Note (5) | See Note (5) |
| | A27 | Grade N-2 Castings Heat Treated | | Not Specified—See 4.3 | Not Specified—See 4.3 |
| | | Grade 70-36 | | 70 [485] | 36 [250] |
| | | Grade 70-40 | | 70 [485] | 40 [275] |
| | A106 | Grade C Pipe | | 70 [485] | 40 [275] |
| | A131 | Grade AH32, DH32, EH32 | | 64–85 [440–590] | 46 [315] |
| | | AH36, DH36, EH36 | | 71–90 [490–620] | 51 [355] |
| | | Ship Building Shapes, Plate, Bars | | | |
| | A283 | Grade C, > 2 in. [50 mm] to ≤ 4 in. [100 mm] Plate | | 55–75 [380–515] | 30 [205] |
| | | Grade D, > 2 in. [50 mm] to ≤ 4 in. [100 mm] Plate | | 60–80 [415–550] | 33 [230] |
| | A500 | Grade C Round Tubing | | 62 [427] | 46 [317] |
| | | Grade C Shaped Tubing | | 62 [427] | 50 [345] |
| | A515 | Grade 60, ≤ 2 in. [50 mm] Plate | | 60–80 [415–550] | 32 [220] |
| | | Grade 65, ≤ 2 in. [50 mm] Plate | | 65–85 [450–585] | 35 [240] |
| | A516 | Grade 60, ≤ 2 in. [50 mm] Plate | | 60–80 [415–550] | 32 [220] |
| | | Grade 65, ≤ 2 in. [50 mm] Plate | | 65–85 [450–585] | 35 [240] |
| | A537 | Class 1, ≤ 2.5 in. [65 mm] Plate | | 70–90 [485–620] | 50 [345] |
| | A572 | Shapes, Plate, Sheet, & Bar | | | |
| | | HSLA Cb-V Steels | | | |
| | | Grade 42, ≤ 2 in. [50 mm] | | 60 [415] | 42 [290] |
| | | Grade 50, ≤ 0.5 in. [13 mm] | | 65 [450] | 50 [345] |
| | | Grade 50, > 0.5 [13 mm] to ≤ 2 in. [50 mm] | | | |
| | | Type 1 or 2 Killed Steel | | 65 [450] | 50 [345] |
| | A588 | Grades A, B, C, & K Shapes, Plate, & Bar | | | |
| | | ≤ 4 in. [100 mm] | | 70 [480] | 50 [340] |
| | A606 | Type 2 & 4 Sheet ≤ 0.180 in. [5 mm] | | | |
| | | Weathering Steel—As Rolled Cut Lengths | | 70 [480] | 50 [340] |
| | | All Other Coils & Cut Lengths | | 65 [450] | 45 [310] |
| | A607—*Withdrawn in 2000* | Type 1 Class 2 Sheet ≤ 0.180 in. [5 mm] HSLA Non-Weathering | Grade 45<br>Grade 50 | 60 [410]<br>65 [450] | 45 [310]<br>50 [340] |
| | A618 | HSLA Structural Tubing | | | |
| | | Wall ≤ 3/4 in. [19 mm] | Grade II | 70 [485] | 50 [345] |
| | | Wall >3/4 in. [19 mm] to ≤ 1.5 in. [38 mm] | Grade II | 67 [460] | 46 [315] |
| | | | Grade III | 65 [450] | 50 [345] |
| | A633 | HSLA Normalized Structural | | | |
| | | Plate, ≤ 4 in. [100 mm] | Grade A | 63–83 [430–570] | 42 [290] |
| | | Plate, ≤ 2.5 in. [65 mm] | Grades C & D | 70–90 [485–620] | 50 [345] |
| | | Plate, >2.5 in. [65 mm] to ≤ 4in. [100 mm] | Grades C & D | 65–85 [450–590] | 46 [315] |
| | A662 | Grade B PV Plate Moderate & Low Temp. Applications | | 65–85 [450–585] | 40 [275] |

(continued)



Copyright American Welding Society
Provided by IHS under license with AWS
No reproduction or networking permitted without license from IHS
Not for Resale

## Table 1 (Continued)
## Weldability Classification of Steels

| Material Class[1] | Steel Specification and Grade | | | Minimum or Range of Tensile Strength ksi [MPa] | Minimum Yield Strength ksi [MPa] |
|---|---|---|---|---|---|
| III (Cont'd) | A709 | Structural Shapes, Plate, Bars–Bridges | | | |
| | | Non-Weathering | Grade 50 | 65 [450] | 50 [345] |
| | | Weathering | Grade 50W | 70 [485] | 50 [345] |
| | API[6] | | | | |
| | 5LX | Grade 42 High-Strength Pipe | | 60 [410] | 42 [290] |
| IV | ASTM | | | See Note (5) | See Note (5) |
| | A283 | Grade C, > 4 in. [100 mm] to ≤ 12 in. [300 mm] Plate | | 55–75 [380–515] | 30 [205] |
| | | Grade D, > 4 in. [100 mm] to ≤ 8 in. [200 mm] Plate | | 60–80 [415–550] | 33 [230] |
| | A515 | Grade 60, > 2 in. [50 mm] Plate | | 60–80 [415–550] | 32 [220] |
| | | Grade 65, > 2 in. [50 mm] Plate | | 65–85 [450–585] | 35 [240] |
| | A516 | Grade 60, > 2 in. [50 mm] Plate | | 60–80 [415–550] | 32 [220] |
| | | Grade 65, > 2 in. [50 mm] Plate | | 65–85 [450–585] | 35 [240] |
| | A537[8] | Class 2, ≤ 2.5 in. [65 mm] Plate | | 80–100 [550–690] | 60 [415] |
| | A572 | Shapes, Plate, Sheet & Bar | | | |
| | | Grade 60, ≤ 1.25 in. [32 mm] | | 75 [520] | 60 [415] |
| | | Grade 65, ≤ 1.25 in. [32 mm] | | 80 [550] | 65 [450] |
| | A607—*Withdrawn in 2000* | HSLA Non-Weathering | Grade 60<br>Grade 65 | 75 [520]<br>80 [550] | 60 [410]<br>65 [450] |
| | A633[8] | HSLA Normalized Structural Plate | | | |
| | | ≤ 4 in. [100 mm] | Grade E | 80–100 [550–690] | 60 [415] |
| | | > 4 in. [100 mm] to ≤ 6 in. [150 mm] | Grade E | 80–100 [550–690] | 55 [380] |
| V[8] | ASTM | | | See Note (5) | See Note (5) |
| | A514 | HSLA Q&T Plate, ≤ 2.5 in. [65 mm] | | 110–130 [760–895] | 100 [690] |
| | | > 2.5 in. [65 mm] to ≤ 6 in. [150 mm] | | 100–130 [690–895] | 90 [620] |
| | A517 | HSLA Q&T PV Plate, ≤ 2.5 in. [65 mm] | | 115–135 [795–930] | 100 [690] |
| | | > 2.5 in. [65 mm] to ≤ 6 in. [150 mm] | | 105–135 [725–930] | 90 [620] |
| | A709 | HSLA Q&T Plate, ≤ 2.5 in. [65 mm] | | 110–130 [760–895] | 100 [690] |
| | | Grades 100 & 100 W, > 2.5 in. [65 mm] to ≤ 4 in. [100 mm] | | 100–130 [690–895] | 90 [620] |

Notes:
(1) Material Class I steels are the most weldable, and Material Class V steel the most difficult to weld of the steels listed.
(2) All tensile and yield strength values for AISI/SAE steels are *estimated minimum values*.
(3) Hardness is not to exceed 160 Brinell for the AISI/SAE steels listed under Weldability Class I. These same AISI/SAE steels should be placed in a higher Weldability Class when hardness exceeds 160 Brinell (ultimate strength greater than 80 ksi [550 MPa]).
(4) See 4.3 for tensile-yield property determination for AISI/SAE steels.
(5) All tensile and yield strength values listed for ASTM steels are specified by the ASTM Standard.
(6) API = American Petroleum Institute.
(7) Hardness is not to exceed 180 Brinell for the AISI/SAE steel listed under Weldability Class III. This same AISI/SAE steel should be placed in a high Weldability Class when hardness exceeds 180 Brinell (ultimate strength greater than 90 ksi [620 MPa]).
(8) Qualification is required due to the upper limit of the tensile strength range or the entire range exceeding 90 ksi [620 MPa].



Copyright American Welding Society
Provided by IHS under license with AWS
No reproduction or networking permitted without license from IHS
Not for Resale

# 5. Allowable Stresses

**5.1 General.** The allowable stresses for base metal and weld metal and the type of fatigue analysis to be used shall conform to the requirements of the design specifications from organizations such as the American Institute of Steel Construction (AISC), the American Society of Mechanical Engineers (ASME), the Crane Manufacturers Association of America (CMAA), or the Monorail Manufacturers Association (MMA). In the absence of other requirements, the allowable stresses in the base metal and the weld metal shall conform to the following requirements.

**5.1.1 Base Metal.** Unless otherwise specified by the design specifications in 5.1, the allowable tensile or compressive stress in the base metal shall be 50% of the yield strength, and the allowable shear stress in the base metal shall be 40% of the yield strength for members not controlled by buckling.

**5.1.2 Weld Metal.** Allowable stresses in the weld metal shall conform to Table 2.

**5.2 Fatigue.** The maximum stress in welded joints subject to repeated stress fluctuations or reversals shall not exceed:

(1) The allowable tensile or compressive stress in 5.1; or

(2) The allowable fatigue stress as defined in the design specifications indicated in 5.1.

In the absence of other requirements, fatigue loading shall be addressed as follows:

**5.2.1** Members subject to repeated loading shall be designed so that the maximum stress does not exceed that allowed by 5.1 and the stress range does not exceed the value given in Table 3 for the applicable stress category and nominal number of loading cycles. Stress categories for weld joint configurations are described in Table 4 and illustrated in Figure 1.

**5.2.2** The stress range is the maximum stress minus the minimum stress. The minimum stress is considered negative if it is opposite in direction to the maximum stress. The nominal number of loading cycles shall be the number defined in the design specification for the duty cycle class or determined by the Engineer for the duty cycle and life specified in the purchase contract.

# 6. Weld Joint Design

**6.1 General Requirements**. Complete information regarding location, type, size, and extent of all welds and welded joints shall be shown on the drawings. Any special inspection requirements shall be noted on the drawings or other appropriate documents. In general, design details should minimize restraint, avoid undue concentration of welding, and afford ample access for depositing the weld metal.

**6.2 Groove Welds**

**6.2.1** The effective area of a weld shall be the effective weld length multiplied by the effective throat.

**6.2.2** The effective length of any groove weld is the length throughout which the correctly proportioned weld cross section exists.

**6.2.3** The effective throat is the minimum distance from the root of a weld to its face, less any reinforcement. For a complete joint penetration weld, this shall be the nominal thickness of the thinner part joined.

**6.2.4** The effective throat of a partial penetration weld is joint penetration below the surface of the member (see Table 5 for the minimum effective throat required).

Shop or working drawings shall specify the groove depths (S) applicable for the weld size (E) required for the welding process and position of welding to be used.

**6.2.5** Groove welds made from one side only, except in secondary members, are prohibited unless they are completely fused to a backing strip, or qualified in accordance with the requirements of this specification (see 6.9).

**6.2.6** A complete joint penetration groove weld is one that has been welded from both sides, or from one side, in which the weld metal completely fills the groove and is fused to the base metal throughout its total thickness (see 6.9).

**6.3 Intermittent Groove Welds.** Intermittent groove welds are prohibited, except in secondary members.

**6.4 Fillet Welds** (See Figures 2 and 3)

**6.4.1** The minimum fillet weld size shall be as shown in Table 6, except where fillet welds are used to reinforce groove welds (see Figure 3).

**6.4.2** The maximum fillet weld size permitted along the edges of members shall be:

(1) The thickness of the base metal when the metal is less than 1/4 in. [6 mm] thick; or

(2) The thickness of the base metal less 1/16 in. [2 mm] when the metal is 1/4 in. [6 mm] or more in thickness, unless the weld is designated on the drawing to be built out to obtain full throat thickness.

**6.4.3** The effective weld area shall be the effective weld length multiplied by the effective throat. The shear stress in a fillet weld shall be considered as applied to this effective area regardless of the direction of applied



Copyright American Welding Society
Provided by IHS under license with AWS
No reproduction or networking permitted without license from IHS
Not for Resale

**Table 2**
**Allowable Stress in Weld Metal**

| Type of Weld | Stress in Weld[1] | | Allowable Stress | Required Weld Strength Level[2] |
|---|---|---|---|---|
| Complete joint penetration groove welds (Joint Class I, II, III, or IV) | Tension normal to the effective area | | Same as base metal | Matching weld metal shall be used. |
| | Compression normal to the effective area | | Same as base metal | Weld metal with a strength level equal to or one classification (10 ksi [69 MPa]) less than matching weld metal may be used. |
| | Tension or compression parallel to the axis of the weld | | Same as base metal | Weld metal with a strength level equal to or less than matching weld metal may be used. |
| | Shear on the effective area | | 0.27 times nominal tensile strength of weld metal, except shear stress on base metal shall not exceed 0.55 times yield strength of base metal. | |
| Partial joint penetration groove welds (Joint Class IV or V) | Compression normal to effective area | Joint not designed to bear | 0.45 times nominal tensile strength of weld metal, except shear stress on base metal shall not exceed 0.55 times yield strength of base metal. | Weld metal with a strength level equal to or less than matching weld metal may be used. |
| | | Joint designed to bear | Same as base metal | |
| | Tension or compression parallel to the axis of the weld[3] | | Same as base metal | |
| | Shear parallel to axis of metal | | 0.27 times nominal tensile strength of weld metal, except shear stress on base metal shall not exceed 0.55 times yield strength of base metal. | |
| | Tension normal to effective area | | 0.27 times nominal tensile strength of weld metal, except tensile stress on base metal shall not exceed 0.36 times yield strength of base metal. | |
| Fillet welds (Joint Class IV, V, or VI) | Shear on effective area | | 0.27 times nominal tensile strength of weld metal, except shear stress on base metal shall not exceed 0.36 times yield strength of base metal. | Weld metal with a strength level equal to or less than matching weld metal may be used. |
| | Tension or compression parallel to axis of weld[3] | | Same as base metal | |
| Plug and slot welds (Joint Class V or VI) | Shear parallel to faying surfaces (on effective area) | | 0.27 times nominal tensile strength of weld metal, except shear stress on base metal shall not exceed 0.36 times yield strength of base metal. | Weld metal with a strength level equal to or less than matching weld metal may be used. |

Notes:
(1) For definitions of effective area, see 6.2, 6.4, and 6.7.
(2) For matching weld metal, see Table 9.
(3) Fillet welds and partial joint penetration groove welds joining the component elements of built-up members, such as flange-to-web connections, may be designed without regard to the tensile or compressive stress in these elements parallel to the axis of the welds.



Copyright American Welding Society
Provided by IHS under license with AWS
No reproduction or networking permitted without license from IHS
Not for Resale

**Table 3**
**Allowable Stress Range (1)**

| Stress Category (From Table 4) | Allowable Stress Range, ksi [MPa] per Nominal Number of Loading Cycles | | | |
|---|---|---|---|---|
| | 20 000 to 100 000 (2) | 100 000 to 500 000 | 500 000 to 2 000 000 | Over 2 000 000 |
| A | 63 [435] | 37 [255] | 24 [165] | 24 [165] |
| B | 49 [340] | 29 [200] | 18 [125] | 16 [110] |
| B' | 39 [270] | 23 [160] | 15 [100] | 12 [80] |
| C | 35 [240] | 21 [145] | 13 [90] | 10 [70] (3) |
| D | 28 [190] | 16 [110] | 10 [70] | 7 [50] |
| E | 22 [150] | 13 [90] | 8 [55] | 5 [34] |
| E' | 16 [110] | 9 [60] | 6 [40] | 3 [20] |
| F | 15 [100] | 12 [80] | 9 [60] | 8 [55] |

Notes:
(1) Stress range is defined as the algebraic difference between the maximum stress and the minimum stress. Tension stress is considered to have the opposite algebraic sign from the compression stress.
(2) For less than 20 000 loading cycles, use the allowable stress for static loading in accordance with 5.1.1.
(3) Flexural stress range of 12 ksi [80 MPa] permitted at toe of stiffener welds or flanges.

load. The effective length of a fillet weld shall be the overall length of the full size fillet, including boxing (end returns).

**6.4.4** Fillet welds terminated at ends or sides of parts or members shall, wherever practicable, be returned continuously around the corners for a distance at least twice the nominal size of the weld where such return can be made in the same plane. Fillet welds deposited on the opposite sides of a common plane of contact between two parts shall be interrupted at a corner common to both welds.

Unless otherwise specified in the contract documents, fillet welds connecting attachments shall start or terminate a distance approximately equal to the weld size from the end of the joint. For girder stiffeners, the welds joining the stiffeners to the web shall start or terminate a distance approximately equal to two times the weld size from the end of the joint.

**6.4.5** Fillet welds in holes or slots may be used to transmit shear in lap joints to prevent the buckling or separation of lapped parts, or to join components of built up members. Fillet welds in holes or slots are not to be considered plug or slot welds.

**6.4.6** Fillet welds shall not be used in skewed T-joints that have an included angle of less than 60° or more than 135°. The edge of the abutting member shall be beveled, when necessary, to limit the root opening to 1/8 in. [3 mm] maximum.

**6.5 Intermittent Fillet Welds**

**6.5.1** The length of any segment of intermittent fillet welds shall not be less than four times the weld size, with a minimum of 2 in. [50 mm]. Welds shall be made on both sides of the joint for at least 25% of its length. Maximum spacing permitted between welds shall be 12 in. [300 mm].

**6.5.2** Intermittent fillet welds may be used to carry calculated loads except as prohibited in 6.5.4.

**6.5.3** Intermittent fillet welds shall be no less than 2 in. [50 mm] in length at each end of the joint. (Note restriction in 6.4.4.)

**6.5.4** Intermittent fillet welds on primary tension members are prohibited.

**6.6 Staggered Intermittent Fillet Welds** (See Figure 4)

**6.6.1** When staggered intermittent fillet welds are used, the clear spacing shall be considered the distance between two consecutive welds on the same side of the plate.

**6.6.2** When the total aggregate length of the staggered intermittent fillet weld is 90% or more of the joint length, any odd number of weld segments may be used provided:

(1) Welds are placed at each end of the joint on one side, and

(2) Clear spacing does not exceed 6 in. [150 mm].

**6.6.3** Intermittent staggered fillet welds on primary tension members are prohibited.



Copyright American Welding Society
Provided by IHS under license with AWS
No reproduction or networking permitted without license from IHS
Not for Resale

**Table 4**
**Stress Categories to Determine Allowable Stress Range**

| General Condition | Situation | Kind of Stress[1] | Stress Category (see Table 3) | Illustrative Example Numbers (See Figure 1)[2] |
|---|---|---|---|---|
| Plain Material | Base metal with rolled or cleaned surface. Flame-cut edges with ANSI smoothness of 1000 or less. | T or Rev. | A | 1, 2 |
| Built-up Members | Base metal and weld metal in members without attachments, built-up plates, or shapes connected by continuous fillet welds parallel to the direction of applied stress. | T or Rev. | B | 3, 4, 5, 6 |
| | Base metal and weld metal in members without attachments, built-up plates, or shapes connected by complete joint penetration groove welds with backing bars not removed, or by partial joint penetration groove welds parallel to the direction of applied stress. | T or Rev. | B' | 3, 4, 5, 6 |
| | Base metal at toe of welds on girder webs or flanges adjacent to welded transverse stiffeners. | T or Rev. | C | 7 |
| | Base metal at ends of partial length welded cover plates narrower than the flange having square or tapered ends, with or without welds across the ends or wider than flange with welds across the ends.<br>Flange thickness ≤0.8 in. [20 mm]<br>Flange thickness >0.8 in. [20 mm] | <br><br><br><br>T or Rev.<br>T or Rev. | <br><br><br><br>E<br>E' | <br><br><br><br>5<br>5 |
| | Base metal at end of partial length welded cover plates wider than the flange without welds across the ends. | | E' | 5 |
| Groove Welds | Base metal and weld metal at complete joint penetration groove welded splices of parts of similar cross section ground flush, with grinding in the direction of applied stress and with weld soundness established by radiographic or ultrasonic inspection in accordance with the requirements of Section 10. | T or Rev. | B | 10, 11 |
| | Base metal and weld metal at complete joint penetration groove welded splices at transitions in width or thickness, with welds ground to provide slopes no steeper than 1 to 2-1/2 with grinding in the direction of applied stress, and with weld soundness established by radiographic or ultrasonic inspection in accordance with the requirements of Section 10.<br>A514 base metal<br>Other base metals | <br><br><br><br><br><br><br>T or Rev.<br>T or Rev. | <br><br><br><br><br><br><br>B'<br>B | <br><br><br><br><br><br><br>12, 13<br>12, 13 |
| | Base metal and weld metal at complete joint penetration groove welded splices, with or without transitions having slopes no greater than 1 to 2-1/2 when reinforcement is not removed but weld soundness is established by radiographic or ultrasonic inspection in accordance with the requirements of Section 10. | T or Rev. | C | 10, 11, 12, 13 |
| Partial Joint Penetration Groove Welds | Weld metal of partial joint penetration transverse groove welds, based on effective throat area of the weld or welds | T or Rev. | F[3] | 16 |

(continued)



Copyright American Welding Society
Provided by IHS under license with AWS
No reproduction or networking permitted without license from IHS
Not for Resale

**Table 4 (Continued)**
**Stress Categories to Determine Allowable Stress Range**

| General Condition | Situation | Kind of Stress[1] | Stress Category (see Table 3) | Illustrative Example Numbers (See Figure 1)[2] |
|---|---|---|---|---|
| Fillet-Welded Connections | Base metal at intermittent fillet welds | T or Rev. | E | |
| | Base metal at junction of axially loaded members with fillet-welded end connections. Welds shall be disposed about the axis of the member so as to balance weld stresses. | | | |
| | b ≤ 1 in. [25 mm] | T or Rev. | E | 17, 18 |
| | b > 1 in. [25 mm] | T or Rev. | E' | 17, 18 |
| | Base metal at members connected with transverse fillet welds. | | | |
| | b ≤ 1 in. [25 mm]<br>b >1 in. [25 mm] | T or Rev. | C[3] | 20, 21 |
| Fillet Welds | Weld metal of continuous or intermittent longitudinal or transverse fillet welds. | S | F[3] | 15, 17, 18, 20, 21 |
| Plug or Slot Welds | Base metal at plug or slot welds. | T or Rev. | E | 27 |
| | Shear on plug or slot welds. | S | F | 27 |
| Mechanically Fastened Connections | Base metal at cross section of high-strength bolted slip-critical connections, except axially loaded joints which induce out-of-plane bending in connected material. | T or Rev. | B | 8 |
| | Base metal at net section of other mechanically fastened joints. | T or Rev. | D | 8, 9 |
| | Base metal at net section of fully tensioned high-strength, bolted bearing connections. | T or Rev. | B | 8, 9 |
| Attachments | Base metal at details attached by complete joint penetration groove welds subject to longitudinal and/or transverse loading when the detail embodies a transition radius R with the weld termination ground smooth and for transverse loading, the weld soundness established by radiographic or ultrasonic inspection in accordance with Section 10. | | | |
| | Longitudinal Loading | | | |
| | R > 24 in. [600 mm] | T or Rev. | B | 14 |
| | 24 in. [600 mm] ≥ R > 6 in. [150 mm] | T or Rev. | C | 14 |
| | 6 in. [150 mm] ≥ R > 2 in. [50 mm] | T or Rev. | D | 14 |
| | R ≤ 2 in. [50 mm] | T or Rev. | E | 14 |
| | Detail base metal for transverse loading: equal thickness and reinforcement removed. | | | |
| | R > 24 in. [600 mm] | T or Rev. | B | 14 |
| | 24 in. [600 mm] ≥ R > 6 in. [150 mm] | T or Rev. | C | 14 |
| | 6 in. [150 mm] ≥ R > 2 in. [50 mm] | T or Rev. | D | 14 |
| | R ≤ 2 in. [50 mm] | T or Rev. | E | 14, 15 |
| | Detail base metal for transverse loading: equal thickness and reinforcement not removed. | | | |
| | R > 24 in. [600 mm] | T or Rev. | C | 14 |
| | 24 in. [600 mm] ≥ R > 6 in. [150 mm] | T or Rev. | C | 14 |
| | 6 in. [150 mm] ≥ R > 2 in. [50 mm] | T or Rev. | D | 14 |
| | R ≤ 2 in. [50 mm] | T or Rev. | E | 14, 15 |

(continued)



Copyright American Welding Society
Provided by IHS under license with AWS
No reproduction or networking permitted without license from IHS
Not for Resale

**Table 4 (Continued)**
**Stress Categories to Determine Allowable Stress Range**

| General Condition | Situation | Kind of Stress(1) | Stress Category (see Table 3) | Illustrative Example Numbers (See Figure 1)(2) |
|---|---|---|---|---|
| Attachments (Cont'd) | Detail base metal for transverse loading: unequal thickness and reinforcement removed. | | | |
| | R > 2 in. [50 mm] | T or Rev. | D | 14 |
| | R ≤ 2 in. [50 mm] | T or Rev. | E | 14, 15 |
| | Detail base metal for transverse loading: unequal thickness and reinforcement not removed. | | | |
| | All R | T or Rev. | E | 14, 15 |
| | Detail base metal for transverse loading. | | | |
| | R > 24 in. [600 mm] | T or Rev. | C | 19 |
| | 6 in. [150 mm] ≥ R > 2 in. [50 mm] | T or Rev. | D | 19 |
| | R ≤ 2 in. [50 mm] | T or Rev. | E | 19 |
| | Base metal at detail attached by complete joint penetration groove welds subject to longitudinal loading. | | | |
| | 2 in. [50 mm] < a ≤ 12b or 4 in. [100 mm] | T or Rev. | D | 15 |
| | a > 12b or 4 in. [100 mm] when b ≤ 1 in. [25 mm] | T or Rev. | E | 15 |
| | a > 12b or 4 in. [100 mm] when b > 1 in. [25 mm] | T or Rev. | E' | 15 |
| | Base metal at detail attached by fillet welds or partial joint penetration groove welds subject to longitudinal loading. | | | |
| | a ≤ 2 in. [50 mm] | T or Rev. | C | 15, 23, 24, 25, 26 |
| | 2 in. [50 mm] < a ≤ 12b or 4 in. [100 mm] | T or Rev. | D | 15, 23, 24, 26 |
| | a > 12b or 4 in. [100 mm] when b ≤ 1 in. [25 mm] | T or Rev. | E | 15, 23, 24, 26 |
| | a > 12b or 4 in. [100 mm] when b > 1 in. [25 mm] | T or Rev. | E' | 15, 23, 24, 26 |
| | Base metal attached by fillet welds or partial joint penetration groove welds subjected to longitudinal loading when the weld termination embodies a transition radius with the weld termination ground smooth. | | | |
| | R > 2 in. [50 mm] | T or Rev. | D | 19 |
| | R ≤ 2 in. [50 mm] | T or Rev. | E | 19 |
| | Fillet-welded attachments where the weld termination embodies a transition radius, weld termination ground smooth, and main material subject to longitudinal loading. | | | |
| | R > 2 in. [50 mm] | T or Rev. | D | 19 |
| | R ≤ 2 in. [50 mm] | T or Rev. | E | 19 |
| | Base metal at stud-type shear connector attached by fillet weld or automatic end weld. | T or Rev. | C | 22 |
| | Shear stress on nominal area of stud-type shear connectors. | S | F | — |

Notes:
(1) "T" signifies range in tensile stress only; "Rev." signifies a range involving reversal of tensile or compressive stress; "S" signifies range in shear, including shear stress reversal.
(2) These examples are provided as guidelines and are not intended to exclude other reasonably similar situations.
(3) Allowable fatigue stress range for transverse partial joint penetration groove welds and transverse fillet welds is a function of the effective throat, depth of penetration, and plate thickness. See Frank and Fisher, *Journal of the Structural Division*, Vol. 105, N. ST9, Sept. 1979.



Copyright American Welding Society
Provided by IHS under license with AWS
No reproduction or networking permitted without license from IHS
Not for Resale

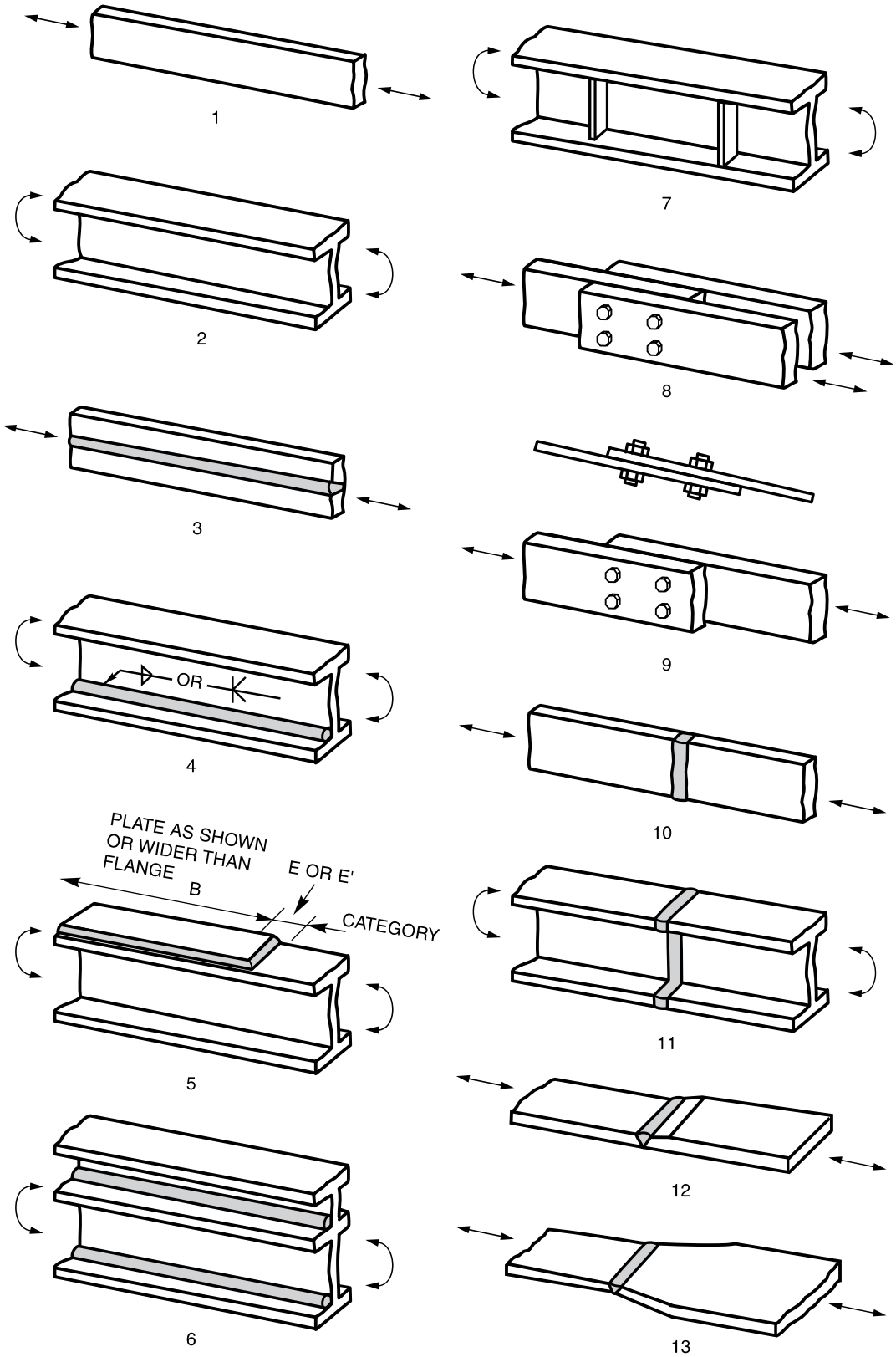


**Figure 1—Illustrative Examples for Table 4**



Copyright American Welding Society
Provided by IHS under license with AWS
No reproduction or networking permitted without license from IHS
Not for Resale

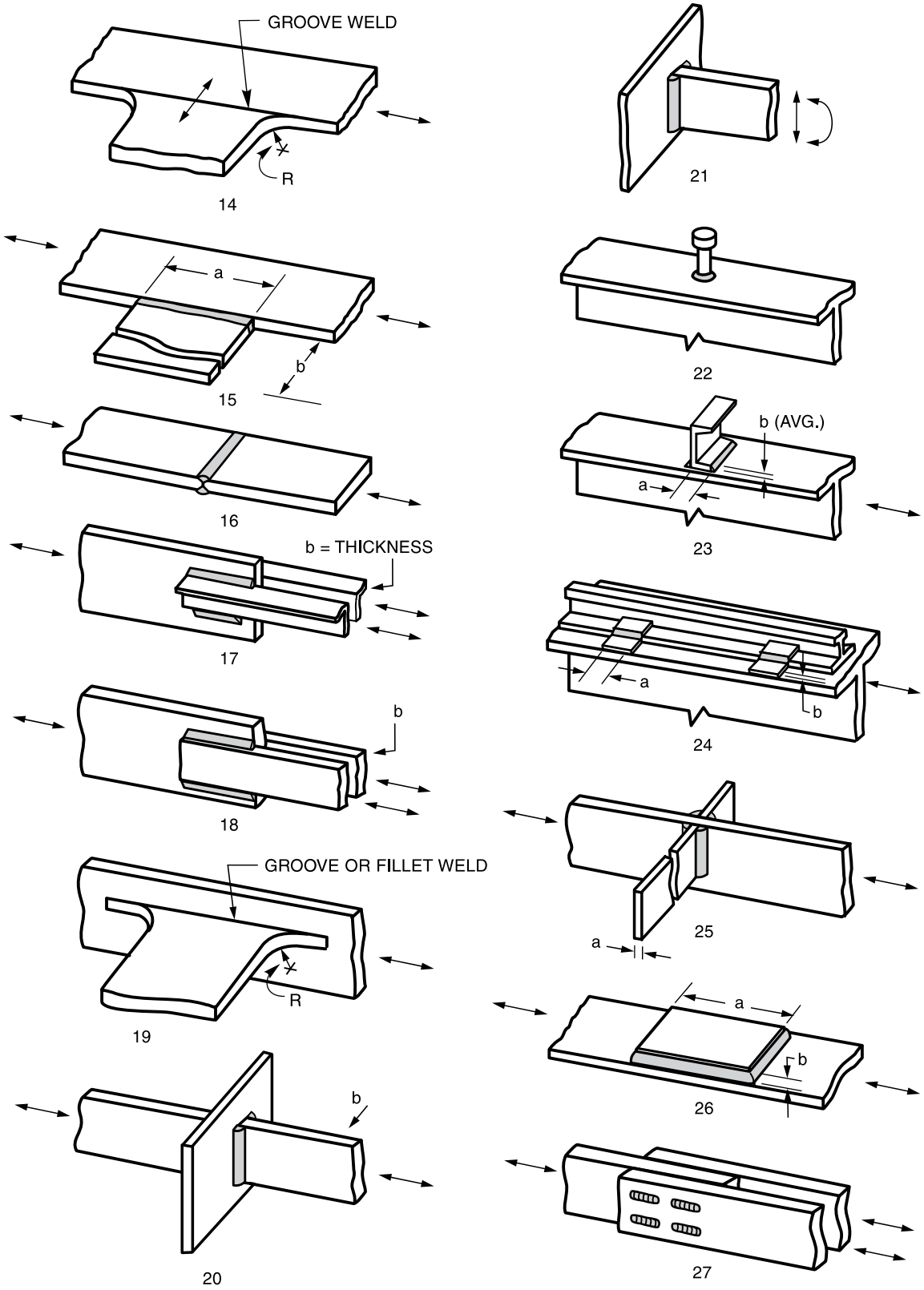


**Figure 1 (Continued)—Illustrative Examples for Table 4**



Copyright American Welding Society
Provided by IHS under license with AWS
No reproduction or networking permitted without license from IHS
Not for Resale

**Table 5**
**Minimum Effective Throat for Partial Joint Penetration Groove Welds**

| Metal Thickness of Thicker Part Jointed | | Minimum Effective Throat | |
|---|---|---|---|
| in. | mm | in. | mm |
| ≤ 1/4 | ≤ 6 | 1/8 | 3 |
| > 1/4 to ≤ 1/2 | > 6 to ≤ 13 | 3/16 | 5 |
| > 1/2 to ≤ 3/4 | > 13 to ≤ 20 | 1/4 | 6 |
| > 3/4 to ≤ 1-1/2 | > 20 to ≤ 40 | 5/16 | 8 |
| > 1-1/2 to ≤ 2-1/4 | > 40 to ≤ 55 | 3/8 | 10 |
| > 2-1/4 to ≤ 6 | > 55 to ≤ 150 | 1/2 | 13 |
| > 6 | > 150 | 5/8 | 16 |

General Note: The effective throat does not need to exceed the thickness of the thinner part joined.

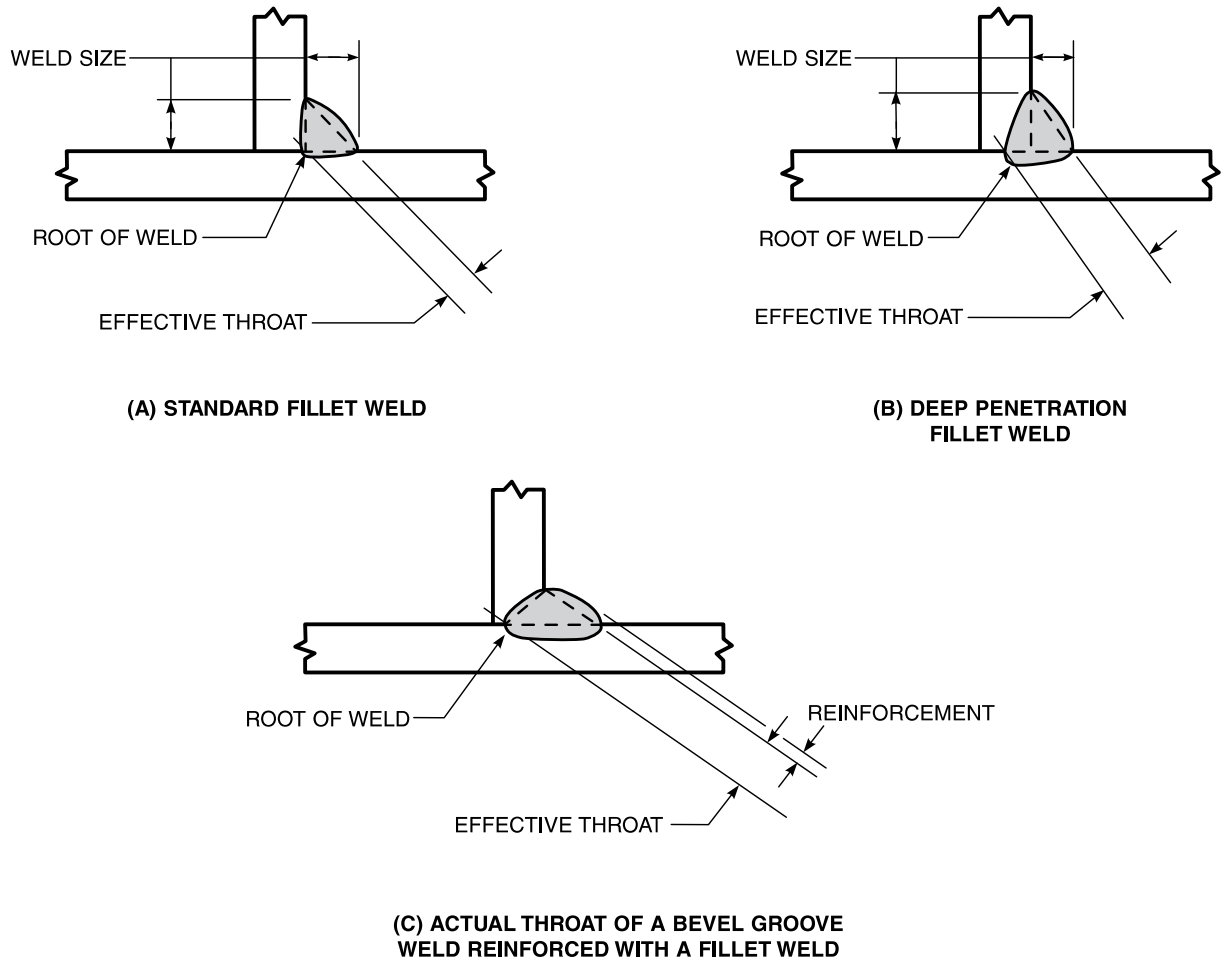


**Figure 2—Fillet and Combined Weld Dimension**



Copyright American Welding Society
Provided by IHS under license with AWS
No reproduction or networking permitted without license from IHS
Not for Resale

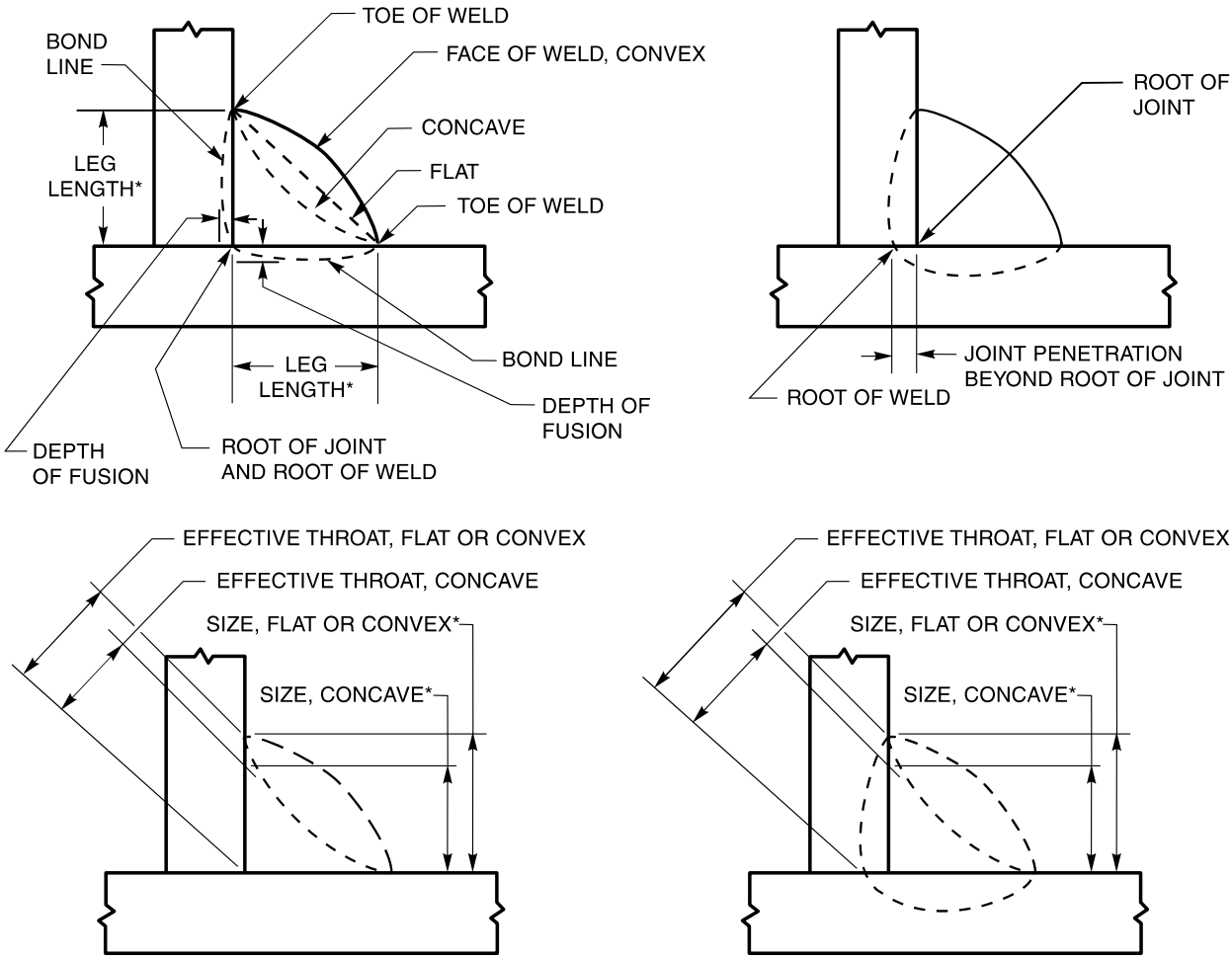


*SIZE OF FILLET WELD AND LEG LENGTH MAY NOT BE EQUAL.

**(A) STANDARD FILLET WELD** **(B) DEEP PENETRATION FILLET WELD**

*Source:* Figures 3(A) and 3(B) from AWS D14.5-97, Figures 2(A) and 2(B).

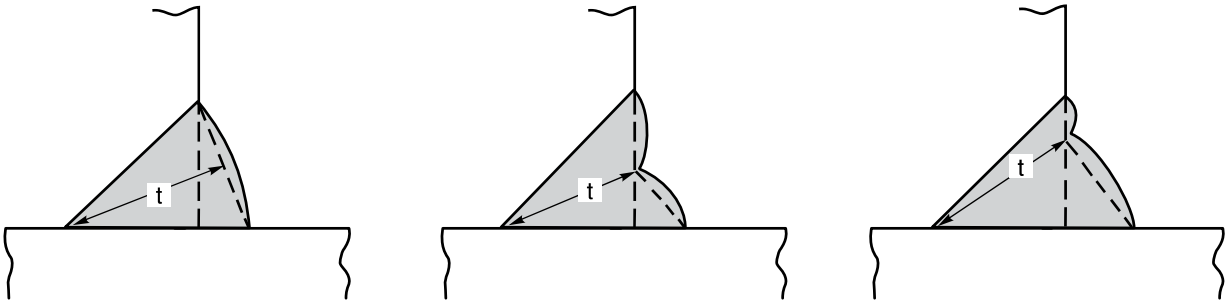


**(C) EFFECTIVE THROATS FOR PARTIAL JOINT PENETRATION GROOVE WELDS WITH REINFORCING FILLET WELDS**

*Source:* Figure 3(C) from AWS A3.0:2001, Figure 25(I).

## Figure 3—Size and Effective Throat Measurements for Fillet and Partial Penetration Groove Welds with Reinforcing Fillet Welds



Copyright American Welding Society
Provided by IHS under license with AWS
No reproduction or networking permitted without license from IHS
Not for Resale

**Table 6**
**Minimum Fillet Weld Size**

| Metal Thickness of Thicker Part Joined | | Weld Size[1] | | | |
|---|---|---|---|---|---|
| | | Shielded Metal Arc Welding | | Deep Penetration Process[2] for Single Pass Welds[3] Flat or Horizontal Positions | |
| in. | mm | in. | mm | in. | mm |
| ≤ 1/4 | ≤ 6 | 1/8 | 3 | 1/8 | 3 |
| > 1/4 to ≤ 1/2 | > 6 to ≤ 13 | 3/16 | 5 | 1/8 | 3 |
| > 1/2 to ≤ 3/4 | > 13 to ≤ 20 | 1/4 | 6 | 3/16 | 5 |
| > 3/4 | > 20 | 5/16 | 8 | 1/4 | 6 |

Notes:
(1) Weld size need not exceed thickness of thinner member. Minimum weld size for cyclically loaded structures is 3/16 in. [5 mm].
(2) The intent of this table is not to establish the arc welding processes that provide deep penetration, but rather, to establish the typical allowable decrease of fillet weld size, provided the Manufacturer can demonstrate that the required effective throat can be obtained by the qualified welding procedure in accordance with Section 9.
(3) Also applies to the root pass of a multiple pass weld.

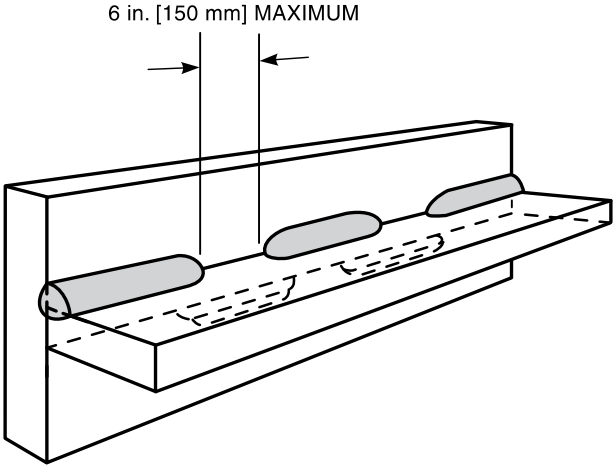


**Figure 4—Staggered Intermittent Fillet Weld**

### 6.7 Plug and Slot Welds

**6.7.1** Plug or slot welds may be used to transmit shear loading in a lap joint to prevent buckling or separation of lapped parts, or to join component parts of built up members, except with quenched and tempered steels.

**6.7.2** The effective area shall be the nominal area of the hole or slot in the plane of the faying surface.

**6.7.3** The minimum diameter of the hole for a plug weld shall be no less than the thickness of the part containing it plus 5/16 in. [8 mm], preferably rounded to the next greater odd 1/16 in. [2 mm]. The maximum diameter shall equal the minimum diameter plus 1/8 in. [3 mm] or 2 1/4 times the thickness of the member, whichever is greater. The minimum center-to-center spacing of plug welds shall be four times the diameter of the hole.

**6.7.4** The length of the slot for a slot weld shall not exceed 10 times the thickness of the weld. The width of the slot shall not be less than the thickness of the part containing it plus 5/16 in. [8 mm], preferably rounded to the next greater odd 1/16 in. [2 mm]. The maximum width shall equal the minimum width plus 1/8 in. [3 mm] or 2 1/4 times the thickness of the member, whichever is greater. The ends of the slot shall be semicircular or shall have the corners rounded to a radius not less than the thickness of the part containing it, except those ends which extend to the edge of the part.

**6.7.5** The depth of filling of plug or slot welds in metal 5/8 in. [16 mm] thick or less shall be equal to the thickness of the metal. In metal over 5/8 in. [16 mm] thick, it shall be at least one-half the thickness of the metal but no less than 5/8 in. [16 mm].

**6.7.6** The minimum center-to-center spacing of plug welds shall be four times the diameter of the hole.

**6.7.7** The minimum spacing of lines of slot welds in a direction transverse to their length shall be four times the width of the slot. The minimum center-to-center spacing in a longitudinal direction on any line shall be two times the length of the slot.



Copyright American Welding Society
Provided by IHS under license with AWS
No reproduction or networking permitted without license from IHS
Not for Resale

**6.7.8** Plug and slot welds on primary tension members are prohibited.

### 6.8 Suggested Classification of Welded Joints

**6.8.1** The classifications of welded joints for use in the design and manufacture of overhead material handling machinery and equipment are listed in 6.9 and illustrated in Figure 5.

**6.8.2** These classifications can be used for qualification and examination of welded joints used in fabrication of equipment covered by this specification.

**6.8.3** It is not the intent of these classifications to restrict the use of other proven methods and procedures that have achieved acceptable results, when agreed to in writing by the Manufacturer and Owner.

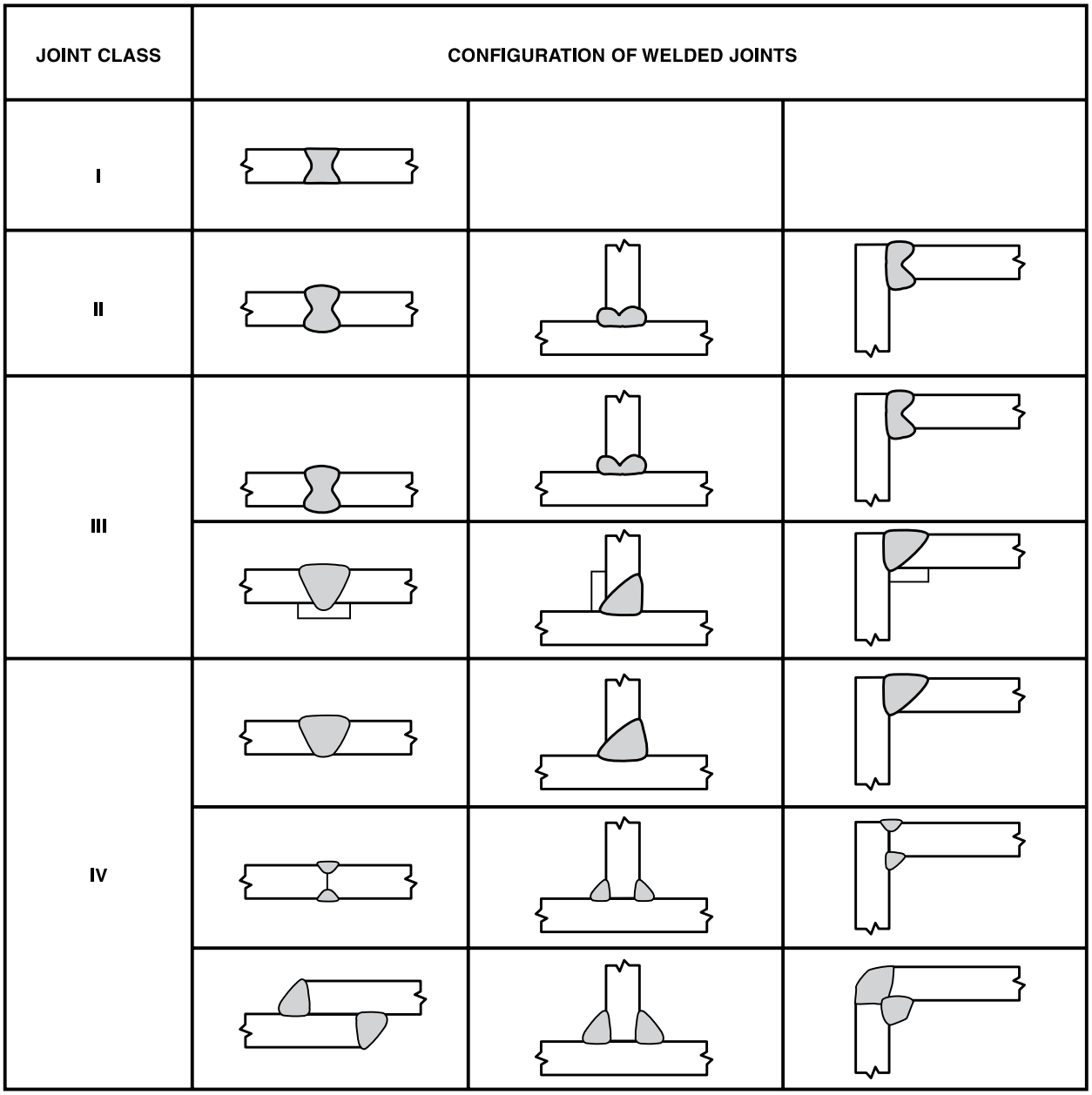


**Figure 5—Classification of Welded Joints**



Copyright American Welding Society
Provided by IHS under license with AWS
No reproduction or networking permitted without license from IHS
Not for Resale

| JOINT CLASS | CONFIGURATION OF WELDED JOINTS | | |
|---|---|---|---|
| V | 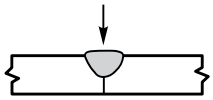 | 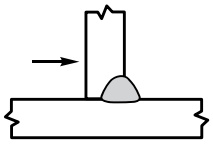 | 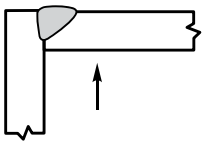 |
| | 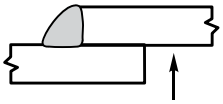 | 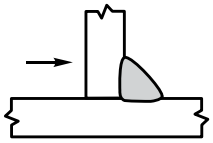 | 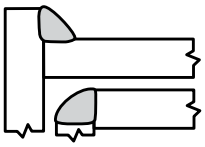 |
| | 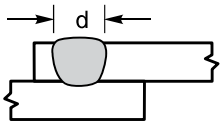 | 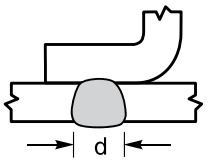 | 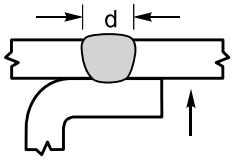 |
| VI | 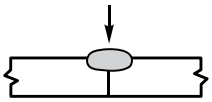 | | 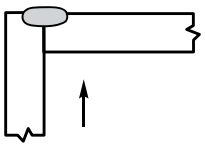 |
| | 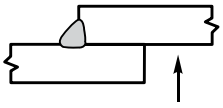 | 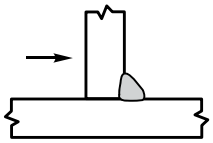 | |
| | 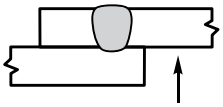 | 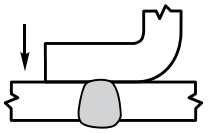 | 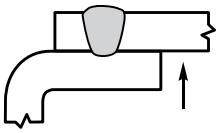 |
| | 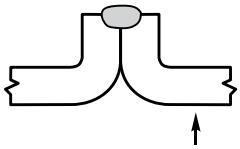 | | 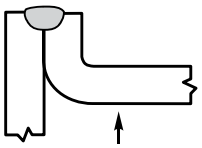 |

General Note: Avoid loading the joint in the arrow direction.

**Figure 5 (Continued)—Classification of Welded Joints**



Copyright American Welding Society
Provided by IHS under license with AWS
No reproduction or networking permitted without license from IHS
Not for Resale

### 6.9 Weld Joint Classes

**6.9.1 Joint Class I.** Joints in this class are double-welded butt joints with complete joint penetration. The root of the first weld is chipped, gouged, or ground to sound metal before making the second weld, and the weld faces are ground or machined flush with the direction of metal removal parallel to the principle stress. Welded joints that are made using backing tape, fusible flux backing material, or a nonfusible backing bar, and are back welded to obtain a completely fused root, shall be qualified in accordance with Section 9, Qualification. Finished joints shall be nondestructively examined according to Section 10, Weld Quality and Inspection, and the results recorded.

**6.9.2 Joint Class II.** Joints in this class are double-welded butt, T-, and corner joints with complete joint penetration. The root of the first weld is chipped, gouged, or ground to sound metal before making the second weld. Welded joints that are made using backing tape, fusible flux backing material, or a nonfusible backing bar, and are back welded to obtain a completely fused root, shall be qualified in accordance with Section 9, Qualification. Finished joints shall be nondestructively examined according to Section 10, Weld Quality and Inspection, and the results recorded.

**6.9.3 Joint Class III.** Joints in this class are complete joint penetration butt, T-, and corner joints welded from both sides, or from one side using a backing strip that is not removed after welding.

**6.9.4 Joint Class IV.** Joints in this class are complete joint penetration butt, T-, and corner joints welded from one side without the use of backing; partial joint penetration butt, T-, and corner joints welded on both sides; and fillet welded lap, T-, and corner joints welded on both sides.

**6.9.5 Joint Class V.** Joints in this class are partial joint penetration butt, T-, and corner joints welded on one side; and fillet, plug, or slot welded lap, T-, and corner joints welded on one side only.

**6.9.6 Joint Class VI.** Joints in this class are joints which do not require special weld groove preparation, such as butt, T-, corner, lap, or edge joints; plug welds; welds of secondary importance in strength; and structural welded joints of secondary importance not subject to dynamic loading.

### 6.10 Joint Qualification

**6.10.1** Joints meeting the following requirements are designated as prequalified:

(1) Conformance with the details of 6.2 through 6.7, and Figures I.1 or I.2 in Annex I; and

(2) Welded with one of the following processes in accordance with the requirements of Section 8, Processes and Filler Metals, as applicable: shielded metal arc, submerged arc, flux cored arc, and gas metal arc with other than short-circuiting transfer.

**6.10.2** Other joint configurations may be used with proper qualification in accordance with Section 9, Qualification.

### 6.11 Transition of Thicknesses or Widths at Butt Joints

**6.11.1** Butt joints between parts of unequal thicknesses and also subject to tensile stress shall have a smooth transition between the offset surfaces at a maximum slope of 1 in 2-1/2 with the adjacent surface of either part. The transition may be accomplished by sloping the weld face(s), by chamfering the thicker part, or by a combination of the two methods (see Figure 6).

**6.11.2** Transition of thickness in butt joints between parts of unequal thickness, that are subject only to shear or compressive stress, shall be accomplished as specified in 6.11.1 when the offset between surfaces at either side of the joint is greater than the thickness of the thinner part connected. When the offset does not exceed the thickness of the thinner part connected, the face of the weld shall be sloped (1) no more than 1 in 2-1/2 from the surface of the thinner part or (2) to the surface of the thicker part if this requires a lesser slope. The exception is that truss member joints and beam and girder flange joints shall be made with a smooth transition of the type specified in 6.11.1.

**6.11.3** Butt joints between parts of unequal width that are subject to tensile stress shall have either (1) a smooth slope between offset edges of no more than 1 in 2-1/2 with the edge of either part or (2) a 2.0 ft [600 mm] minimum radius tangent to the narrower part at the center of the butt joint, as shown in Figure 7. A radius transition is required for steels having yield strength greater than or equal to 90 ksi [620 MPa].

### 6.12 Material for Joint Extensions, Backing, and Spacers

**6.12.1** Material for joint extensions and backing used in welding shall conform to the following requirements:

(1) When used for welding any prequalified steel listed in 4.4, they may be of any of the steels in the same list.

(2) When used for welding with a steel qualified in accordance with this specification, they shall be of the steel qualified.

(3) Use 100 ksi [690 MPa] minimum yield strength steel when and only when welding 100 ksi [690 MPa] minimum yield strength steels.



Copyright American Welding Society
Provided by IHS under license with AWS
No reproduction or networking permitted without license from IHS
Not for Resale

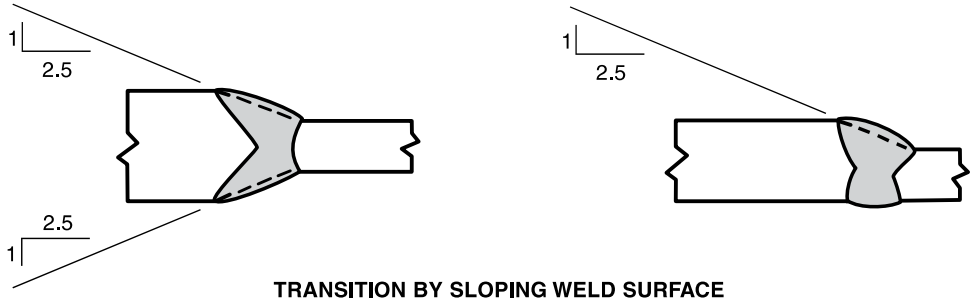


**TRANSITION BY SLOPING WELD SURFACE**

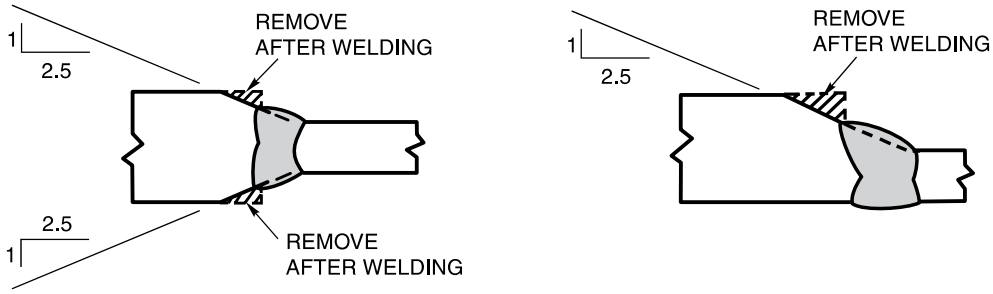


**TRANSITION BY SLOPING WELD SURFACE AND CHAMFERING**

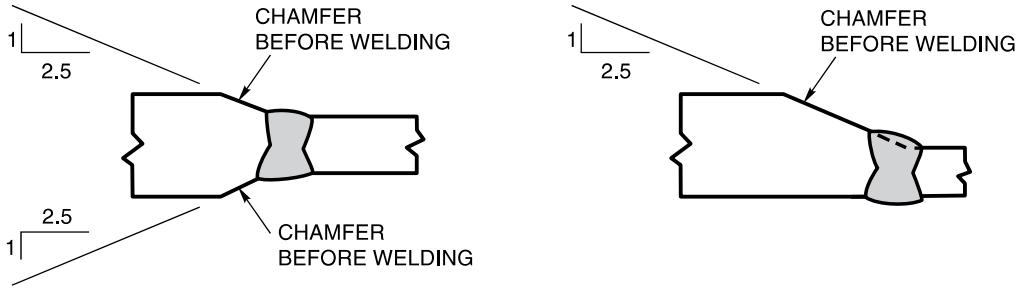


**TRANSITION BY CHAMFERING THICKER PART**

**CENTERLINE ALIGNMENT**
(PARTICULARLY APPLICABLE TO WEB PLATES)

**OFFSET ALIGNMENT**
(PARTICULARLY APPLICABLE TO FLANGE PLATES)

General Notes:
1. Groove may be of any permitted or qualified type and detail.
2. Transition slopes shown are the maximum permitted.

## Figure 6—Transition of Butt Joints in Parts Having Unequal Thickness



Copyright American Welding Society
Provided by IHS under license with AWS
No reproduction or networking permitted without license from IHS
Not for Resale

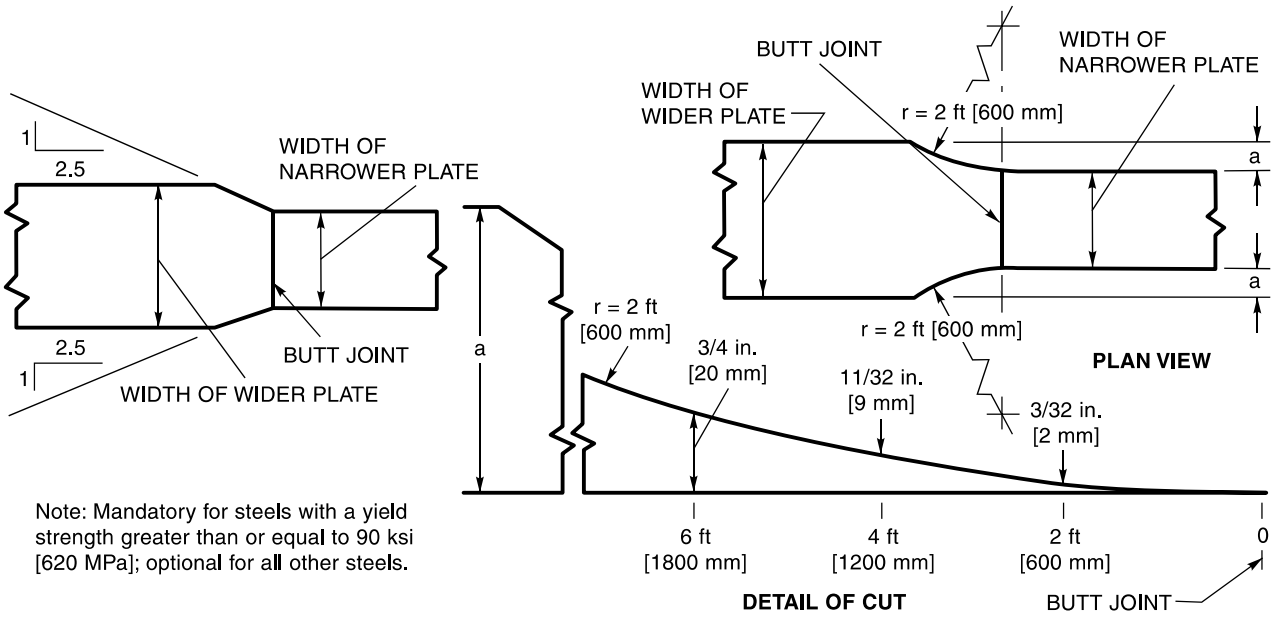


**Figure 7—Transition of Width at Butt Joints of Parts Having Unequal Width (see 6.11.3)**

**6.12.2** Spacers shall be of the same material as the base metal.

**6.13 Dimensional Tolerances.** Dimensions of groove welds specified on design or detailed drawings may vary from the dimensions shown in Figures I.1 and I.2 only within the following limits:

**6.13.1** The specified thickness of base metal or weld effective throat is the maximum nominal thickness that may be used.

**6.13.2** The stated groove angle is the minimum; it may be detailed to exceed the dimensions shown by no more than 10°.

**6.13.3** The stated radius of J and U grooves is the minimum. U grooves may be prepared before or after fit up.

**6.13.4** Double groove welds may have grooves of unequal depth, but the depth of the shallower groove shall be no less than 1/4 of the thickness of the thinner part joined, unless otherwise designated in Figures I.1 and I.2.

**6.13.5** The root face of the joint shall be as shown in Figures I.1 and I.2 with the following variations permitted:

(1) For shielded metal arc, gas metal arc, and flux cored arc welding, it may not be detailed less than the specified dimension.

(2) For complete joint penetration submerged arc welding, the specified root face of the joint is the maximum.

**6.13.6** The stated root opening of the joints is the minimum. It may be detailed to exceed the specified dimensions by no more than 1/16 in. [2 mm], except that the root opening of joints for submerged arc welding shall be detailed as zero (no variation) when so specified.

**6.14 Lap Joints**

**6.14.1** The minimum overlap of parts in stress carrying lap joints shall be five times the thickness of the thinner part. Unless lateral deflection of the parts is prevented, they shall be connected by at least two transverse lines of fillet, plug, or slot welds or by two or more longitudinal fillet or slot welds.

**6.14.2** If longitudinal fillet welds are used alone in lap joints of end connections, the length of each fillet weld shall be no less than the perpendicular distance between the welds. The transverse spacing of the welds shall not exceed 16 times the thickness of the connected thinner part unless suitable provision is made (as by intermediate plug or slot welds) to prevent buckling or separation of the parts. The longitudinal fillet weld may be either at the edges of the member or in slots.



Copyright American Welding Society
Provided by IHS under license with AWS
No reproduction or networking permitted without license from IHS
Not for Resale

**6.14.3** When fillet welds in holes or slots are used, the clear distance from the edge of the hole or slot to the adjacent edge of the part containing it, measured perpendicular to the direction of stress, shall be no less than five times the thickness of the part nor less than two times the width of the hole or slot. The strength of the part shall be determined from the critical net section of the base metal.

**6.15 Corner and T-Joints.** Corner and T-joints that are to be subjected to bending about an axis parallel to the joint shall have their welds arranged to avoid concentration of tensile stress at the root of any weld.

**6.16 Welds in Combination with Rivets and Bolts.** Rivets or bolts used in bearing-type connections shall not be considered as sharing the load in combination with welds. Welds, if used, shall be provided to carry the entire load in the connection. High-strength bolts properly installed as a slip-critical-type connection prior to welding may be considered as sharing the load with the welds. Bolts or rivets used in assembly may be left in place if their removal is not specified. If bolts are to be removed, the plans should indicate whether holes should be filled and in what manner.

### 6.17 Eccentricity of Connections

**6.17.1** Eccentricity between intersecting parts and members shall be avoided insofar as practicable.

**6.17.2** In designing welded joints, adequate provision shall be made for bending stresses due to eccentricity, if any, in the disposition and section of base-metal parts and in the location and types of welded joints.

**6.17.3** For members having symmetrical cross sections, the connection welds shall be arranged symmetrically about the axis of the member, or proper allowance shall be made for unsymmetrical distribution of stresses.

**6.17.4** For axially stressed angle members, the center of gravity of the connecting welds shall lie between the line of the center of gravity of the angle's cross section and the centerline of the connected leg. If the center of gravity of the connecting weld lies outside of this zone, the total stresses, including those due to the eccentricity from the center of gravity of the angle, shall not exceed those permitted by this specification.

# 7. Workmanship

### 7.1 General

**7.1.1** All requirements of this section shall be observed in the production and inspection of welded assemblies produced by any of the processes acceptable under this specification.

**7.1.2** All welding and thermal-cutting equipment shall be so designed and manufactured, and shall be in such condition, as to enable designated personnel to follow the procedures and attain the results described elsewhere in this specification.

**7.1.3** Welding shall not be done when the ambient temperature is lower than 0°F [–18°C], when surfaces are wet or exposed to rain, snow, or high wind velocities, or when welding personnel are exposed to inclement conditions. The maximum permissible wind velocity will vary with the welding process and procedure. Heating, local protection from the elements, or both, shall be used as necessary.

**7.1.4** The size and length of welds shall not be less than those specified by design requirements and detail drawings, except as permitted by 10.6(6), nor shall they exceed those requirements by more than 25% without prior approval of the design change by the responsible Engineer. Also, the location of welds shall not be changed without prior approval of the Design Engineer.

### 7.2 Preparation of the Base Metal

**7.2.1** Surfaces and edges to be welded shall be smooth, uniform, and free from fins, tears, cracks, and other visual defects that would adversely affect the quality of the weld. Surfaces to be welded and surfaces adjacent to a weld shall be free from loose or thick mill scale, slag, rust, paint, moisture, and other foreign material, or contaminants that will prevent proper welding or produce hazardous fumes. Thin mill scale (that can withstand vigorous wire brushing), thin rust-inhibitive coating, or antispatter compound (that will not cause problems with welding) need not be removed.

**7.2.2** When oxyfuel gas cutting is employed, the cutting torch shall be adjusted and manipulated to avoid cutting beyond (inside) the prescribed lines. The roughness of cut surfaces shall not be greater than Sample No. 2 of AWS C4.1, *Surface Roughness Gauge*, for material thicknesses up to 2 in. [50 mm], and Sample No. 1 for material 2 in. [50 mm] to 8 in. [200 mm] thick. Surfaces exceeding the above roughness values and occasional notches or gouges not exceeding 3/16 in. [5 mm] deep shall be corrected by machining or grinding. Notches or other sharp discontinuities exceeding 3/16 in. [5 mm] may be repaired by welding only with the approval of the Design Engineer. Approved weld repairs shall be made only by following a documented repair welding procedure that shall contain the following:

(1) Discontinuity removal and joint preparation.
(2) Welding process and filler metal to be used.



Copyright American Welding Society
Provided by IHS under license with AWS
No reproduction or networking permitted without license from IHS
Not for Resale

(3) Preheat and welding variables and also any postheat requirements necessary to comply with this specification.

(4) Procedures for grinding the completed weld smooth and flush to within the surface roughness acceptance criteria of 7.2.2. Weld repaired surfaces and edges that will not be subsequently incorporated into a welding joint shall be stress relieved by any approved method when determined necessary by the Design Engineer.

**7.2.3** Machining, plasma arc cutting, air carbon arc cutting, oxyfuel gas cutting, oxygen gouging, chipping, or grinding may be used for joint preparation, back gouging, and the removal of unacceptable work or metal. One exception is that oxygen gouging shall not be used on quenched and tempered steel. Thermally cut surfaces should be ground as needed to proper contour. Preparation of nonferrous base metals by nontraditional methods shall be a matter of agreement between the Manufacturer and Owner.

**7.2.4** Edges of built up beam and girder webs shall be cut to the prescribed camber with empirically developed manufacturing allowance for shrinkage due to cutting and welding. However, deviation from the specified camber tolerances may be corrected by carefully supervised application of a limited amount of localized heat or other suitable means of obtaining the specified camber.

The use of flame straightening of distorted members and camber correction by localized heating shall have the approval of the Design Engineer and follow an approved written procedure (see 12.4). When flame straightening is used, the temperature of the heated areas shall be accurately measured. The temperature shall not exceed 1100°F [590°C] for quenched and tempered steels or normalized and tempered steels, and 1200°F [650°C] for other steels.

**7.2.5 Dimensional Tolerances.** Dimensions of built up beams and girders shall be within the tolerance of the general specification governing the work, and also within the following special tolerances. All measurements shall be taken at the Manufacturer's plant prior to shipment, unless otherwise specified.

**7.2.5.1** Maximum deviation from straightness, $D_s$, (referenced to the neutral axis) of welded beams or girders, where there is no specified sweep:

$D_s$, in. = 0.0125 × total length, ft

$D_s$, mm = 1.04 × total length, m

**7.2.5.2** Maximum deviation from specified camber (in the service position), $D_c$, of welded beam or girders:

$D_c$, in. = ±0.003 × total length, ft, or ±1/4 in, whichever is greater

$D_c$, mm = ±0.25 × total length, m, or ±6 mm, whichever is greater

**7.2.5.3** Lateral deviation between the centerline of the web and the centerline of the flange of buildup H or I members at the contact surface (referenced to neutral axis) shall be 1/4 in. [6 mm] maximum.

**7.2.5.4** The maximum deviation from the specified depth for welded built up beams and girders, measured at the web centerline, shall be ±1/2 in. [13 mm] for depths up to 72 in. [1800 mm]. For depths over 72 in. [1800 mm], the maximum deviation shall be +3/4 in. [20 mm] to –1/2 in. [13 mm].

**7.2.6** Re-entrant corners, except for the corners of weld-access cope holes adjacent to a flange, shall be filleted to a radius of no less than 3/4 in. [20 mm]. The fillet and its adjacent cuts shall meet without offset or cutting past the point of tangency.

### 7.3 Visual Inspection and Repair of Plate and Wrought Steel Products

**7.3.1** In the repair and the determination of the limits of visible internal discontinuities on rolled, sheared, or oxygen cut edges, the amount of metal removed shall be the minimum necessary to remove the discontinuity, but not to exceed the permissible limit given in Table 7. Material cut edges may exist at any angle with respect to the rolling direction. All repairs of discontinuities by welding shall conform to the applicable provisions of this specification.

**7.3.2** The limits of acceptability and the repair of visually observed edge discontinuities shall be in accordance with Table 7. The length of discontinuity is the visible length dimension on the material edge, and the depth is the distance that the discontinuity extends into the material from the edge.

**7.3.3** Discontinuities over 1 in. [25 mm] in length and in depth, when discovered during either visual inspection of cut surfaces or nondestructive examination of welded joints, shall be evaluated further. The following procedures are recommended:

(1) Where discontinuities, such as W, X, or Y in Figure 8 are observed prior to completing the joint, the size and shape of discontinuity shall be determined by ultrasonic inspection. The area of the discontinuity shall be determined as the area of total loss of back reflection when examined in accordance with the procedure section of ASTM A 435.

(2) For acceptance of W, X, or Y discontinuities, the area of a single discontinuity or the aggregate area of



Copyright American Welding Society
Provided by IHS under license with AWS
No reproduction or networking permitted without license from IHS
Not for Resale

**Table 7**
**Limits on Acceptability and Repair of Edge Discontinuities in Cut Surfaces (see 7.3.2)**

| Size of Discontinuity | | |
|---|---|---|
| Length, in. [mm] | Depth, in. [mm] | Repair Required |
| ≤ 1 [25] | Unspecified | None; need not be explored. |
| > 1 [25] | ≤ 1/8 [3] | None; depth should be explored per Note (1). |
| > 1 [25] | > 1/8 [3] to ≤ 1/4 [6] | Remove; repair welding not required. |
| > 1 [25] | > 1/4 [6] to ≤ 1 [25] | Completely remove and repair weld as limited by Note (2). |
| > 1 [25] | > 1 [25] | Refer to 7.3.3. |

Notes:
(1) A spot check of 10% of the discontinuities on the edge in question should be explored by grinding to determine depth. If the depth of any one of the discontinuities explored exceeds 1/8 [3 mm], then all of the discontinuities remaining on that edge shall be explored by grinding to determine depth. If none of the discontinuities explored in the 10% spot check has a depth exceeding 1/8 in. [3 mm], then the remaining of the discontinuities on that edge need not be explored.
(2) Aggregate length of welding shall not exceed 20% of the length of the plate edge being repaired.

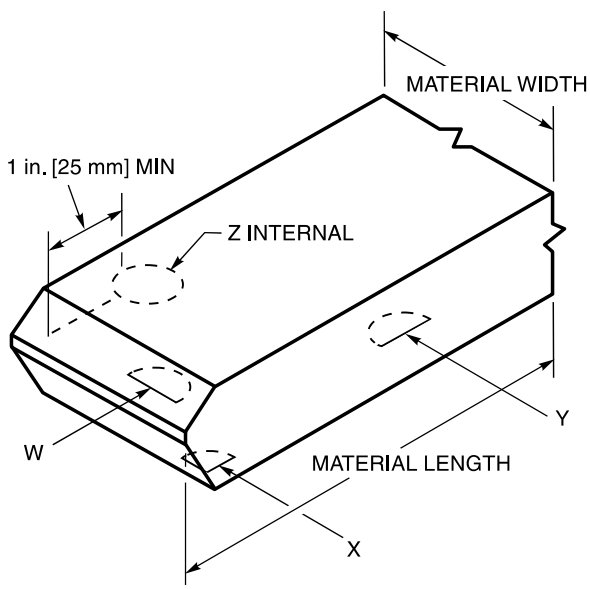


**Figure 8—Edge Discontinuities in Cut Material (see 7.3.3)**

multiple discontinuities shall not exceed 4% of the cut material area (length × width) with the following exception: if the width of discontinuity or the aggregate width of discontinuities on any transverse section, as measured perpendicular to the cut material length, exceeds 20% of the cut material width, the maximum allowable area shall be reduced by the percentage amount of the width exceeding 20%. For example, if a discontinuity is 30% of the cut material width, the percentage area of discontinuity cannot exceed 4 minus 4 × (0.30–0.20), or 3.6% of the cut material area. The discontinuity on the edge of the plate shall be gouged out to a depth of 1 in. [25 mm] beyond its intersection with the surface by chipping, air carbon arc gouging, or grinding, and then blocked off by welding in layers not exceeding 1/8 in. [3 mm] in thickness for at least the first four layers.

(3) Repair of an internal discontinuity, Z, in Figure 8 is not required if it does not exceed the allowable area in 7.3.3(2), is discovered after the joint has been completed, and is 1 in. [25 mm] or more from the toe of the weld as measured on the cut material surface. If a Type Z discontinuity is less than 1 in. [25 mm] from the face of the weld, it shall be removed to a distance of 1 in. [25 mm] from the fusion zone of the weld by chipping, gouging or grinding. It shall then be blocked by welding in layers not exceeding 1/8 in. [3 mm] in thickness for at least the first four layers.

(4) If the area of the discontinuity W, X, Y, or Z exceeds the allowable in 7.3.3(2), the cut material or subcomponent shall be either rejected and replaced or repaired at the discretion of the Design Engineer.

(5) The aggregate length of weld repair shall not exceed 30% of the length of the cut surface without approval of the Design Engineer.

(6) All repairs shall be in accordance with this specification. Gouging of a discontinuity may be done from either the cut material surface or the edge.

### 7.4 Assembly

**7.4.1** Parts to be joined by fillet welds shall be brought as close together as practicable at the joint. Root cracking may occur in a fillet weld if there is no root opening between the parts (e.g., surfaces machined to



Copyright American Welding Society
Provided by IHS under license with AWS
No reproduction or networking permitted without license from IHS
Not for Resale

bear). It may be necessary to provide a small root opening, in such cases, prior to welding. In any case, the root opening between parts shall not exceed 1/8 in. [3 mm] for sections up to 2 in. [50 mm] in thickness. When the root opening between shapes or plates of 2 in. [50 mm] or more in thickness cannot be closed to meet this tolerance, a maximum root opening of 3/16 in. [5 mm] is acceptable if a sealing weld or suitable backing material[6] is used. If the root opening is 1/16 in. [2 mm] or greater, the leg of the fillet weld shall be increased by the amount of the separation, or the contractor shall demonstrate that the required effective throat has been obtained.

The separation between the faying surfaces of lap joints and butt joints with a backing shall not exceed 1/16 in. [2 mm]. Deviations from these limits shall be approved by the Design Engineer.

**7.4.2** Parts to be joined by partial joint penetration groove welds parallel to the length of the member (bearing joints excepted) shall be brought as close together as practicable. The root opening between parts shall not exceed 1/8 in. [3 mm]. If the root opening between rolled shapes or plates of 2 in. [50 mm] or greater in thickness cannot be closed sufficiently to meet this tolerance, a maximum gap of 3/16 in. [5 mm] is acceptable provided (1) a sealing weld or suitable backing material is used and (2) the final weld meets the requirements for effective throat. Tolerances for bearing joints shall be in accordance with the applicable contract specification or the Manufacturer's standard if no tolerances are included in the contract. Deviations from these limits shall be approved by the Design Engineer.

**7.4.3** Parts to be joined at butt joints shall be carefully aligned. Where the parts are effectively restrained against bending due to eccentricity in alignment, an offset not exceeding 10% of the thickness of the thinner part joined, but in no case more than 0.18 in. [4.5 mm], may be permitted as a departure from the theoretical alignment. In correcting misalignment in such cases, the slope of the drawn-in parts shall not exceed 1 to 24. Measurement of offset shall be based upon centerline of parts, unless otherwise shown on the drawing. Deviations from these limits shall be approved by the Design Engineer.

**7.4.4** Dimensions of the cross section of groove weld joint preparations that vary from those shown on the detail drawings by more than the tolerances given in Table 8 shall be referred to the Design Engineer for acceptance. Exceptions are grooves for electroslag and electrogas welds.

6. Backing may be flux, glass tape, iron powder, or similar materials. Sealant (root) passes should be made with low-hydrogen covered electrodes or other arc welding processes.

**Table 8**
**Tolerances for Groove Weld Joint Preparations for Arc Welding (see 7.4.4)**

| | Root Not Gouged | | Root Gouged | |
|---|---|---|---|---|
| | in. | mm | in. | mm |
| Root face | ±1/16 | ±2 | Not limited | |
| Root opening with other than steel backing | ±1/16 | ±2 | ±1/16 | ±2 |
| Root opening with steel backing | +1/4 | +6 | Not applicable | |
| Groove angle | +5° | | +10°, –5° | |

**7.4.5** Grooves produced by gouging shall be in accordance with the requirements for processes and filler metals of Section 8.

**7.4.6** Groove welds shall be terminated at the ends of a joint in a manner that will ensure sound welds. This should be done by the use of extension bars or run-off plates.

**7.4.7** Extension bars and run-off plates shall be removed upon completion of the welding, and the ends of the weld shall be finished smooth and flush with the edges of the abutting parts.

**7.4.8** The weld metal of groove welds made with steel backing strips shall be thoroughly fused with the backing. Steel backings shall be removed, where accessible, from welds that are transverse to computed stress, and the joints shall be ground or finished smooth.

**7.4.9** Members to be welded shall be brought into correct alignment and held in position by clamps, wedges, guy lines, struts, tack welds, or other suitable devices until welding has been completed. The use of jigs and fixtures is recommended where practicable. Suitable allowances shall be made for warpage and shrinkage.

**7.4.10** Steel backing shall be continuous for the full length of a weld. Welded butt joints in a fabricated steel backing shall have complete joint penetration, and the joints shall be welded prior to placement of the backing.

**7.4.11** Caulking of welds is not permitted.

**7.4.12 Tack Welds**

**7.4.12.1** Tack welds shall be subject to the same quality requirements as the final welds.



Copyright American Welding Society
Provided by IHS under license with AWS
No reproduction or networking permitted without license from IHS
Not for Resale

**7.4.12.2** Tack welds which are incorporated into the final weld shall be made with electrodes meeting the requirements of the final weld. Multipass tack welds shall have cascaded ends. Tack welds shall be cleaned prior to depositing additional weld metal.

**7.4.12.3** Tack welds not incorporated into final welds shall be removed.

**7.4.13 Arc Strikes**. Arc strikes outside the area of permanent welds should be avoided on any base metal. Cracks or blemishes caused by arc strikes shall be ground to a smooth contour and examined to ensure soundness (see 12.2.2).

### 7.5 Control of Distortion and Shrinkage Stresses

**7.5.1** The procedure and welding sequence for assembling and joining parts of a structure or of built up members and for welding reinforcing parts to members, shall be designed to minimize distortion and shrinkage.

**7.5.2** When practicable, all welds shall be deposited in a sequence that will balance the applied heat while welding progresses.

**7.5.3** A program for welding sequence and distortion control shall be provided where shrinkage stresses or distortion are likely to affect the adequacy of the structure.

**7.5.4** Joints that are expected to produce large shrinkage should usually be welded with as little restraint as possible before other joints that are expected to cause less shrinkage are welded.

**7.5.5** Peening may be used on intermediate weld layers for control of shrinkage stresses in thick welds to prevent cracking (see 7.8). No peening shall be done on the root pass. Peening of the final weld layer shall be for fatigue enhancement purposes only and shall be done according to an approved written procedure (see 7.8.3).

**7.5.6** In making welds under conditions of severe external shrinkage restraint, the welding shall be carried continuously to completion or to a point that will ensure freedom from cracking before the joint is allowed to cool below the minimum specified preheat temperature. Where preheat and interpass temperatures are not specified, welding shall continue to a point where freedom from cracking is assured.

**7.6 Stress Relief.** Where required by the contract drawings or specifications, welded assemblies shall be stress relieved.

**7.6.1** All stress relief operations shall follow an approved written procedure.

**7.6.2** Localized stress relieving may be employed, subject to approval by the Design Engineer, when it is impractical to stress relieve the entire weldment. A written procedure shall address the variables given in 7.6.3.

**7.6.3** The procedures for furnace stress relief shall address the following:

(1) Temperature at the start of the thermal cycle.

(2) Rate of heating to temperature.

(3) Maximum allowable variation of temperature throughout the portion of the part being heated.

(4) Maximum temperature tolerance at stress relief temperature.

(5) Holding time at stress relief temperature.

(6) Rate of cooling to a temperature suitable for removal of work from the furnace.

(7) The thermocouples shall have surface contact with the weldment and be shielded from direct impingement of the heat source. The records shall include the location, calibration and thermal chart of each thermocouple, along with traceable weldment documentation. The records and data shall become part of the weldment documentation.

(8) Support of the weldment to minimize sagging and distortion.

(9) Spacing of multiple items so all pieces will heat uniformly.

(10) Use of baffles or insulating material to protect the weldment from direct impingement of the heat source.

**7.6.4** Stress relieving of weldments of A514, A517, A709 Grades 100 and 100W, and A710 steels is not recommended. Stress relieving may be necessary for those applications where weldments must retain dimensional stability during machining or where stress corrosion may be involved, neither condition being unique to weldments involving A514, A517, A709 Grades 100 and 100W, and A710 steels. However, the results of notch toughness tests have shown that stress relieving may actually impair weld metal toughness, and intergranular cracking may sometimes occur in the grain-coarsened region of the weld heat affected zone. Such steels should only be stress relieved after consultation with the steel producer and in strict accordance with the producer's recommendations.

*Precautionary Note: Consideration must be given to possible distortion due to stress relief.*

### 7.7 Vibratory Conditioning

**7.7.1** Vibratory conditioning to obtain dimensional stability of the weldment may be employed with the approval of the Engineer. The conditioning shall be done in accordance with the recommendations of the manufacturer of the vibratory equipment. It shall not be substituted for thermal stress relief.



Copyright American Welding Society
Provided by IHS under license with AWS
No reproduction or networking permitted without license from IHS
Not for Resale

**7.7.2** The conditioning process shall be covered by a written procedure.

**7.8 Peening.** Shot and mechanical peening provide for improved fatigue life in the weld joint as a result of the surface material being placed in compression.[7, 8, 9] Mechanical peening can be applied to intermediate weld passes to reduce residual stresses, cracking, and distortion. All peening shall be done using an approved written procedure. These guidelines are based on experience with carbon steel.

**7.8.1 Controlled Shot Peening.** Controlled shot peening may be used on external surfaces to improve fatigue life. Controlled shot peening procedures shall include Almen intensity, shot size, pressure, and percent coverage.

**7.8.2 Hammer Peening.** Hammer peening may be used on external surfaces to improve fatigue life. Peening should be controlled to prevent introducing stress concentrations to, or cracking of, the weld or base metal. Controlled air hammer peening procedures shall specify hammer size, peening tool radius, air pressure, and extent and density of coverage (see 7.8.4).

**7.8.3 Peening Applications**

(1) No peening shall be done on the root pass.

(2) Hammer or needle peening may be used on intermediate weld layers for control of shrinkage stresses in thick welds to prevent cracking.

(3) Peening of the surface layer of the weld and the base metal at the edges of the weld is permitted for fatigue life improvement. Under controlled conditions, both shot and mechanical peening places the exposed material in compression which reduces residual tensile stresses at the weld surface, the toe of the weld, and the base metal adjacent to the weld.

(4) All slag shall be removed prior to peening. The use of manual slag hammers, chisels, and lightweight tools such as needle descaling guns for the removal of slag and spatter is permitted, but is not considered peening.

**7.8.4 Specification for Pneumatic Hammer Peening for Fatigue Life Improvement.** Peening of weld toes shall be performed with the use of a small pneumatic hammer (Ingersoll #2 or equivalent) and peening tool as shown in Figure 9(A). All welds shall pass magnetic particle examination prior to peening, followed by a second magnetic particle examination after peening.

The peening tool shall be made from a chisel or other tool designed for the pneumatic hammer. The tool tip shall conform to the dimensions shown in Figure 9(A). All sharp edges and burrs shall be removed and the tool shape maintained in this geometric shape and condition.

Best peening results will be obtained by operating the pneumatic hammer at approximately 25 psi [1.7 bar] air pressure. The axis of the hammer shall be perpendicular to the longitudinal axis of the weld toe and inclined 60° to 70° above the weld toe plane as shown in Figure 9(B). Peening is done by slowly moving the peening tool of an operating hammer along the weld toe. Peening shall continue until the weld toe becomes smooth (absence of weld ripples), approximately three to four passes at 30 in./min [760 mm/min]. The depth of indentation due to peening should be approximately 1/32 in. [1 mm] to 1/16 in. [2 mm].

Peened welds, after passing the second magnetic particle examination, have increased fatigue strength equal to the next higher stress category (see Table 3) for the applicable detail (see Table 4 and Figure 1). However, the stress category for peened welds shall not exceed category B.

# 8. Processes and Filler Metals

## 8.1 General

### 8.1.1 Filler Metal Requirements

**8.1.1.1** The electrode, electrode-flux combination, or other filler metal for making complete joint penetration groove welds shall be in accordance with Table 9 when matching weld metal is required by Table 2.

**8.1.1.2** The electrode, electrode-flux combination, or other filler metal for complete joint penetration or partial joint penetration groove welds and for fillet welds may provide lower strength weld metal, as permitted in Table 2. The allowable stress in the weld metal shall not exceed that allowed in Table 2.

**8.1.2 Preheat and Interpass Temperature Requirements.** Preheat and interpass temperatures shall be in accordance with Table 10 for the welding process being used and for the higher strength base metals being welded.

**8.1.3 Heat Input Control for Quenched and Tempered Steel.** When quenched and tempered steels are welded, the heat input shall be restricted in conjunction with the maximum preheat and interpass temperatures permitted for the metal thickness. The heat input limitations shall be in accordance with the steel producer's rec-

7. Bremen, U., Smith, I. F. C., and Hirt, M. A., *Crack Growth Behavior in a Welded Joint Improved by Residual Stress Method*. International Conference: Fatigue of Welded Construction, Ed., Maddox, S. J. The Welding Institute: 1987.

8. Booth, G. S., *Improving the Fatigue Performance of Welded Joints*. The Welding Institute: 1983.

9. Metal Improvement Company, Inc. *Shot Peening Application, Seventh Edition*.



Copyright American Welding Society
Provided by IHS under license with AWS
No reproduction or networking permitted without license from IHS
Not for Resale

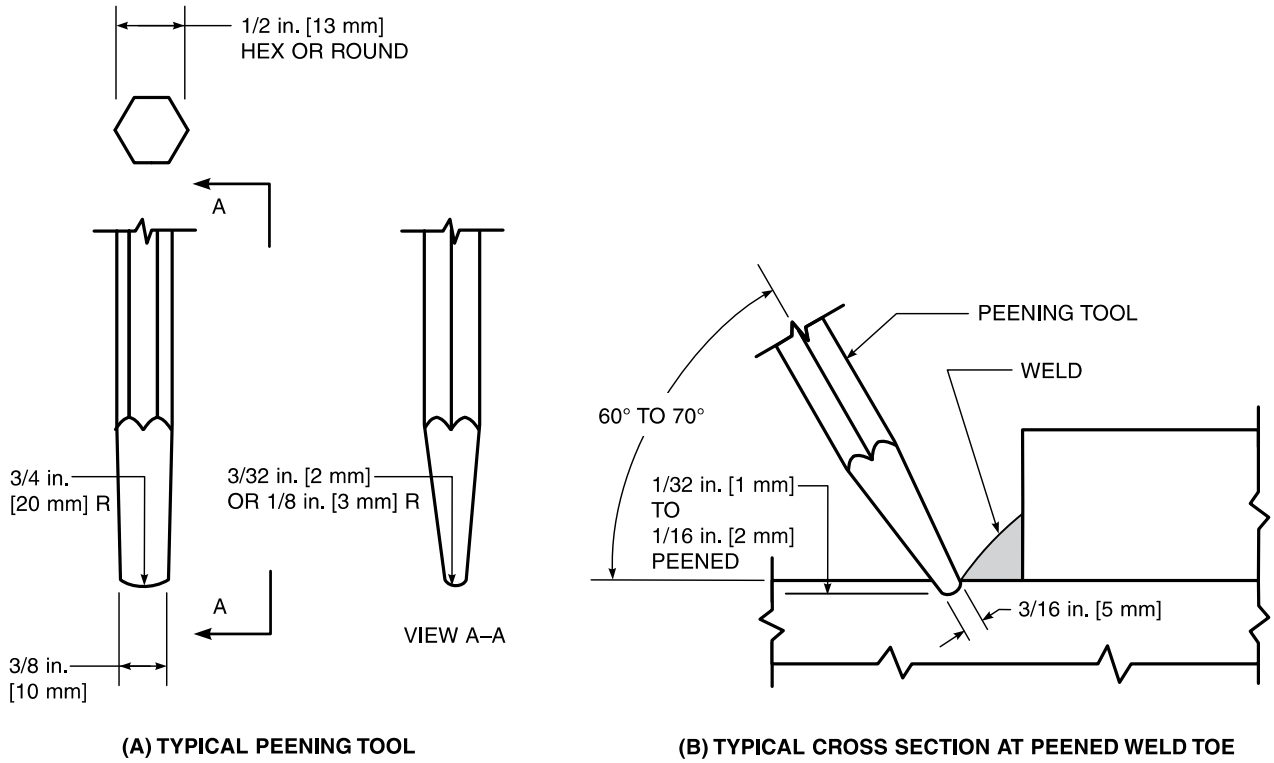


**Figure 9—Pneumatic Hammer Peening (see 7.8.4)**

ommendations. The use of stringer beads to avoid overheating is strongly recommended. Oxygen gouging of quenched and tempered steel is not permitted.

**8.1.4 Backing for Groove Welds.** Materials used for backing of groove welds may be steel, neutral submerged arc welding flux, nonfusible backup bars, or commercially available tapes made specifically for this purpose. The backing material employed shall not alter the weld metal composition, and the joints shall meet the requirements of Section 6, Weld Joint Design.

### 8.2 Shielded Metal Arc Welding (SMAW)

#### 8.2.1 Electrodes for Shielded Metal Arc Welding

**8.2.1.1** Electrodes for shielded metal arc welding shall conform to the requirements of either AWS A5.1, *Specification for Carbon Steel Electrodes for Shielded Metal Arc Welding*, or AWS A5.5, *Specification for Low-Alloy Steel Electrodes for Shielded Metal Arc Welding*, whichever is applicable.

**8.2.1.2** All electrodes having low-hydrogen coverings conforming to AWS A5.1 shall be purchased in hermetically sealed containers, or shall be dried for at least two hours between 500°F [260°C] and 800°F [425°C] before being used. Electrodes having low-hydrogen coverings conforming to AWS A5.5 shall be purchased in hermetically sealed containers, or shall be dried for at least one hour at a temperature of between 700°F [370°C] and 800°F [425°C] before being used, in accordance with the recommendations of AWS A5.5. Electrodes shall be dried prior to use if the hermetically sealed container shows evidence of damage.

Immediately after opening of hermetically sealed containers or removal from drying ovens, the low-hydrogen electrodes shall be consumed or stored in ovens held at a temperature of at least 250°F [120°C]. E70XX or E70XX-X electrodes that are not used within four hours, E80XX-X within two hours, E90XX-X within one hour, E100XX-X or E110XX-X within one half hour, and E70XXR, E7018M, or E70XXHZR within nine hours after removal from hermetically sealed containers or from a drying or storage oven shall be redried before use. Electrodes shall be redried not more than one time. Electrodes that are, or have been, wet shall not be used.

**8.2.1.3** The classification and size of electrode, arc length, voltage, and amperage shall be suited to the



Copyright American Welding Society
Provided by IHS under license with AWS
No reproduction or networking permitted without license from IHS
Not for Resale

**Table 9**
**Matching Filler Metal Requirements**[(1), (2), (3)]

| Base Metal[(4)] | Welding Process | | | |
|---|---|---|---|---|
| | SMAW | SAW | GMAW | FCAW |
| Class I<br>Class II | AWS A5.1 or A5.5<br>E60XX, E70XX<br>E70XX-X | AWS A5.17 or A5.23<br>F6XX-EXXX<br>F7XX-EXXX<br>F7XX-EXX-XX | AWS A5.18<br>ER70S-X<br><br>AWS A5.18 or A5.28<br>E70C-XX | AWS A5.20 or A5.29<br>E6XT-X, E6XTX-X, E7XT-X, or E7XTX-X<br>(except -2, -3, -10, -13, -14, or GS)[(5)] |
| Class III | AWS A5.1 or A5.5[(1)]<br>E70XX[(6)]<br>E70XX-X[(6)] | AWS A5.17 or A5.23<br>F7XX-EXXX<br>F7XX-EXX-XX | AWS A5.18<br>ER70S-X<br><br>AWS A5.18 or A5.28<br>E70C-XX | AWS A5.20 or A5.29<br>E7XT-X or E7XTX-X<br>(except -2, -3, -10, -13, -14, or GS)[(5)] |
| Class IV<br>UTS > 70 ksi<br>[485 MPa] | AWS A5.5<br>E80XX-X | AWS A5.23<br>F8XX-EXX-XX | AWS A5.28<br>ER80S-X<br>E80C-XX | AWS A5.29<br>E8XTX-X |
| UTS ≤ 70 ksi<br>[485 MPa] | AWS A5.1 or A5.5<br>E70XX-X[(6)]<br>E70XX[(6)] | AWS A5.17 or A5.23<br>F7XX-EXX<br>F7XX-EXX-X | AWS A5.18<br>ER70S-X<br>E70C-XX | AWS A5.20<br>E7XT-X or E7XTX-X<br>(except -2, -3, -10, -13, -14, or GS)[(5)] |
| Class V Thickness<br>< 2.5 in. [65 mm] | AWS A5.5<br>E110XX-X[(6)]<br>E11018M | AWS A5.23<br>F11XX-EXX-XX | AWS A5.28<br>ER110S-X | AWS A5.29<br>E11XTX-X |
| ≥ 2.5 in. [65 mm] | E100XX-X[(6)]<br>E10018M | F10XX-EXX-XX | ER100S-X | E10XTX-X |

Notes:
(1) The use of the same type of filler metal having the next higher strength classification as listed in AWS filler metal specifications is permitted. A filler metal of a lower strength may be used where the Engineer has stipulated less than 100% joint efficiency.
(2) When welds are to be thermally stress relieved, the deposited weld metal shall not exceed 0.05% vanadium.
(3) Filler metals of alloy groups B3, B3L, B4L, B5, B6, B6L, B7, B7L, B8, B8L, or B9, in AWS A5.5, A5.23, A5.28, or A5.29, are not prequalified for use in the as-welded condition.
(4) In joints involving base metals of different yield points or strengths, filler metals applicable to the lower strength metal may be used.
(5) These electrode classifications do not have yield strength or elongation requirements specified in AWS A5.20. If E7XT-2 filler metals are qualified by prototype testing (see 9.5.3), this qualifies the use of these filler metals for production. However, it is recommended that these classifications and the E7XT-11 classification from AWS A5.20 be limited to weld thicknesses less than 1/2 in. [13 mm].
(6) Low hydrogen classifications only (i.e., EXX15, EXX15-XX, EXX16, EXX16-XX, EXX18, EXX18-XX, EXX28, EXX48).

thickness of the base metal, type of groove, welding position, and other circumstances attending the work.

**8.2.1.4** The maximum size of electrodes shall be as follows:

(1) 5/16 in. [8 mm] for all welds made in the flat position, except for root passes;

(2) 1/4 in. [6 mm] for horizontal fillet welds;

(3) 1/4 in. [6 mm] for root passes of fillet welds made in the flat position and groove welds made in the flat position with a backing and a root opening of 1/4 in. [6 mm] or more;

(4) 5/32 in. [4 mm] for welds made with EXX14 and low-hydrogen electrodes in the vertical and overhead positions;

(5) 3/16 in. [5 mm] for root passes of groove welds and for all other welds not included under (1), (2), (3), and (4).

**8.2.2** The minimum thickness of a root pass shall be large enough to avoid weld metal cracking.

**8.2.3** The maximum thickness of layers of fillet welds, other than root passes, and all layers of groove welds shall be the following:

(1) 1/4 in. [6 mm] for root passes of groove welds;



Copyright American Welding Society
Provided by IHS under license with AWS
No reproduction or networking permitted without license from IHS
Not for Resale

## Table 10
## Minimum Preheat and Interpass Temperatures

| Weldability Classification of Base Metal | Welding Process | Thickness of Thickest Part at Point of Welding | | Minimum Temperature[(1),(2)] | |
|---|---|---|---|---|---|
| | | in. | mm | °F | °C |
| I | Shielded metal arc welding with other than low-hydrogen electrodes | ≤ 3/4 | ≤ 20 | None[(1)] | |
| | | > 3/4 to ≤ 1-1/2 | > 20 to ≤ 40 | None[(1)] | |
| | | > 1-1/2 to ≤ 2-1/2 | > 40 to ≤ 65 | 50 | 10 |
| | | > 2-1/2 | > 65 | 200 | 95 |
| | Shielded metal arc welding with low-hydrogen electrodes, submerged arc welding, gas metal arc welding, flux cored arc welding | Up to 3/4 | ≤ 20 | None[(1)] | |
| | | > 3/4 to ≤ 1-1/2 | > 20 to ≤ 40 | None[(1)] | |
| | | > 1-1/2 to ≤ 2-1/2 | > 40 to ≤ 65 | None[(1)] | |
| | | > 2-1/2 | > 65 | 150 | 65 |
| II | Shielded metal arc welding with other than low-hydrogen electrodes | Up to 3/4 | ≤ 20 | None[(1)] | |
| | | > 3/4 to ≤ 1-1/2 | > 20 to ≤ 40 | 150 | 65 |
| | | > 1-1/2 to ≤ 2-1/2 | > 40 to ≤ 65 | 225 | 110 |
| | | > 2-1/2 | > 65 | 300 | 150 |
| II & III | Shielded metal arc welding with low-hydrogen electrodes, submerged arc welding, gas metal arc welding, flux cored arc welding | Up to 3/4 | ≤ 20 | None[(1)] | |
| | | > 3/4 to ≤ 1-1/2 | > 20 to ≤ 40 | 50 | 10 |
| | | > 1-1/2 to ≤ 2-1/2 | > 40 to ≤ 65 | 150 | 65 |
| | | > 2-1/2 | > 65 | 225 | 110 |
| IV | Shielded metal arc welding with low-hydrogen electrodes, submerged arc welding, gas metal arc welding, flux cored arc welding | ≤ 3/4 | ≤ 20 | 50 | 10 |
| | | > 3/4 to ≤ 1-1/2 | > 20 to ≤ 40 | 150 | 65 |
| | | > 1-1/2 to ≤ 2-1/2 | > 40 to ≤ 65 | 225 | 110 |
| | | > 2-1/2 | > 65 | 300 | 150 |
| V | Shielded metal arc welding with low-hydrogen electrodes, submerged arc welding with carbon or alloy steel wire, neutral or active flux,[(3)] gas metal arc welding, flux cored arc welding | ≤ 3/4 | ≤ 20 | 50 | 10 |
| | | > 3/4 to ≤ 1-1/2 | > 20 to ≤ 40 | 125 | 50 |
| | | > 1-1/2 to ≤ 2-1/2 | > 40 to ≤ 65 | 175 | 80 |
| | | > 2-1/2 | > 65 | 225 | 110 |
| | Submerged arc welding with carbon steel wire, alloy flux[(3)] | ≤ 3/4 | ≤ 20 | 50 | 10 |
| | | > 3/4 to ≤ 1-1/2 | > 20 to ≤ 40 | 200 | 95 |
| | | > 1-1/2 to ≤ 2-1/2 | > 40 to ≤ 65 | 300 | 150 |
| | | > 2-1/2 | > 65 | 400 | 205 |

Notes:

(1) When the base metal temperature is below 32°F [0°C], the base metal shall be preheated to at least 70°F [21°C] for a distance equal to the thickness of the part being welded, but not less than 3 in. [75 mm] both laterally and in advance of welding. This minimum temperature shall be maintained during welding. Preheat and interpass temperature shall be sufficient to prevent crack formation. Temperature above the minimum shown may be required for highly restrained welds. For quenched and tempered steel, the maximum preheat and interpass temperature should not exceed 400°F [250°C] for thicknesses up to 1-1/2 in. [40 mm] inclusive or 450°F [230°C] for greater thicknesses. When welding quenched and tempered steel, heat input should not exceed the producer's recommendation.

(2) In joints involving combinations of base metals, preheat shall be as specified for the higher strength steel being welded.

(3) Neutral flux: Flux whose primary purpose is to shield the weld metal.
Active flux: Flux whose primary purpose is to deoxidize the weld metal.
Alloy flux: Flux whose primary purpose is to alloy the weld metal. (See AWS A3.0 for complete definitions.)
AWS A5.17/A5.17M-97, Annex A6 contains more complete descriptions of these fluxes and their applications.



Copyright American Welding Society
Provided by IHS under license with AWS
No reproduction or networking permitted without license from IHS
Not for Resale

(2) 1/8 in. [3 mm] for subsequent layers of welds made in the flat position;

(3) 3/16 in. [5 mm] for subsequent layers of welds made in the vertical, overhead, and horizontal positions.

**8.2.4** The maximum size of both single-pass and root-pass fillet welds shall be the following:

(1) 3/8 in. [10 mm] in the flat position;

(2) 5/16 in. [8 mm] in horizontal and overhead positions;

(3) 1/2 in. [13 mm] in the vertical position.

**8.2.5** The progression of welding in the vertical position may be upward or downward, but only in the direction or directions for which the welder is qualified.

**8.2.6** Complete joint penetration groove welds that are made without the use of steel backing shall have the root of the first weld gouged or ground to sound metal before the second weld is started on the opposite side.

### 8.3 Submerged Arc Welding (SAW)

#### 8.3.1 General Requirements

**8.3.1.1** Submerged arc welding (SAW) may be performed with one or more single electrodes, one or more parallel electrodes, or combinations of single and parallel electrodes. The spacing between multiple arcs shall be such that the slag cover over the weld metal produced by a leading arc does not cool sufficiently to prevent proper fusion of the weld metal deposit from a following electrode. SAW with multiple electrodes may be used for any groove or fillet weld pass.

**8.3.1.2** The following subsections (8.3.1.3 through 8.3.1.7) governing the use of SAW are suitable for any steel included in Table 1, other than quenched and tempered steels. Concerning welding of quenched and tempered steels, it is necessary to comply with the steel producer's recommendations for maximum permissible heat input and preheat combinations. Such considerations shall include the additional heat input produced in simultaneous welding on two sides of a common member.

**8.3.1.3** The size of the electrode shall not exceed 1/4 in. [6 mm] diameter.

**8.3.1.4** Surfaces on which submerged arc welds are to be deposited and adjacent faying surfaces shall be clean and free of moisture and other contaminants that may have an adverse effect on weld quality.

**8.3.1.5** Roots of groove or fillet welds may be backed with copper, flux, glass tape, iron powder, or similar materials to prevent melt-through, or be sealed by means of root passes deposited using a low-hydrogen welding procedure. Use caution to avoid letting the welding arc strike the copper backing.

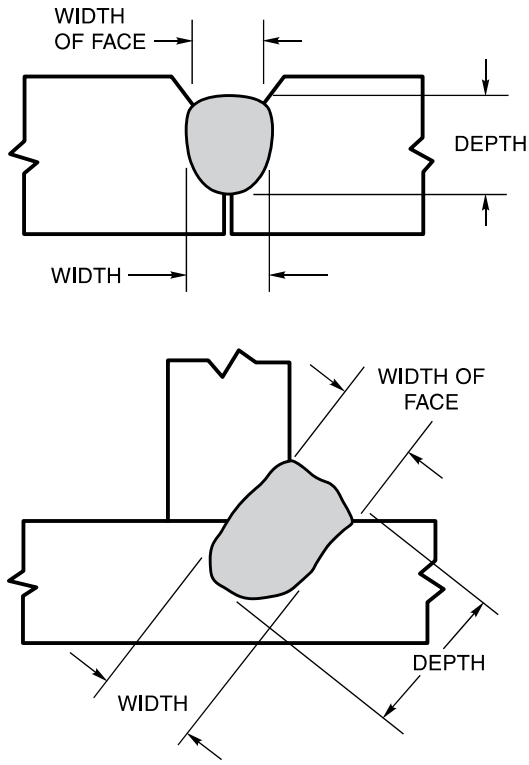


**Figure 10—Unacceptable Submerged Arc Weld Pass where the Depth and Width Exceed the Face Width**

**8.3.1.6** Neither the depth nor the maximum width in the cross section of the weld metal deposited in each weld pass shall exceed the width of the face of that weld pass or throat cracking may occur (see Figure 10).

**8.3.1.7** Tack welds located in the roots of joints requiring specific root penetration, or in the form of fillet welds 3/8 in. [10 mm] and under in size, shall not produce objectionable changes in appearance of the weld surface or result in decreased penetration. Tack welds that will cause unsatisfactory weld characteristics shall be reduced in size by any suitable means before welding. Tack welds in the root of a joint with steel backing of less than 5/16 in. [8 mm] thick shall either be reduced in size by any suitable means before welding or made continuous for the full length of the joint using a low-hydrogen welding procedure. After any tack weld is reduced in size, care shall be taken to clean the weld groove before proceeding.

**8.3.2 Electrodes and Fluxes.** The electrode and flux combination used for submerged arc welding of a steel



Copyright American Welding Society
Provided by IHS under license with AWS
No reproduction or networking permitted without license from IHS
Not for Resale

shall conform to the requirements of AWS A5.17, *Specification for Carbon Steel Electrodes and Fluxes for Submerged Arc Welding* or of AWS A5.23, *Specification for Low Alloy Steel Electrodes and Fluxes for Submerged Arc Welding*, whichever is applicable.

**8.3.3 Condition of Flux.** Flux used for SAW shall be dry and free of contamination from dirt, mill scale, or other foreign material. Flux shall be purchased in packages that can be stored under normal conditions for at least six months without affecting the welding characteristics of the flux or the weld properties. Flux from damaged packages shall be discarded or dried at a minimum temperature of 250°F [120°C] for one hour before use. Flux shall be placed in the dispensing system immediately upon opening a package. Before using flux that has been exposed to the atmosphere in an open package, the top 1 in. [25 mm] shall be discarded. Flux that has been wet shall not be used.

SAW flux that has not been melted during the welding operation may be reused after recovery by vacuuming, catch pans, sweeping, or other means. The welding fabricator shall have a system for collecting unmelted flux, adding new flux, and welding with the mixture of these two, such that the flux composition and particle size distribution at the weld puddle are relatively constant. Recrushed slag may be used provided it has its own marking, using the recrusher's name and trade designation. In addition, each dry batch or dry blend (lot) of flux, as defined in AWS A5.01, *Filler Metal Procurement Guidelines*, shall be tested in conformance with Schedule I of AWS A5.01 and classified by the contractor or recrusher per AWS A5.17 or A5.23, as applicable.

**8.3.4 Procedures for SAW with a Single Electrode**

**8.3.4.1** Submerged arc welds may be made in either the flat or horizontal position. Single-pass fillet welds made in the horizontal position shall not exceed 5/16 in. [8 mm] in size.

**8.3.4.2** The thickness of weld layers, except root and surface layers, shall not exceed 1/4 in. [6 mm]. When the root opening is 1/2 in. [13 mm] or greater, a multiple-pass stringer bead (split layer) technique shall be used. The stringer bead (split layer) technique shall also be used in making multiple-pass welds when the width of the layer will exceed 5/8 in. [16 mm].

**8.3.4.3** The welding conditions, including current, arc voltage, and speed of travel, shall ensure that each weld pass will have complete fusion with the adjacent base and weld metals, and have no overlap or unacceptable undercut. The maximum welding current used to make any weld pass with fusion to both faces of a weld groove shall be 800 A, except that the final layer of weld metal may be made using higher welding current. The maximum welding current to be used for fillet welds in the flat position shall be 1000 A.

**8.3.5 Procedures for SAW with Multiple Electrodes**

**8.3.5.1** Submerged arc welds made with multiple electrodes may be made in either the flat or horizontal position. Single-pass, multiple-arc fillet welds made in the horizontal position shall not exceed 1/2 in. [13 mm] in size.

**8.3.5.2** The thickness of weld layers is not limited. In making the root pass of a groove weld, either single or multiple electrodes may be used. Backing strips or root faces of the groove shall be of adequate thickness to prevent melt-through. When the width of a groove in which a layer of weld metal is to be deposited exceeds 1/2 in. [13 mm], multiple electrodes shall be displaced laterally, or a stringer bead (split layer) technique shall be used to assure complete fusion. A stringer bead (split layer) technique shall be employed when only two electrodes in tandem are used and the width of a previously deposited layer exceeds 1 in. [25 mm].

**8.3.5.3** The welding conditions, including current, arc voltage, speed of travel, and relative location of electrodes, shall ensure that each pass will have complete fusion with the adjacent base and weld metals, and have no depressions or unacceptable undercut. Concavity of initial weld passes shall not be excessive to avoid cracking in roots of joints that are under restraint.

**8.3.5.4** The maximum welding current used in making a groove weld shall be as limited by the allowable heat input for quenched and tempered materials. For other materials, the following limitations shall apply:

(1) 700 A for any single electrode or for multiple electrodes when making a root pass of a multiple-pass weld in a groove having no root opening.

(2) 750 A for any single electrode or 900 A for multiple electrodes when making a root pass in a groove having steel backing or a spacer bar.

(3) 1000 A for any single electrode or 1200 A for multiple electrodes for all other passes except the root pass and the final layer.

(4) Any suitable amperage for the final pass or layer.

**8.3.5.5** The maximum welding current to be used when making a fillet weld shall be 1000 A for a single electrode or 1200 A for multiple electrodes or as limited by the allowable heat input for quenched and tempered materials.

**8.3.5.6** Multiple electrodes may be used in the root of groove or fillet welds using a leading gas metal arc electrode with gas shielding followed by multiple submerged arc electrodes provided that (1) the gas metal arc welding conforms to the requirements of 8.4, and (2) the



Copyright American Welding Society
Provided by IHS under license with AWS
No reproduction or networking permitted without license from IHS
Not for Resale

spacing between the leading gas metal arc electrode and the first following submerged arc electrode is not more than 15 in. [375 mm].

## 8.4 Gas Metal Arc Welding (GMAW) and Flux Cored Arc Welding (FCAW)

### 8.4.1 Consumables

**8.4.1.1** The electrodes and shielding medium for gas metal arc welding (GMAW) or flux cored arc welding (FCAW) for producing weld metal with a minimum specified yield strength of 60 ksi [415 MPa] or less shall conform to the requirements of AWS A5.18, *Specification for Carbon Steel Electrodes and Rods for Gas Shielded Arc Welding*, AWS A5.20, *Specification for Carbon Steel Electrodes for Flux Cored Arc Welding*, or AWS A5.29, *Specification for Low Alloy Steel Electrodes for Flux Cored Arc Welding,* as applicable.

**8.4.1.2** Weld metal having a minimum specified yield strength greater than 60 ksi [415 MPa] shall conform to the following requirements:

(1) The electrodes and shielding gas for GMAW for producing weld metal with a minimum specified yield strength greater than 60 ksi [415 MPa] shall conform with AWS A5.28, *Specification for Low-Alloy Steel Filler Metals for Gas Shielded Arc Welding*.

(2) The electrodes and shielding gas for flux cored arc welding for producing weld metal with a minimum specified yield strength greater than 60 ksi [415 MPa] shall conform to AWS A5.29, *Specification for Low Alloy Steel Electrodes for Flux Cored Arc Welding*.

**8.4.1.3** When requested by the Design Engineer, the fabricator shall furnish the electrode manufacturer's certification that the filler metal product being used met the requirements for classification in accordance with the applicable AWS specifications. The electrode manufacturer's recommended welding process conditions and parameters including amperage, voltage and shielding gas (or lack of such) shall be followed.

**8.4.2 Shielding Gas.** When a gas or gas mixture is used for shielding in any gas shielded process, it shall be a welding grade having a dew point of –40°F [–40°C] or lower (see AWS A5.32, *Specification for Welding Shielding Gases*).

**8.4.3 Prequalified Procedures for GMAW[10] and FCAW.** The requirements for prequalified procedures that are exempt from qualification testing are as follows:

10. Applies only when welding with the spray or globular modes of metal transfer. Prequalification does not apply to short-circuiting metal transfer.

**8.4.3.1** Electrodes shall be dry and in suitable condition for use.

**8.4.3.2** The maximum diameter of electrodes shall be 1/8 in. [3 mm] for the flat and horizontal positions, and 5/64 in. [2 mm] for the vertical and overhead positions.

**8.4.3.3** The maximum size of a fillet weld made in one pass shall be 1/2 in. [13 mm] for the flat and vertical positions, 3/8 in. [10 mm] for the horizontal position, and 5/16 in. [8 mm] for the overhead position.

**8.4.3.4** The maximum fill pass thickness shall be 1/4 in. [6 mm]. The maximum root pass thickness shall be 3/8 in. [10 mm] for the flat position, 5/16 in. [8 mm] for the horizontal and overhead positions, and 1/2 in. [13 mm] for the vertical position. The stringer bead (split layer) technique shall also be used in making all multipass welds (fillet or groove) when the width of the preceding layer exceeds 5/8 in. [16 mm].

**8.4.3.5** The welding conditions used shall ensure that each pass will have complete fusion with adjacent base metal and weld metal, and there will be no excessive overlap, porosity, or undercutting.

**8.4.3.6** Complete joint penetration groove welds made without the use of steel backing shall have the root of the first weld gouged to sound metal before the second weld is started from the opposite side of the joint.

**8.4.3.7** Backing may be used to prevent melt-through at the roots of fillet welds and partial penetration groove welds.

**8.4.3.8** Welding with external gas shielding shall not be done in a draft or wind having a velocity exceeding five miles per hour unless the weld is protected by a shelter. The shelter shall reduce the air velocity in the vicinity of the welding to that necessary to avoid loss of gas shielding.

## 8.5 Electroslag Welding (ESW) and Electrogas Welding (EGW)

### 8.5.1 General Requirements

**8.5.1.1** Electroslag Welding (ESW) and electrogas welding (EGW) of quenched and tempered steels is not permitted unless the heat-affected zone (HAZ) and weld are heat treated subsequent to welding to obtain the required mechanical properties.

**8.5.1.2** Prior to use, the Manufacturer shall prepare a welding procedure specification and qualify each procedure for the process to be used in accordance with the requirements of Section 9, Qualification. The welding procedure specification shall include the joint details, filler metal type and diameter, welding current and type,



Copyright American Welding Society
Provided by IHS under license with AWS
No reproduction or networking permitted without license from IHS
Not for Resale

voltage, speed of vertical travel (if not an automatic function of arc length or deposition rate), oscillation (traverse speed, distance, and dwell time), type of shielding (including flow rate and dew point of gas or type of flux), type of molding shoe, postweld heat treatment (if required), and other pertinent information.[11]

**8.5.2 Impact Test Requirements.** Impact tests shall be included in the welding procedure qualification.

**8.5.2.1** Five Charpy V-notch impact test specimens from the weld metal and five specimens from the HAZ shall be machined from the same weld test assembly made to determine weld joint properties.

**8.5.2.2** The impact specimens shall be machined and tested in accordance with ASTM E 23, *Standard Methods for Notched Bar Impact Testing of Metallic Materials*, or AWS B4.0 or B4.0M, *Standard Methods for Mechanical Testing of Welds*, for Charpy impact specimens.

**8.5.2.3** The longitudinal centerline of the specimens shall be transverse to the weld axis and shall be located as near as practicable to a point midway between the surface and center of thickness. The base of the notch shall be perpendicular to the surface. The standard 0.394 in. × 0.394 in. [10 mm × 10 mm] specimen shall be used where the thickness is 1/2 in. [13 mm] or greater.

**8.5.2.4** When computing the average value of the impact properties, the lowest value and highest value obtained for each set of five specimens tested shall be disregarded.

**8.5.2.5** The notched bar impact properties of the weld metal of the remaining three specimens shall be no less than the values in Table 11 when tested at 0°F [–18°C].

**8.5.3 All-Weld-Metal Tension Tests.** Prior to use, the fabricator shall demonstrate by appropriate tests that each combination of shielding media and filler metal will produce welds having the mechanical properties specified in the latest edition of AWS A5.25 or A5.26, or as listed in Table 12.

**8.5.4** Electrodes and consumable guide tubes shall be dry, clean, and in suitable condition for use.

11. The resistance of an electroslag or electrogas weld to centerline hot cracking is related to the angle at which the dendritic grains meet as solidification of the weld metal proceeds. This angle is determined by the shape of the molten weld pool. Generally, if the angle is acute (< 90°), the cracking resistance will be high. See the AWS *Welding Handbook*, Vol. 2, Welding Processes, Part 1, 9th Ed., pages 446–447 for more information.

**Table 11**
**Impact Property Requirements at 0°F [–18°C] for Electrogas and Electroslag Welds**

| Specimen Size | | Minimum Average Impact Energy | | Minimum Impact Energy | |
|---|---|---|---|---|---|
| in. | mm | ft-lb | J | ft-lb | J |
| 0.394 × 0.394 | 10.0 × 10.0 | 15.0 | 20.3 | 10.0 | 13.6 |

**8.5.5** A gas or gas mixture used as shielding for electrogas welding shall be of a welding grade and have a dew point of –40°F [–40°C], or lower (see AWS A5.32).

**8.5.6** The flux used for electroslag welding shall be dry and free of contamination from dirt, mill scale, or other foreign material. Flux from packages damaged in transit or handling shall be discarded or dried at a minimum temperature of 250°F [120°C] for one hour before use.

**8.5.7 Procedures for Electroslag and Electrogas Welding**

**8.5.7.1** When an externally supplied shielding gas is used, electrogas welding shall not be done in a draft or wind unless the weld area is protected by a shelter. This shelter shall be designed to reduce the wind velocity in the vicinity of the weld to conditions where the gas shielding is not disrupted.

**8.5.7.2** The type and diameter of the electrodes used shall meet the requirements of the welding procedure specification.

**8.5.7.3** Welds shall be started in such a manner as to permit sufficient heat buildup for complete fusion of the weld metal to the groove faces of the joint. Welds stopped at any point in the length of the joint shall be examined in accordance with Section 10, Weld Quality and Inspection, and repaired if necessary.

**8.5.7.4** Preheating of base metals is not normally required. However, welding shall not be performed when the base metal at the point of welding is below 32°F [0°C].

**8.5.7.5** Welds not meeting the quality requirements of Section 10 shall be repaired utilizing a qualified welding process.



Copyright American Welding Society
Provided by IHS under license with AWS
No reproduction or networking permitted without license from IHS
Not for Resale

**Table 12**
**All-Weld-Metal Tension Test Requirements for Electrogas and Electroslag Welds**

| Base Metal | Minimum Tensile Strength | | Minimum Yield Point | | Minimum Elongation, % in 2 in. [50 mm] |
|---|---|---|---|---|---|
| | ksi | MPa | ksi | MPa | |
| ASTM A 36 | 60 | 415 | 36 | 250 | 24 |
| ASTM A 242 or A 441, thickness: | | | | | |
| ≤ 3/4 in. [20 mm] | 70 | 485 | 50 | 345 | 22 |
| > 3/4 in. [20 mm] to ≤ 1-1/2 in. [40 mm] | 67 | 460 | 46 | 315 | 22 |
| > 1-1/2 in. [40 mm] to ≤ 4 in. [100 mm] | 63 | 435 | 42 | 290 | 24 |
| > 4 in. [100 mm] to 8 in. [200 mm] | 60 | 415 | 40 | 275 | 24 |
| ASTM A 572: | | | | | |
| Grade 42 | 60 | 415 | 42 | 290 | 24 |
| Grade 45 | 60 | 415 | 45 | 310 | 22 |
| Grade 50 | 65 | 450 | 50 | 345 | 21 |
| Grade 55 | 70 | 485 | 55 | 380 | 20 |
| Grade 60 | 75 | 515 | 60 | 415 | 18 |
| Grade 65 | 80 | 550 | 65 | 450 | 17 |
| ASTM A 588, thickness: | | | | | |
| ≤ 4 in. [102 mm] | 70 | 485 | 50 | 345 | 21 |
| > 4 in. [100 mm] to 5 in. [125 mm] | 67 | 460 | 46 | 315 | 21 |
| > 5 in. [125 mm] to 8 in. [200 mm] | 63 | 435 | 42 | 290 | 21 |

# 9. Qualification

## *Part A*
## *General Requirements*

### 9.1 Approved Procedures

**9.1.1** Joint welding procedures that conform in all respects to the provisions of Section 4, Base Metals; Section 6, Weld Joint Design; Section 7, Workmanship; and Section 8, Processes and Filler Metals, shall be deemed prequalified and are exempt from tests or qualifications, except that all groove and fillet weld procedures for weld metal and base metal with a minimum specified yield strength of 90 ksi [620 MPa] or higher shall be qualified prior to use by tests as prescribed in 9.2 of this section to the satisfaction of the Engineer.

*Note: The use of a prequalified joint welding procedure is not intended as a substitute for engineering judgment in the suitability of application of these joint welding procedures to a welded assembly or connection.*

**9.1.2** All prequalified joint welding procedure specifications (WPS) to be used shall be prepared by the Manufacturer, fabricator, or contractor, be in writing and signed by an authorized individual, and be available to those authorized to examine them. A suggested form showing the information required in a welding procedure specification is shown in Annex A. The welding parameters set forth in (1) through (4) of this subsection shall be specified on the written welding procedure specifications within the limitations of variables prescribed in 9.5 for each applicable process. Changes in these parameters, beyond those specified on the written welding procedure specification, shall be considered essential changes and shall require a new or revised written prequalified welding procedure specification.

(1) Amperage (wire feed speed),
(2) Voltage,
(3) Travel Speed, and
(4) Shielding Gas Flow Rate.

**9.1.3** A combination of qualified or prequalified joint welding procedures may be used without requalification, provided the limitations of essential variables applicable to each process are observed. This combination of joint welding procedures shall be written as a single welding procedure specification.

**9.1.4** Procedures previously qualified under earlier editions of this specification, AWS D1.1, *Structural Welding Code—Steel*, AWS B2.1, *Specification for Welding Procedure and Performance Qualification*, or



Copyright American Welding Society
Provided by IHS under license with AWS
No reproduction or networking permitted without license from IHS
Not for Resale

Section IX of the ASME *Boiler and Pressure Vessel Code* for equivalent welding shall be acceptable under this specification, subject to the limitations of variables in Section 9. In addition, Standard Welding Procedure Specifications (WPSs) published by the AWS Committee on Welding Qualification are acceptable, subject to the limitations of variables in Section 9. New qualifications shall be made in accordance with the requirements of this specification, or the latest edition of B2.1, subject to the limitations of variables in Section 9.

**9.2 Other Procedures.** Except for those procedures exempted in 9.1.1, joint welding procedures that are employed in executing contract work under this specification shall be qualified prior to use by tests as prescribed in Part B of this section to the satisfaction of both the Owner's appointed representative and the Manufacturer's designated representative responsible for welding. The Owner's appointed representative should accept evidence of previous qualification of any joint welding procedures to be employed.

**9.3 Welders, Welding Operators, and Tack Welders**

**9.3.1** All welders, welding operators, and tack welders to be employed to weld under this specification shall have been qualified by tests as prescribed in Parts C, D, and E, respectively, of this section or by AWS B2.1. Owner's representatives, at their discretion, should accept evidence of previous qualification (to other industry-recognized codes or specifications) of the welders, welding operators, and tack welders to be employed. A suggested form showing the information required is shown in Annex A.

**9.3.2** Radiographic examination of a welder's or welding operator's qualification test plate, or test pipe, may be made in lieu of the guided bend test prescribed in Parts C and D of this section.

**9.4 Qualification Responsibility.** Each Manufacturer or contractor shall conduct the tests required by this specification to qualify the welding procedures and the welders, welding operators, and tack welders who will use these procedures.

## *Part B*
## *Procedure Qualification*

**9.5 Qualification of Welding Procedures.** To qualify a welding procedure by test weldments, the Manufacturer shall choose testing according to 9.6 through 9.14 or prototype testing according to 9.5.3.

**9.5.1** The following rules apply when it is necessary to establish a welding procedure by qualification as required by 9.2 or the contract specifications, and the procedure shall be recorded by the Manufacturer as a welding procedure specification.

**9.5.1.1** Qualification of a welding procedure using a steel that is listed in Table 1, but not in 9.5.1.2, and has a minimum specified yield point of less than 50 ksi [345 MPa] shall qualify the procedure for welding any other steel or combination of steels listed in the table that have a minimum specified yield point equal to or less than that of the base metal used in the test.

**9.5.1.2** Qualification of a welding procedure established with ASTM A 131, Grades AH, DH, or EH; A 515; A 537, Class 1; A 572, Grade 42 through 50; or API 5LX, Grade 42 shall be considered as procedure qualification for welding any other steel or combination of steels in this group, or other steels included in Table 1 that have a lower minimum specified yield point.

**9.5.1.3** Qualification of a welding procedure established with a base metal included in Section 4, Base Metals, and having a minimum specified yield strength greater than 50 ksi [345 MPa] shall qualify the procedure for welding only base metals of the same material specification and grade or type that have the same minimum specified yield strength as the base metal tested, the permitted reduction in yield strength for increased material thickness being excepted. For example, a procedure qualified with a 1 in. [25 mm] thick, 100 ksi [690 MPa] yield strength base metal also qualifies for a 3 in. [75 mm] thick, 90 ksi [620 MPa] yield strength base metal of the same material specification.

**9.5.1.4** Qualification of a welding procedure established with a combination of base metals included in Table 1 of different minimum specified yield strengths, one of which is greater than 50 ksi [345 MPa], shall qualify the procedure for welding that high yield strength base metal to any other of those base metals that have a minimum specified yield strength equal to or less than that of the lower strength base metal used in the test.

**9.5.1.5** The variables listed in 9.5.2 are essential variables of a joint welding procedure. In preparing the procedure qualification record and the welding procedure specification, the Manufacturer or contractor shall report the specific values for the essential variables in 9.5.2. The suggested form for showing the information required is shown in Annex A.

**9.5.2 Limitations of Variables.** The changes set forth in 9.5.2.1 through 9.5.2.5 shall be considered essential changes in a welding procedure. Any changes exceeding the limitations thereof shall require establishment of a



Copyright American Welding Society
Provided by IHS under license with AWS
No reproduction or networking permitted without license from IHS
Not for Resale

new procedure incorporating those changes by qualification. When a combination of welding processes is used, the variables applicable to each process shall apply.

**9.5.2.1 Shielded Metal Arc Welding (SMAW).** A change in any of the following variables requires requalification of the WPS:

(1) A change increasing filler metal strength levels (for example, a change from E70XX(-X) to E80XX-X, but not vice versa).

(2) A change from a low-hydrogen electrode to a non-low-hydrogen electrode, but not vice versa.

(3) An increase in the diameter of the electrode used over that called for in the welding procedure specification.

(4) A change of more than 15% above or below the specified mean arc voltage or amperage for each size electrode used.[12]

(5) For a specified welding groove, a change of more than ±25% in the specified number of passes. If the area of the groove is changed, it is also permissible to change the number of passes in proportion to the change in area.

(6) A change in position in which welding is done, as defined in 9.8.

(7) For a change in groove type:

(a) A change in the type of groove (a change from a V-groove to U-groove for example), except qualification of a complete joint penetration groove weld qualifies for any groove detail which complies with the requirements of 6.10.1.

(b) A change in the type of groove to a square-groove or vice versa.

(8) A change in the shape of any one type of groove exceeding the tolerances given in Section 6, Weld Joint Design, involving the following:

(a) A decrease in the included angle of the groove.

(b) A decrease in the root opening of the groove.

(c) An increase in the root face of the groove.

(d) The omission, but not inclusion, of backing material.

(9) A decrease of more than 25°F [15°C] in the minimum specified preheat or interpass temperature.

(10) In vertical welding, a change in the progression specified for any pass from upward to downward, or vice versa.

(11) The omission, but not the inclusion, of backgouging.

(12) The addition or deletion of postweld heat treatment.

12. When welding quenched and tempered steel, any change within the limitation of variables shall not increase the heat input beyond the steel producer's recommendations.

**9.5.2.2 Submerged Arc Welding (SAW)**

(1) A change in the electrode-flux combination not covered by AWS A5.17 or A5.23.

(2) A change increasing the filler metal strength level (for example, from 80 ksi [550 MPa] to 90 ksi [620 MPa], but not vice versa).

(3) A change in electrode diameter when using an active or alloy flux.[13]

(4) A change in the number of electrodes used.

(5) A change in the type of current (ac or dc) or polarity when welding quenched and tempered steel, or when using an active or alloy flux.[13]

(6) A change of more than 10% above or below the specified mean amperage or wire feed speed for each electrode diameter used.[12]

(7) A change of more than 7% above or below the specified mean arc voltage for each diameter electrode used.[12]

(8) A change of more than 15% above or below the specified mean travel speed. [12]

(9) A change of more than 10%, or 1/8 in. [3 mm], whichever is greater, in the longitudinal spacing of multiple arcs.

(10) A change of more than 10%, or 1/16 in. [2 mm], whichever is greater, in the lateral spacing of multiple arcs.

(11) A change of more than ±10° in the angular position of any parallel electrode.

(12) A change in the angle of electrodes in machine or automatic welding of more than:

(a) ±3° in the direction of travel.

(b) ±5° normal to the direction of travel.

(13) For a specified groove, a change of more than ±25% in the specified number of passes. If the area of the groove is changed, it is permissible to change the number of passes in proportion to change in the area.

(14) A change in position in which welding is done as defined in 9.8.

(15) For a change in groove type:

(a) A change in the type of groove (a change from a V-groove to U-groove for example), except qualification of a complete joint penetration groove weld qualifies for any groove detail which complies with the requirements of 6.10.1.

(b) A change in the type of groove to a square-groove or vice versa.

(16) A change exceeding the tolerance of Section 6, Weld Joint Design, in the shape of any one type of groove involving.

13. Active and alloy fluxes are voltage dependent. AWS A5.17/A5.17M-97, Annex A6 contains more complete descriptions of these fluxes and their applications.



Copyright American Welding Society
Provided by IHS under license with AWS
No reproduction or networking permitted without license from IHS
Not for Resale

(a) A decrease in the included angle of the groove.

(b) A decrease in the root opening of the groove.

(c) An increase in the root face of the groove.

(d) The omission, but not inclusion, of backing material.

(17) A decrease of more than 25°F [15°C] in the minimum specified preheat or interpass temperature.

(18) An increase in the diameter of the electrode used over that called for in the welding procedure specification.

(19) The addition or deletion of supplemental powdered, granular, or cut wire filler metal.

(20) An increase in the amount of supplemental powdered, granular, or cut wire filler metal.

(21) If the alloy content of the weld metal is largely dependent on the composition of supplemental powdered filler metal, any change in the joint welding procedure that would result in the content of important alloying elements in the weld metal not meeting the chemical requirements given in the welding procedure specification.

(22) The omission, but not the inclusion, of backgouging.

(23) The addition or deletion of postweld heat treatment.

**9.5.2.3 Gas Metal Arc Welding (GMAW).** A change in any of the following variables requires requalification of the WPS:

(1) A change in the electrode and method of shielding not covered by AWS A5.18 or AWS A5.28.

(2) A change in filler metal to one of higher strength level, but not vice versa (for example, ER70S-X to ER80S-X).

(3) A change in electrode diameter.

(4) A change in the number of electrodes used.

(5) A change from a single shielding gas to any other single gas or to a mixture of gases, or a change in specified composition of a gas mixture not covered by AWS A5.18 or AWS A5.28.

(6) A change of more than 10% above or below the specified mean amperage or wire feed speed for each diameter electrode used.[12]

(7) A change of more than 7% above or below the specified mean arc voltage for each diameter electrode used.[12]

(8) A change of more than 10% above or below the specified mean travel speed.[12]

(9) An increase of 25% or more or a decrease of 10% or more in the flow rate of the shielding gas.

(10) For a specified groove, a change of more than ±25% in the specified number of passes. If the area of the groove is changed, it is permissible to change the number of passes in proportion to the change in area.

(11) A change in the position in which welding is done as defined in 9.8.

(12) For a change in groove type:

(a) A change in the type of groove (a change from a V-groove to U-groove for example), except qualification of a complete joint penetration groove weld qualifies for any groove detail which complies with the requirements of 6.10.1.

(b) A change in the type of groove to a square-groove or vice versa.

(13) A change exceeding the tolerance of Section 6, Weld Joint Design in the shape of any type of groove involving:

(a) A decrease in the included angle.

(b) A decrease in the root opening.

(c) An increase in the root face.

(d) The omission, but not inclusion, of backing material.

(14) A decrease of more than 25°F [15°C] in the minimum specified preheat or interpass temperature.

(15) In vertical welding, a change in the progression specified for any pass from upward to downward, or vice versa.

(16) A change in type of welding current (ac or dc), polarity, or mode of metal transfer across the arc.

(17) The omission, but not the inclusion, of backgouging.

(18) The addition or deletion of postweld heat treatment.

(19) When required, an increase of more than 10% in the heat input (combination of travel speed, current and voltage).

**9.5.2.4 Flux Cored Arc Welding (FCAW).** A change in any of the following variables requires requalification of the WPS:

(1) A change in the electrode and method of shielding not covered by AWS A5.20 or AWS A5.29.

(2) A change increasing the filler metal strength level (for example, from E70T-X to E80TX-X, but not vice versa).

(3) An increase in the diameter of electrode used over that called for in the welding procedure specification.

(4) A change in the number of electrodes used.

(5) A change from a single shielding gas to any other single gas or to a mixture of gases, or a change in the specified composition of a gas mixture not covered by AWS A5.20 or AWS A5.29.

(6) A change of more than 10% above or below the specified mean amperage or wire feed speed for each size of electrode used.[12]

(7) A change of more than 7% above or below the specified mean arc voltage for each size of electrode used.[12]

(8) A change of more than 10% above or below the specified mean travel speed.[12]

(9) An increase of 25% or more or a decrease of 10% or more, in the rate of flow of shielding gas.



Copyright American Welding Society
Provided by IHS under license with AWS
No reproduction or networking permitted without license from IHS
Not for Resale

(10) For a specified groove, a change of more than ±25% in the specified number of passes. If the area of the groove is changed, it is permissible to change the number of passes in proportion to the change in area.

(11) A change in the position in which welding is done, as defined in 9.8.

(12) For a change in groove type:

(a) A change in the type of groove (a change from a V-groove to U-groove for example), except qualification of a complete joint penetration groove weld qualifies for any groove detail which complies with the requirements of 6.10.1.

(b) A change in the type of groove to a square-groove or vice versa.

(13) A change exceeding the tolerance of Section 6, Weld Joint Design, in the shape of any type of groove involving:

(a) A decrease in the included angle.

(b) A decrease in the root opening.

(c) An increase in the root face.

(d) The omission, but not inclusion, of backing material.

(14) A decrease of more than 25°F [15°C] in the minimum specified preheat or interpass temperature.

(15) In vertical welding, a change in the progression specified for any pass from upward to downward, or vice versa.

(16) A change in type of welding current (ac or dc), polarity, or mode of metal transfer across the arc.

(17) The omission, but not the inclusion, of backgouging.

(18) The addition or deletion of postweld heat treatment.

(19) When required, an increase of more than 10% in the heat input (combination of travel speed, current and voltage).

**9.5.2.5 Electroslag Welding (ESW) and Electrogas Welding (EGW).** A change in any of the following variables requires requalification of the WPS:

(1) A change in filler metal or consumable guide tube metal composition.

(2) A change in the metal core cross-sectional area of the consumable guide tube exceeding 30%.

(3) A change in flux system (cored, magnetic electrode, external flux, etc.).

(4) A change in flux composition, including consumable guide tube covering.

(5) A change in shielding gas composition by a change in flow of any one constituent of a mixture by more than 5% of the total gas flow.

(6) A change either in welding current exceeding 20% or a change in wire feed speed exceeding 40%.

(7) A change in groove design, other than a square-groove, that increases the groove cross-sectional area.

(8) A change in joint thickness (T) outside the limits of 0.5T to 1.1T where T is the thickness used for the procedure qualification.

(9) A change in number of electrodes.

(10) A change from single-to multiple-pass, or vice versa.

(11) A change to a combination with any other welding process or method.

(12) A change in postweld heat treatment.

(13) A change in design of molding shoes, either fixed or movable, from nonfusing solid to water-cooled, or vice versa.

(14) A change exceeding 1/32 in. [1 mm] in filler metal diameter.

(15) A change exceeding 10 in./min [4 mm/s] in filler metal oscillation traverse speed.

(16) A change in filler metal oscillation traverse dwell time exceeding 2 seconds, except as necessary to compensate for variation in the joint opening.

(17) A change in filler metal oscillation traverse length that affects, by more than 1/8 in. [3 mm], the proximity of filler metal to the molding shoes.

(18) A change in flux burden exceeding 30%.

(19) A change in shielding gas flow rate exceeding 25%.

(20) A change in design of molding shoes, either fixed or movable, as follows:

(a) Metallic to nonmetallic, or vice versa.

(b) Nonfusing to fusing, or vice versa.

(c) A reduction in any cross-sectional dimension or area of solid nonfusing shoe exceeding 25%.

(21) A change in welding position from the qualified verticality by more than 10°.

(22) A change of welding current from ac to dc, or vice versa, or a change in electrode polarity for direct current.

(23) A change in welding power volt-ampere characteristics from constant voltage to constant current, or vice versa.

(24) A change in welding voltage exceeding 10%.

(25) A change exceeding 1/4 in. [6 mm] in the root opening of a square-groove weld.

(26) A change in groove design that reduces the cross-sectional area.

(27) A change in speed of vertical travel, if not an automatic function of arc length or deposition rate, exceeding 20% except as necessary to compensate for variation in joint opening.

### 9.5.3 Prototype Testing

**9.5.3.1** With prior agreement between the Owner and the Manufacturer, welding procedures may be qualified by utilizing prototype structures or components that comply with the minimum performance criteria as follows:



Copyright American Welding Society
Provided by IHS under license with AWS
No reproduction or networking permitted without license from IHS
Not for Resale

(1) Simulated service tests of a welded assembly or a mockup of the welded joint. The simulated service test shall include impact loading, loading in bending, static loading, or fatigue testing to duplicate the type of loading the joint will be subjected to in service.

(2) A field test of the welded assembly on a machine loaded and performing the work for which it was designed.

**9.5.3.2** For simulated service or field tests, the following shall be documented and recorded:

(1) The weldment drawing to which the test part or assembly was made.

(2) The material specifications of all items included in the assembly.

(3) The detailed welding procedure employed including welding process, filler metal, joint preparation, preheat, welding conditions, and sequence of weld passes (see Annex A).

(4) The type of loading applied, direction, and magnitude of forces (by calculation or instrumentation), frequency and total number of applications, or specific duration of the test.

(5) The results of visual examination and nondestructive testing of all welded joints subjected to loading in the test.

(6) The results of destructive tests of weldments.

**9.5.3.3** The welding procedure employed for the test assembly shall be considered qualified provided the following are met:

(1) Visual and any required nondestructive examinations, prior to test, meet the requirements of Section 10, Weld Quality and Inspection.

(2) Specified examinations conducted after test assure performance criteria are met.

**9.5.3.4** A test assembly welding procedure shall be requalified when a change in an essential variable exceeds the limits for the welding process (see 9.5.2.1 through 9.5.2.5).

**9.6 Types of Tests and Purposes.** The tests that are used to determine the mechanical properties and soundness of welded joints made to qualify a welding procedure are as follows:

**9.6.1 Groove Welds.** The tests for groove welds are as follows:

(1) Reduced-section tension test for tensile strength,

(2) Root-, face-, and side-bend tests for soundness,

(3) Radiographic test for soundness,

(4) Ultrasonic test for soundness,

(5) All-weld-metal tension test for mechanical properties,

(6) Impact test for toughness, and

(7) Macroetch test for soundness and weld size in partial joint penetration groove welds.

**9.6.2 Fillet Welds.** Fillet welds should be macroetch tested for soundness and fusion.

**9.7 Base Metal.** The base metal and the preparation for welding shall be that specified in the procedure specification being qualified. For all types of welded joints, the length of the welded joint and dimensions of the base metal shall provide sufficient material for the required test specimens.

**9.8 Position of Test Welds**

**9.8.1** All welds that will be encountered in actual construction shall be classified as flat, horizontal, vertical, or overhead. Welding position limitations for procedure qualification are shown in Table 13.

**9.8.2 Plate Groove Weld Tests.** When making tests to qualify welding procedures for groove welds in plate, test plates shall be welded in each of the positions to be qualified as follows:

(1) Position 1G (flat)—The test plates shall be placed in an approximately horizontal plane and the weld metal deposited on the upper side. See Figure 11(A).

(2) Position 2G (horizontal)—The test plates shall be placed in an approximately vertical plane with the groove approximately horizontal. See Figure 11(B).

(3) Position 3G (vertical)—The test plates shall be placed in an approximately vertical plane with the groove approximately vertical. See Figure 11(C).

(4) Position 4G (overhead)—The test plates shall be placed in an approximately horizontal plane, and the weld metal deposited on the under side. See Figure 11(D).

**9.8.3 Pipe Groove Weld Tests.** When making tests to qualify welding procedures for groove welds in pipe, test pipes shall be welded in each of the positions to be qualified as follows:

(1) Position 1G (pipe horizontal, rolled)—The test pipe shall be placed with its axis horizontal and the groove approximately vertical. The pipe shall be rotated during welding so the weld metal is deposited on the upper side. See Figure 12(A).

(2) Position 2G (pipe vertical)—The test pipe shall be placed with its axis vertical to the welding groove approximately horizontal. The pipe shall not be rotated during welding. See Figure 12(B).

(3) Position 5G (pipe horizontal, fixed)—The test pipe shall be placed with its axis horizontal and the groove approximately vertical. The pipe is not rotated during welding. See Figure 12(C).



Copyright American Welding Society
Provided by IHS under license with AWS
No reproduction or networking permitted without license from IHS
Not for Resale

**Table 13**
**Procedure Qualification—Type and Position Limitations (see 9.10.5)**

| Qualification Test | | Type of Weld and Position of Welding Qualified[1] | | | |
|---|---|---|---|---|---|
| | | Plate[2] | | Pipe[2] | |
| Weld Type | Plate or Pipe Positions[3] | Groove | Fillet | Groove | Fillet |
| Plate-groove | 1G | F | F | F | F |
| | 2G | H | F, H | F, H | F, H |
| | 3G | V | V | | |
| | 4G | OH | OH | | |
| Plate-fillet | 1F | | F | | F, |
| | 2F | | F, H | | F, H |
| | 3F | | V | | V |
| | 4F | | OH | | OH |
| Pipe-groove | 1G Rotated | F | F | F | F |
| | 2G | F, H | F, H | F, H | F, H |
| | 5G | F, V, OH | F, V, OH | F, V, OH | F, V, OH |
| | 6G[4] | F, H, V, OH | F, H, V, OH | F, H, V, OH | F, H, V, OH |

Notes:
(1) Positions of welding: F = flat, H = horizontal, V = vertical, OH = overhead.
(2) Qualifies for a welding axis with an essentially straight line and specifically includes plates, wrought shapes, fabricated sections, and rectangular fabricated sections and pipe or tubing over 24 in. [600 mm] minimum in diameter, except for complete joint penetration welds in tubular T-, Y-, and K-connections. This includes welding along a line parallel to the axis of round pipe.
(3) See Figures 11, 12, and 13.
(4) Qualifies for fillet and groove welds in all positions except for complete joint penetration groove welding of T-, Y-, and K-connections.

(4) Position 6G (pipe inclined, fixed)—The test pipe shall be inclined at 45° with the horizontal. The pipe is not rotated during welding. See Figure 12(D).

**9.8.4 Fillet Weld Tests.** When making tests to qualify welding procedures for fillet welds, test plates shall be welded in each of the positions to be qualified as follows:

(1) Position 1F (flat)—The test plates shall be so placed that each fillet weld is deposited with its axis and face approximately horizontal, and its throat approximately vertical. See Figure 13(A).

(2) Position 2F (horizontal)—The test plates shall be so placed that each fillet weld is deposited on the upper side of a horizontal surface and against a vertical surface. See Figure 13(B).

(3) Position 3F (vertical)—The test plates shall be placed in an approximately vertical plane, and each fillet weld deposited on vertical surfaces with the axis of the weld vertical. See Figure 13(C).

(4) Position 4F (overhead)—The test plates shall be so placed that each fillet weld is deposited on the underside of a horizontal surface and against a vertical surface. See Figure 13(D).

*Note: There are no provisions for separate tests to qualify welding procedures for pipe fillet welds. Pipe groove weld tests will qualify welding procedures for pipe fillet welds.*

### 9.9 Joint Welding Procedure

**9.9.1** The procedure for welding a joint shall comply in all respects with the welding procedure specification.

**9.9.2** Cleaning during the welding of test weld shall be done in the welding position being qualified.

### 9.10 Test Specimens

#### 9.10.1 Complete Joint Penetration Groove Welds

**9.10.1.1** The type and number of test specimens that shall be tested to qualify a welding procedure are shown in Table 14, together with the range of thickness that is qualified for use in construction. The range is based on the thickness of the test plate, pipe, or tubing used in making the qualification test.

**9.10.1.2** Test specimens to qualify groove welds in T-joints or corner joints shall be butt joints having the



Copyright American Welding Society
Provided by IHS under license with AWS
No reproduction or networking permitted without license from IHS
Not for Resale

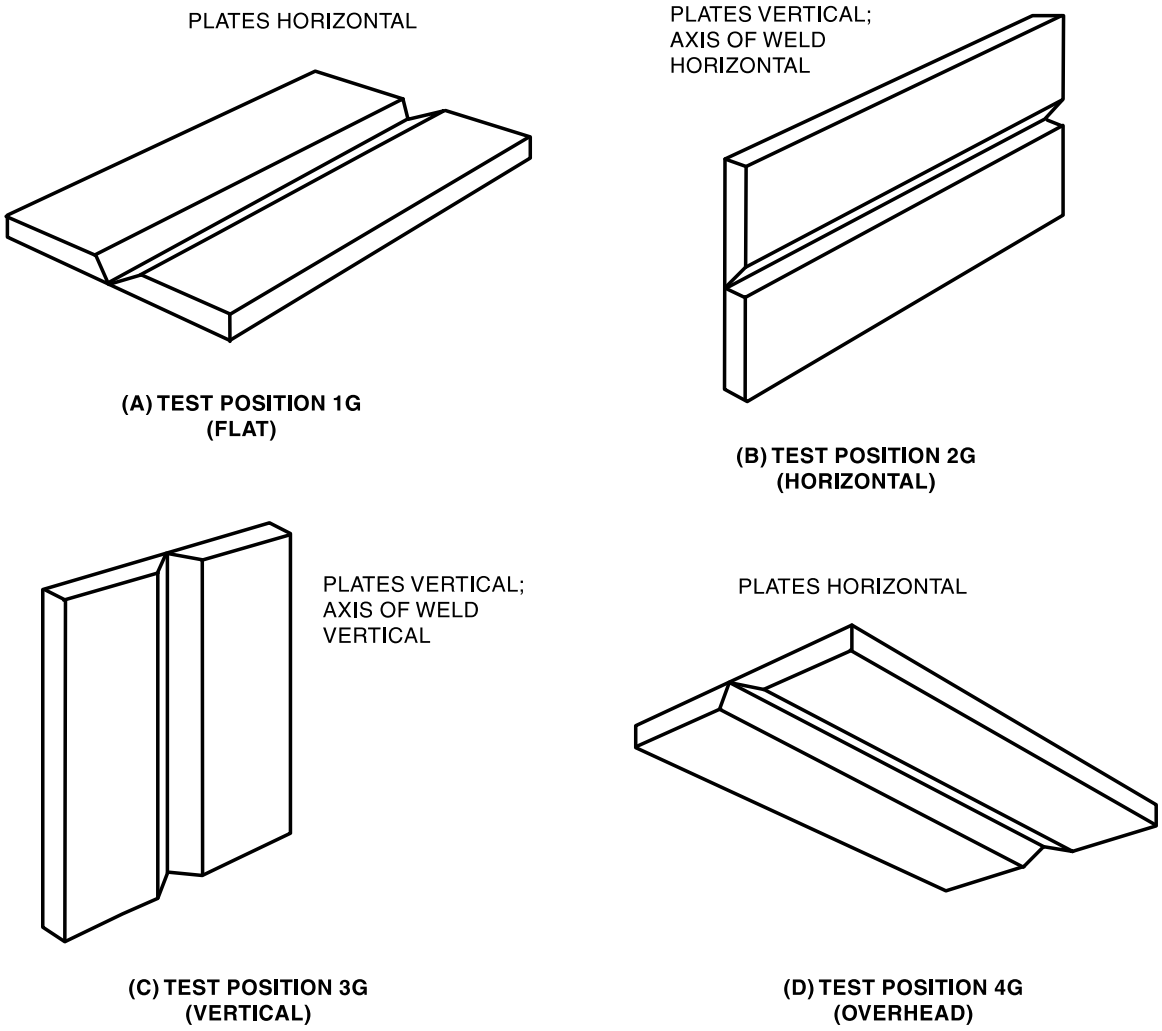


**Figure 11—Positions of Test Plates for Groove Welds**

same groove configurations as the T-joints or corner joints to be used in construction.

**9.10.1.3 Nondestructive Testing.** Procedure qualification test plates, pipe or tubing (Figures 14A through 14E) shall be radiographically or ultrasonically examined for soundness before preparing the required mechanical test specimens. Radiographic or ultrasonic testing shall apply only to that portion of the weld in test plates between the discard strips, except that a minimum of 6 in. [150 mm] of effective weld length shall be examined. The full circumference of a completed weld in pipe or tubing shall be examined. The welding procedure is unacceptable if the test results do not conform to the requirements of 9.12.

**9.10.1.4 Mechanical Testing.** Test specimens shall be prepared by cutting the welded test plate, pipe, or tubing as shown in Figures 14A through 14E, whichever is applicable. The specimens shall be prepared for testing in accordance with Figures 15A through 15D, as applicable.

**9.10.1.5** When material combinations differ markedly in mechanical bending properties, as between two base materials or between the weld metal and the base metal, longitudinal bend tests (face and root) may be used in lieu of the transverse face- and root-bend tests. The welded test assemblies conforming to 9.10.1.3 shall have test specimens prepared by cutting the test plate as shown in Figures 14D or 14E, whichever is applicable. The test specimens for the longitudinal bend test shall be prepared for testing as shown in Figure 15C.



Copyright American Welding Society
Provided by IHS under license with AWS
No reproduction or networking permitted without license from IHS
Not for Resale

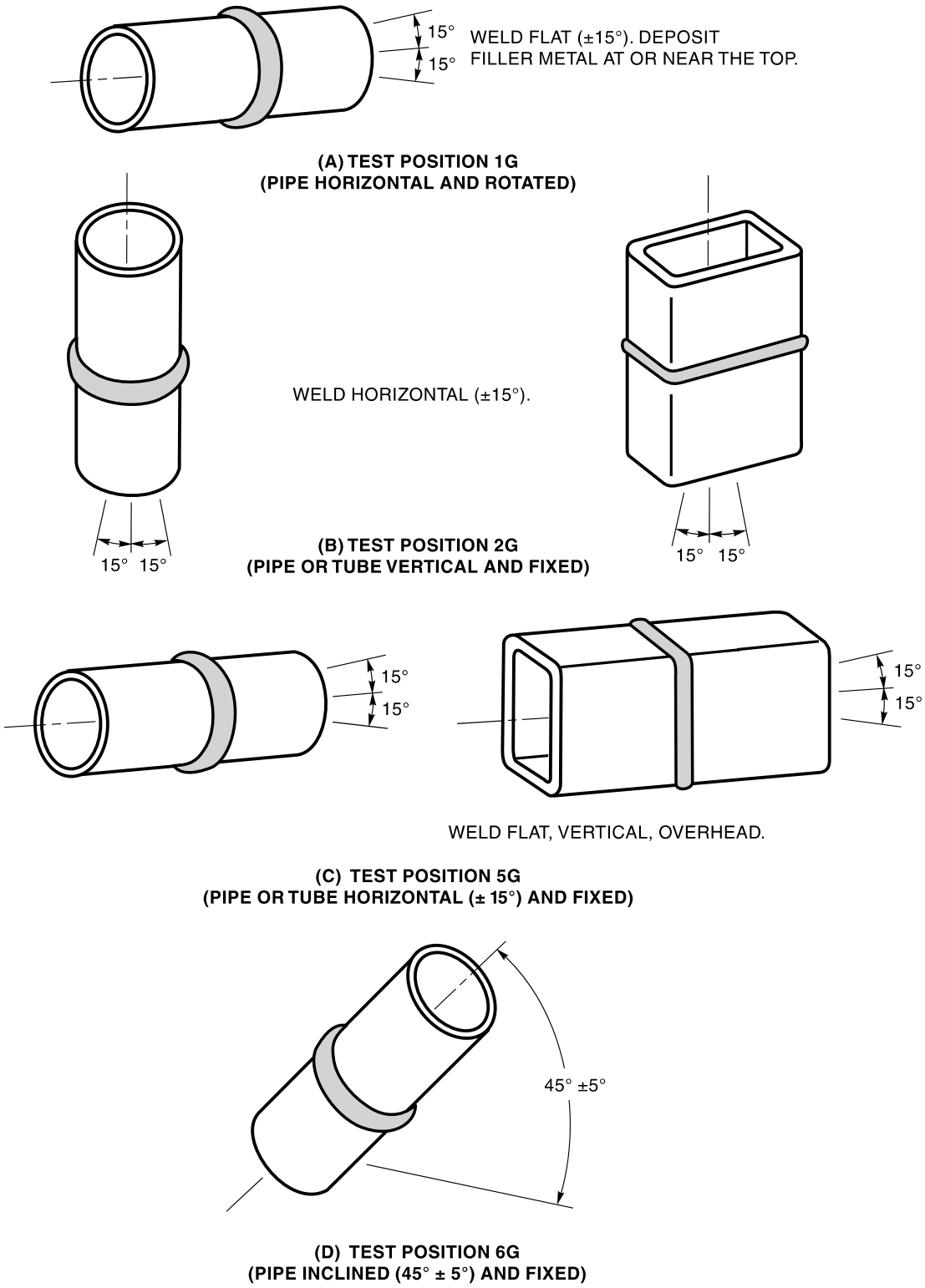


**Figure 12—Positions of Test Pipe or Tubing for Groove Welds**



Copyright American Welding Society
Provided by IHS under license with AWS
No reproduction or networking permitted without license from IHS
Not for Resale

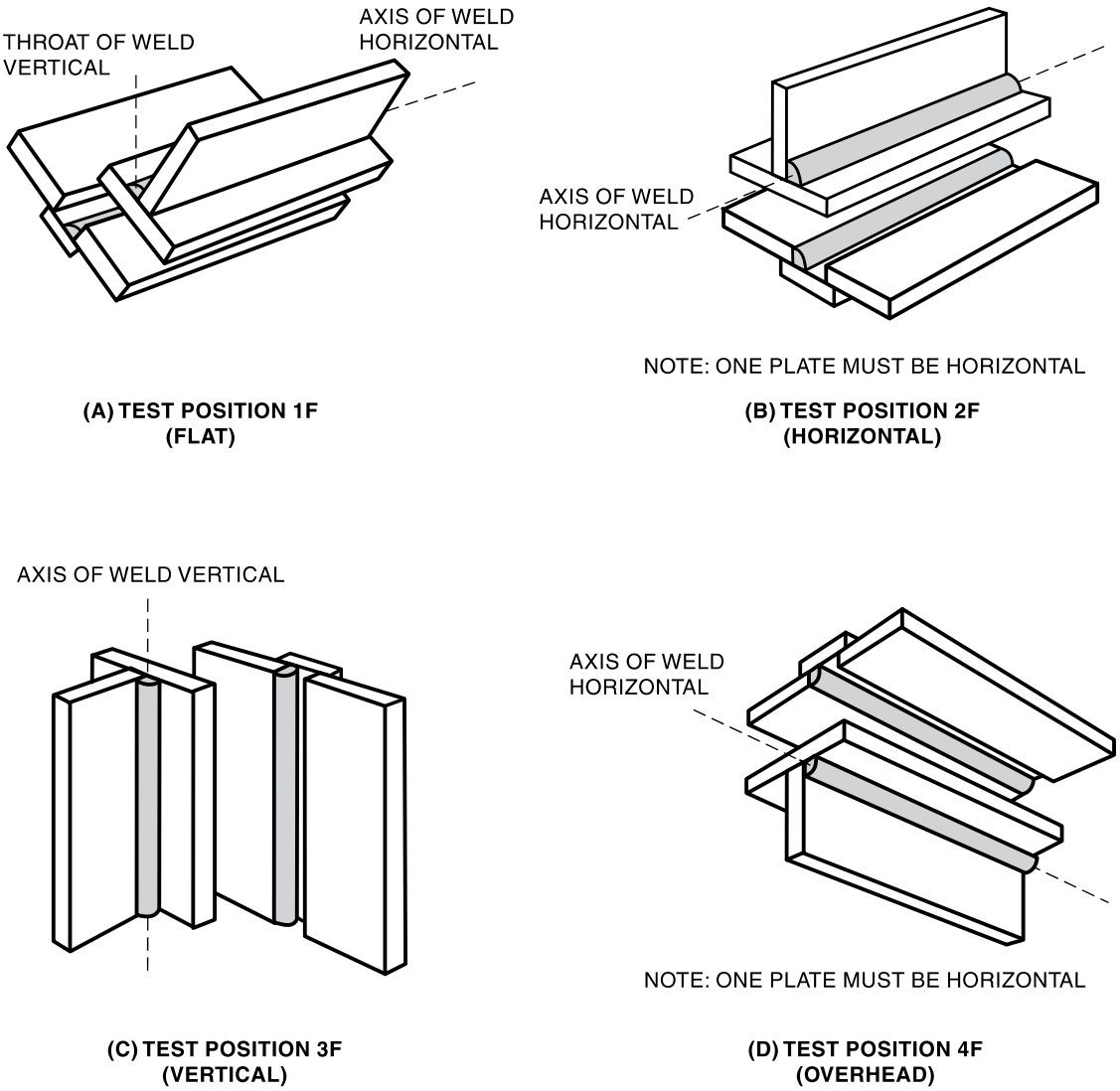


**Figure 13—Positions of Test Plates for Fillet Welds**

### 9.10.2 Partial Joint Penetration Groove Welds

**9.10.2.1** A sample weld shall be made using the type of groove design and joint welding procedure to be used in construction, except that the depth of groove need not exceed 1 in. [25 mm]. If the partial joint penetration groove weld is to be used for corner or T-joints, the butt joint shall have a temporary restrictive plate in the plane of the square face to simulate a T-joint configuration. The sample weld shall first be visually examined to 9.12.7 and, if applicable, further examined as follows:

**9.10.2.2** For joint welding procedures which conform in all respects to Sections 7 (Workmanship) and 8 (Processes and Filler Metals), three macroetch cross section specimens shall be prepared to demonstrate that the designated effective throat (obtained from the requirements of the procedure specification) is met.

**9.10.2.3** When a joint welding procedure has been qualified for a complete joint penetration groove weld and is applied to the welding conditions of a partial joint penetration groove weld, three macroetch cross section test specimens are required.

**9.10.2.4** If a joint welding procedure is not covered by either 9.10.2.2 or 9.10.2.3, or if the welding variables do not meet a prequalified status or have not been used



Copyright American Welding Society
Provided by IHS under license with AWS
No reproduction or networking permitted without license from IHS
Not for Resale

## Table 14
## Number and Type of Test Specimens and Range of Thickness Qualified—Procedure Qualification; Complete Joint Penetration Groove Welds

**1. Tests on Plate**

| Plate Thickness (T) Tested, in. [mm] | Number of Sample Welds per Position | NDT(1) | Test Specimens Required | | | | Plate Thickness (T) Qualified, in. [mm] Maximum(2) |
|---|---|---|---|---|---|---|---|
| | | | Reduced-Section Tension (see Fig. 17A) | Root Bend (see Fig. 17C) | Face Bend (see Fig. 17C) | Side Bend (see Fig. 17D) | |
| 1/8 [2] ≤ T < 3/8 [10] | 1 | Yes | 2 | 2 | 2 | — | 1/8 [3] to 2T |
| 3/8 [10] | 1 | Yes | 2 | 2 | 2 | — | 3/4 [20] |
| 3/8 [10] < T < 1 [25] | 1 | Yes | 2 | — | — | 4 | 2T |
| ≥ 1 [25] | 1 | Yes | 2 | — | — | 4 | Unlimited |

Notes:
(1) A minimum of 6 in. [150 mm] of effective weld length shall be examined by radiographic or ultrasonic testing prior to mechanical testing.
(2) For square groove welds, qualification shall be limited to thickness tested.

General Note: All welded test plates shall be visually inspected (see 9.12.7).

**2. Tests on Pipe or Tubing**

| Pipe Size of Sample Weld | | Number of Sample Welds per Position | NDT(3) | Test Specimens Required | | | | Pipe or Tube Size Qualified | | |
|---|---|---|---|---|---|---|---|---|---|---|
| | | | | Number of Specimens | | | | | Wall Thickness, in. [mm] | |
| Diameter in. [mm] | Wall Thickness | | | Reduced-Section Tension (see Fig. 17A) | Root Bend (see Fig. 17C) | Face Bend (see Fig. 17C) | Side Bend (see Fig. 17D) | Diameter, in. [mm] | Min | Max |
| 2 [50] or 3 [75] | Sch. 80 or Sch. 40 | 2 | Yes | 2 | 2 | 2 | — | 3/4 [20] through 4 [100] | 0.125 [3] | 0.674 [17] |
| 6 [150] or 8 [200] | Sch. 120 or Sch. 80 | 1 | Yes | 2 | — | — | 4 | 4 [100] and over | 0.187 [5] | Any |
| Job Size Pipe or Tubing | | | | | | | | | | |
| Diameter in. [mm] | Wall Thickness, T, in. [mm] | | | | | | | | | |
| < 24 [600] | 1/8 ≤ T ≤ 3/8 [3 ≤ T ≤ 10] | 1 | Yes | 2 | 2 | 2 | — | Test diameter and over | 1/8 [3] | 2T |
| | 3/8 < T < 3/4 [10 < T < 20] | 1 | Yes | 2 | — | — | 4 | Test diameter and over | T/2 | 2T |
| | T ≥ 3/4 [20] | 1 | Yes | 2 | — | — | 4 | Test diameter and over | 0.375 [10] | Unlimited |
| ≥ 24 [600] | 1/8 ≤ T ≤ 3/8 [3 ≤ T ≤ 10] | 1 | Yes | 2 | 2 | 2 | — | Test diameter and over | 1/8 [3] | 2T |
| | 3/8 < T < 3/4 [10 < T < 20] | 1 | Yes | 2 | — | — | 4 | 24 [600] and over | T/2 | 2T |
| | T ≥ 3/4 [20] | 1 | Yes | 2 | — | — | 4 | 24 [600] and over | 0.375 [10] | Unlimited |

Notes:
(3) For pipe or tubing, the full circumference of the completed weld shall be examined by radiographic or ultrasonic testing prior to mechanical testing.

General Note: All welded test pipes or tubing shall be visually inspected (see 9.12.6).

(continued)



Copyright American Welding Society
Provided by IHS under license with AWS
No reproduction or networking permitted without license from IHS
Not for Resale

**Table 14 (Continued)**
**Number and Type of Test Specimens and Range of Thickness Qualified—**
**Procedure Qualification; Complete Joint Penetration Groove Welds**

**3. Tests on Electroslag and Electrogas Welding**

| Plate Thickness (T) Tested, in. [mm] | Number of Sample Welds | NDT[4] | Test Specimens Required | | | | Plate Thickness (T) Qualified |
|---|---|---|---|---|---|---|---|
| | | | Reduced-Section Tension (see Fig. 17A) | All-Weld Metal Tension (see Fig. 17B) | Side Bend (see Fig. 17D) | Impact Tests[5] (see 8.5.2) | |
| T[6] | 1 | Yes | 2 | 1 | 4 | 5 | 0.5T–1.1T |

Notes:
(4) 6 in. [150 mm] minimum length of weld shall be examined by radiographic or ultrasonic testing prior to mechanical testing (see 9.10.1.3).
(5) If required.
(6) T is the test plate thickness.

General Note: All welded test plates shall be visually inspected (see 9.12.7).

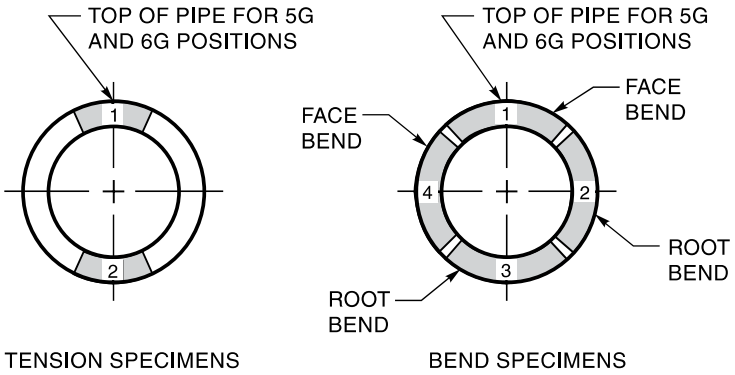


**Figure 14A—Location of Test Specimens on Welded Test Pipe 2 in. [50 mm] or 3 in. [75 mm] in Diameter**

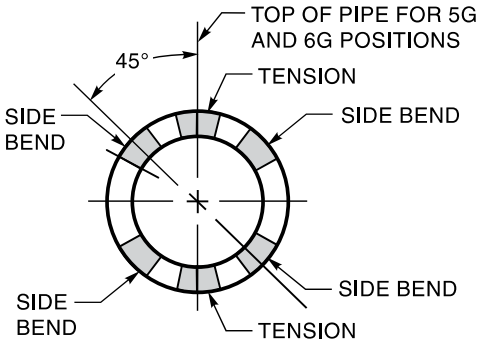


**Figure 14B—Location of Test Specimens on Welded Test Pipe 6 in. [150 mm] or 8 in. [200 mm] in Diameter**



Copyright American Welding Society
Provided by IHS under license with AWS
No reproduction or networking permitted without license from IHS
Not for Resale

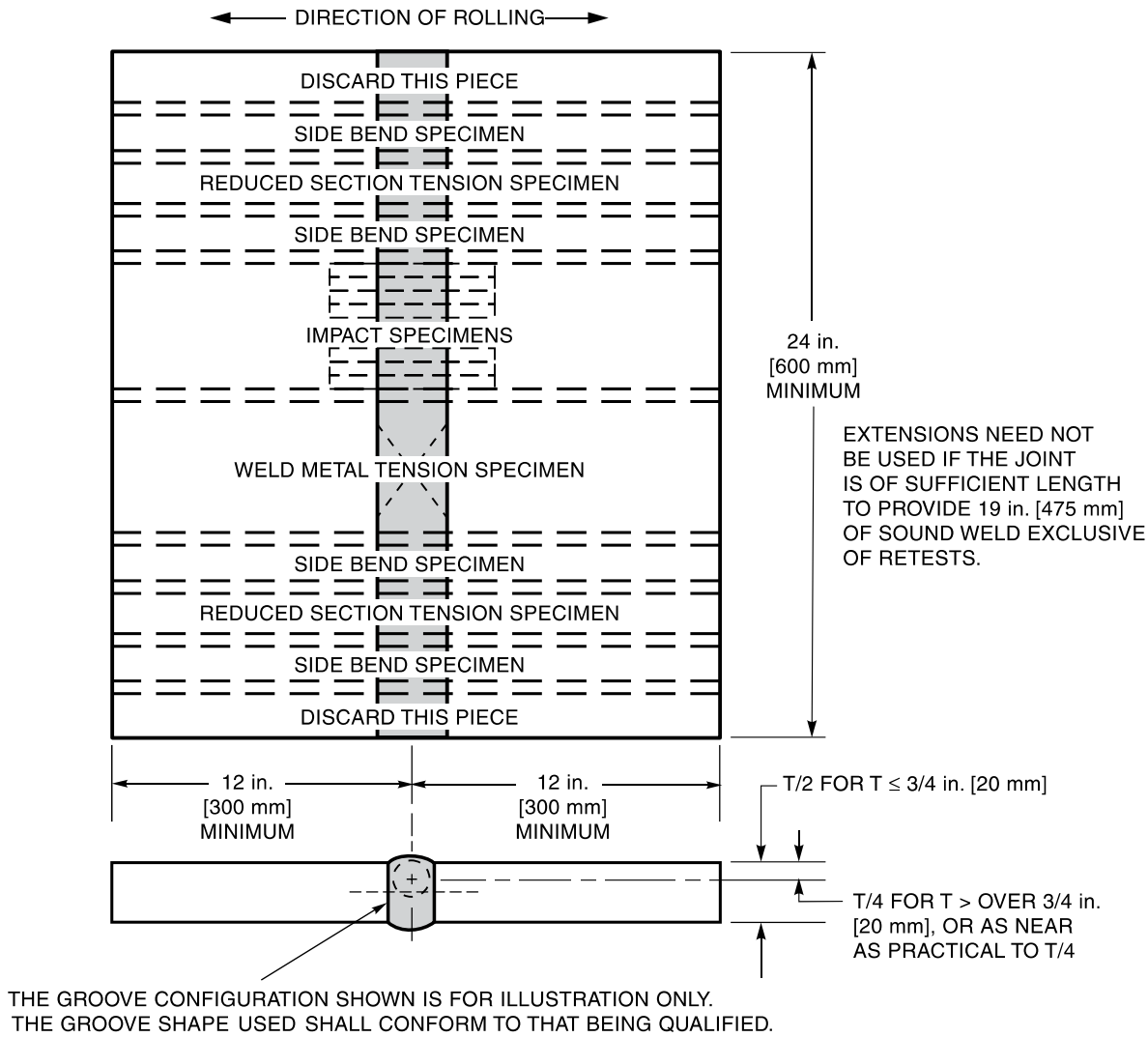


**Figure 14C—Location of Test Specimens on Welded Test Plate—Electroslag and Electrogas Welding—Procedure Qualification**

and tested for a complete joint penetration groove weld, then a test sample joint shall be prepared. The first test on the joint is a macroetch test to determine the effective throat of the weld. Next, material is machined from the bottom side of the joint until its thickness is equal to the effective throat of the weld. Tension and bend test specimens shall then be prepared from the test joint, and tests performed as required for complete joint penetration groove welds (see 9.10.1).

**9.10.3 Fillet Welds.** A T-shaped specimen with a double fillet weld, as shown in Figure 16, shall be made for each welding procedure and welding position to be used in construction. One of the test welds shall be the maximum size single-pass fillet weld, and the other test weld shall be the minimum size multiple-pass fillet weld to be used in construction. The weldments shall be cut perpendicular to the direction of welding at three locations, as shown in Figure 16. One face of each of the three cuts shall be prepared for macroetch examination in accordance with 9.11.2.

**9.10.4** Test specimens may be aged between 200°F and 225°F [95°C and 105°C] for 46 to 50 hours when required or permitted by the filler metal specification applicable to the weld metal being tested.

**9.10.5** Qualification on pipe shall also qualify for plate, but not vice versa. One exception is that qualifica-



Copyright American Welding Society
Provided by IHS under license with AWS
No reproduction or networking permitted without license from IHS
Not for Resale

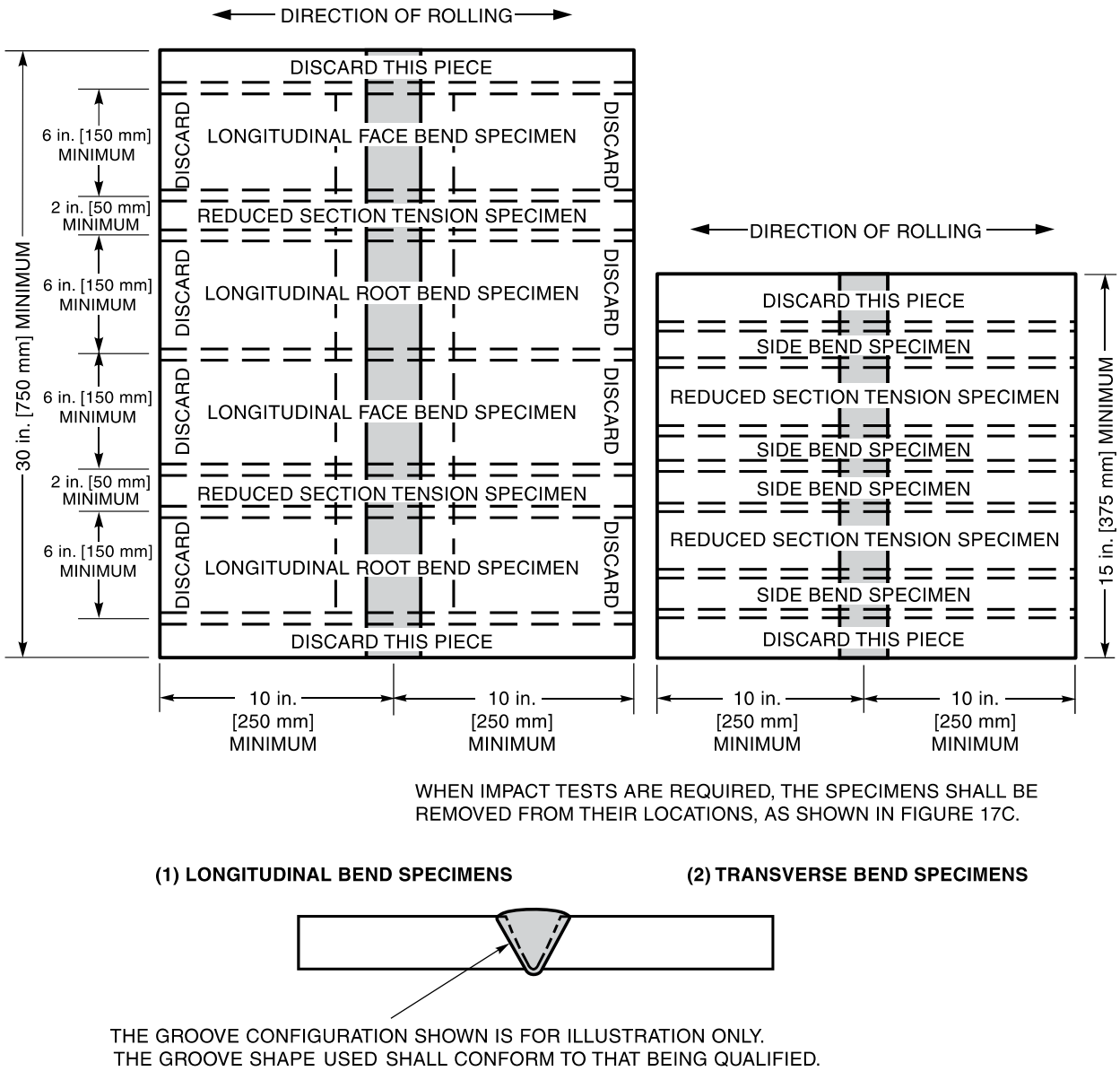


**Figure 14D—Location of Test Specimens on Welded Test Plate Over 3/8 in. [10 mm] Thick—Procedure Qualification**

tion on plate in the 1G (flat) or 2G (horizontal) positions shall qualify for welding groove welds and fillet welds in pipe or tubing that is over 24 in. [600 mm] in diameter. Welding position limitations for procedure qualification are shown in Table 13.

### 9.11 Method of Testing Specimens

**9.11.1 Reduced-Section Tension Specimens.** Before testing, the least width and corresponding thickness of the reduced section shall be measured. The initial cross-sectional area shall be obtained by multiplying this width by the thickness. The specimen shall be ruptured under tensile load, and the maximum load shall be determined. The tensile strength shall be obtained by dividing the maximum load by the initial cross-sectional area.

**9.11.2 Macroetch Test.** The weld test specimens shall be prepared with a finish suitable for macroetch examination. A suitable macroetch solution (such as hot ammonium persulfate) shall be used for etching to



Copyright American Welding Society
Provided by IHS under license with AWS
No reproduction or networking permitted without license from IHS
Not for Resale

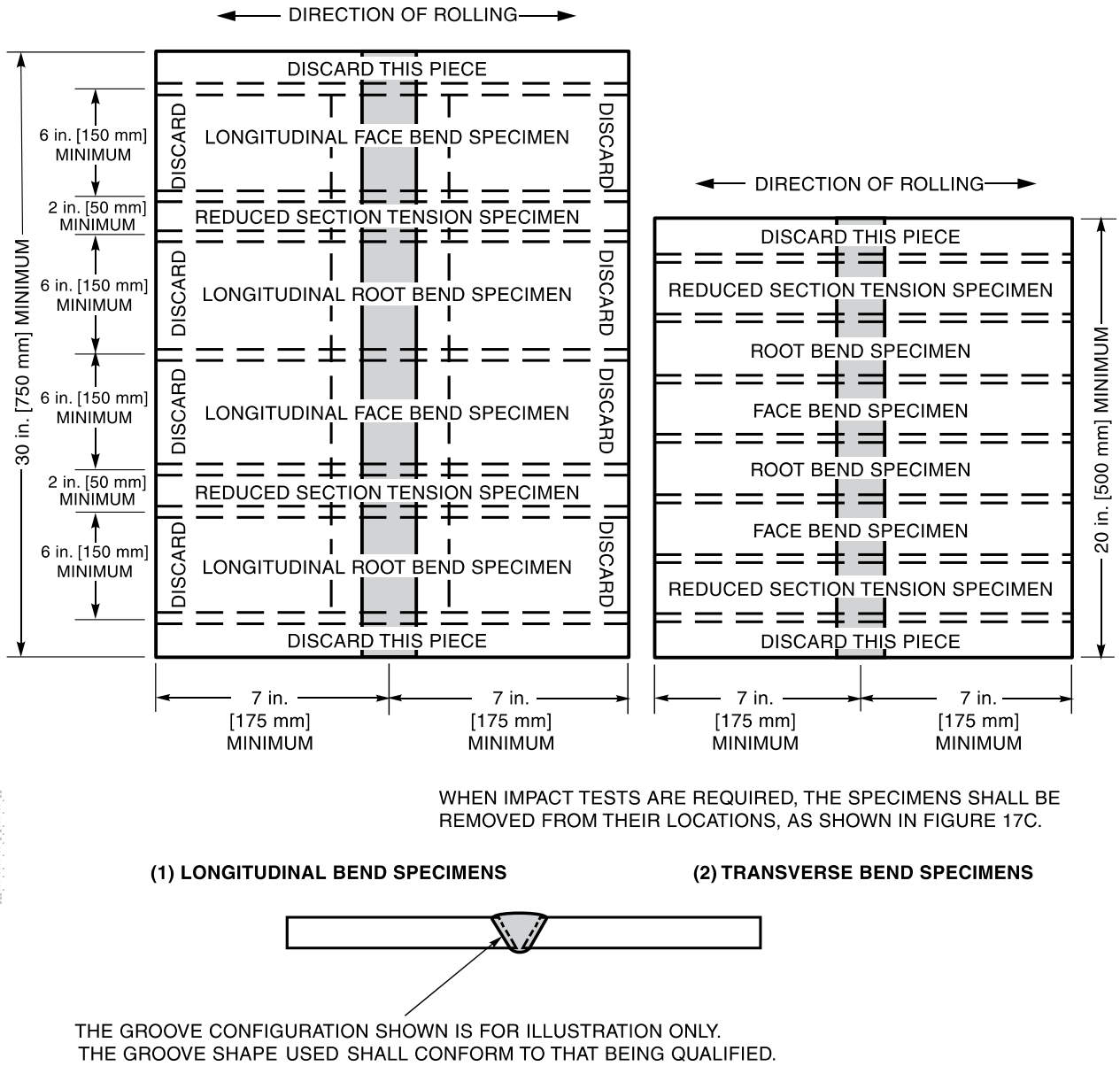


**Figure 14E—Location of Test Specimens on Welded Test Plate 3/8 in. [10 mm] Thick and Under—Procedure Qualification**

accentuate the gross structure of the weld and any exposed internal discontinuities.

### 9.11.3 Root-, Face-, and Side-Bend Specimens

**9.11.3.1** Each specimen shall be bent in a guided bend test jig. Any convenient means may be used to complete the bend test (see 9.27.1).

**9.11.3.2** Face-bend specimens shall be oriented so that the face of the weld will be in tension. Root-bend and fillet-weld-soundness specimens shall be oriented so that the root of the weld will be in tension. Side-bend specimens shall be oriented so that the side showing the larger discontinuity, if any, will be in tension.

**9.11.3.3** The specimen shall be formed into a U-shape. The weld and heat-affected zones shall be centered and completely within the bent portion of the specimen after bending.



Copyright American Welding Society
Provided by IHS under license with AWS
No reproduction or networking permitted without license from IHS
Not for Resale

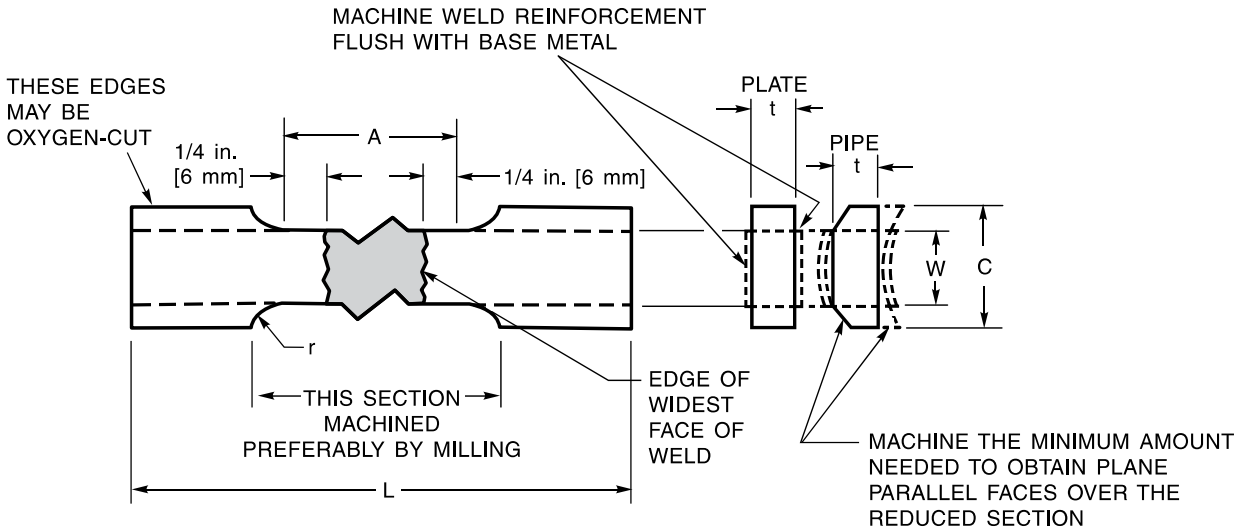


| Dimensions, in. [mm] | | | | | |
|---|---|---|---|---|---|
| | Test Plate[1] | | | Test Pipe | |
| | Tp ≤ 1 [25] | 1 < Tp < 1-1/2 [25 < Tp < 40] | Tp ≥ 1-1/2 [40] | 2 [50] & 3 [75] Diameter | 6 [150] & 8 [200] Diameter or Larger |
| A—Length of Reduced Section | Widest Face of Weld + 1/2 [13], 2-1/4 [55] minimum | | | Widest Face of Weld + 1/2 [3], 2-1/4 [55] minimum | |
| L—Overall Length, minimum[2] | As required by Testing Equipment | | | As required by Testing Equipment | |
| W—Width of Reduced Section[3], [4] | 1-1/2 ± 0.01 [40 ± 0.3] | 1 ± 0.01 [25 ± 0.3] | 1 ± 0.01 [25 ± 0.3] | 1/2 ± 0.01 [13 ± 0.3] | 3/4 ± 0.01 [20 ± 0.3] |
| C—Width of Grip Section[4], [5] | 2 [50 | 1-1/2 [40] | 1-1/2 [40] | 1 [25] approx. | 1-1/4 [30] approx. |
| t—Specimen Thickness[6], [7] | Tp | Tp | Tp/n (Note 7) | Maximum possible with plane parallel faces within Length A | |
| r—Radius of Fillet, minimum | 1/2 [13] | 1/2 [13] | 1/2 [13] | 1 [25] | 1 [25] |

Notes:
(1) Tp = thickness of the plate.
(2) It is desirable, if possible, to make the length of the grip section large enough to allow the specimen to extend into the grips a distance equal to two-thirds or more of the length of the grips.
(3) The ends of the reduced section shall not differ in width by more than 0.004 in. [0.10 mm]. Also, there may be a gradual decrease in width from the ends to the center, but the width of either end shall not be more than 0.015 in. [0.40 mm] larger than the width at the center.
(4) Narrower widths (W and C) may be used when necessary. In such cases, the width of the reduced section should be as large as the width of the material being tested permits. If the width of the material is less than W, the sides may be parallel throughout the length of the specimen.
(5) For standard plate-type specimens, the ends of the specimen shall be symmetrical with the centerline of the reduced section within 0.25 in. [6 mm], except for referee testing, in which case the ends of the specimen shall be symmetrical with the centerline of the reduced section within 0.10 in. [2.5 mm].
(6) The dimension t is the thickness of the specimen as provided for in the applicable material specifications. The minimum nominal thickness of 1-1/2 in. [40 mm] wide specimens shall be 3/16 in. [5 mm], except as permitted by the product specification.
(7) For plates over 1-1/2 in. [40 mm] thick, specimens may be cut into the minimum number of approximately equal strips not exceeding 1-1/2 in. [40 mm] in thickness. Test each strip and average the results.

**Figure 15A—Reduced-Section Tension Specimens**



Copyright American Welding Society
Provided by IHS under license with AWS
No reproduction or networking permitted without license from IHS
Not for Resale

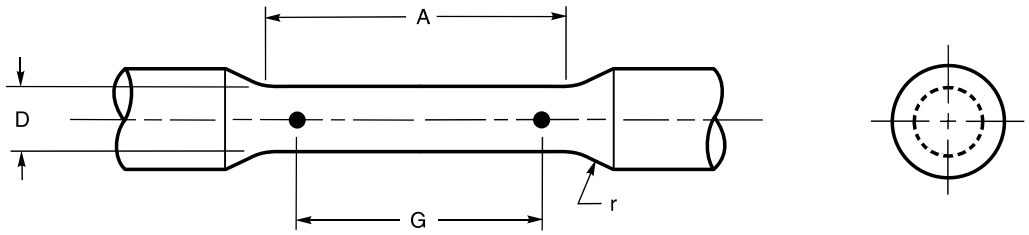


| | Dimensions, in. [mm] | | |
|---|---|---|---|
| | Standard Specimen | Small-Size Specimens Proportional to Standard | |
| Nominal Diameter | 0.500 [12.7] Round | 0.350 [8.9] Round | 0.250 [6.35] Round |
| G—Gage Length(1) | 2.000 ± 0.005 [51.4 ± 0.13] | 1.400 ± 0.005 [35.6 ± 0.13] | 1.000 ± 0.005 [25.4 ± 0.13] |
| D—Diameter(2) | 0.500 ± 0.010 [12.7 ± 0.25] | 0.350 ± 0.007 [8.9 ± 0.18] | 0.250 ± 0.005 [6.35 ± 0.13] |
| r—Radius of Fillet, minimum | 3/8 [10] | 1/4 [6] | 3/16 [5] |
| A—Length of Reduced Section(3) | 2-1/4 [55] | 1-3/4 [45] | 1-1/4 [30] |

Notes:
(1) The gage length and fillets shall be as shown, but the ends may be of any form to fit the holders of the testing machine in such a way that the load shall be axial. If the ends are to be held in wedge grips, it is desirable, if possible, to make the length of the grip section great enough to allow the specimen to extend into the grips a distance equal to two-thirds or more of the length of the grips.
(2) The reduced section may have a gradual taper from the ends toward the center, with the ends not more than 1% larger in diameter than the center (controlling dimension).
(3) If desired, the length of the reduced section may be increased to accommodate an extensometer of any convenient gage length. Reference marks for the measurement of elongation should be spaced at the indicated gage length.

## Figure 15B—All-Weld-Metal Tension Specimens

**9.11.3.4** When using a wraparound jig, the specimen shall be firmly clamped on one end so that it does not slide during the bending operation. The weld and heat-affected zones shall be completely in the bent portion of the specimen after testing. Test specimens are to be removed from the jig after the bending roller has been moved 180° from the starting point.

**9.11.4 All-Weld-Metal Tension Test.** The test specimen shall be tested in accordance with the latest edition of AWS B4.0 or B4.0M, *Standard Methods for Mechanical Testing of Welds*.

**9.11.5 Radiography.** The radiographic procedure and technique shall be in conformance to the requirements of Section 10, Weld Quality and Inspection.

**9.11.6 Ultrasonic Testing.** The ultrasonic procedure and technique shall be in conformance to the requirements of Section 10.

### 9.12 Test Results Required

**9.12.1 Reduced-Section Tension Test.** The tensile strength shall not be less than the minimum of the specified tensile range of the base metal.

**9.12.2 Root-, Face-, and Side-Bend Tests.** The convex surface of the specimen shall be examined for the appearance of cracks or other open discontinuities. A specimen shall be considered as failed when a crack or other open discontinuity exceeding 1/8 in. [3 mm], measured in any direction, is present after the bending. Cracks occurring on the corners of the specimen may be 1/4 in. [6 mm] maximum length, provided there is no evidence of slag inclusions or other fusion-type discontinuities.

**9.12.3 Macroetch Tests.** The macroetched surfaces of the specimens shall be examined for discontinuities, and the welds shall be considered as failed when discontinuities prohibited by 10.6 are observed on the macroetched surfaces. Partial joint penetration groove welds shall have the designated effective throat. Fillet welds shall show fusion to the root of the joint, but not necessarily beyond, and both legs shall be equal to within 1/8 in. [3 mm]. Convexity shall not exceed the limits specified in 10.7.



Copyright American Welding Society
Provided by IHS under license with AWS
No reproduction or networking permitted without license from IHS
Not for Resale

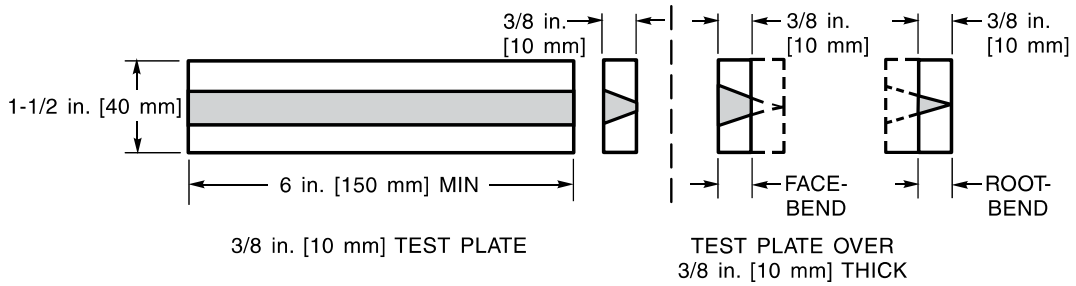


**(1) LONGITUDINAL BEND SPECIMEN**

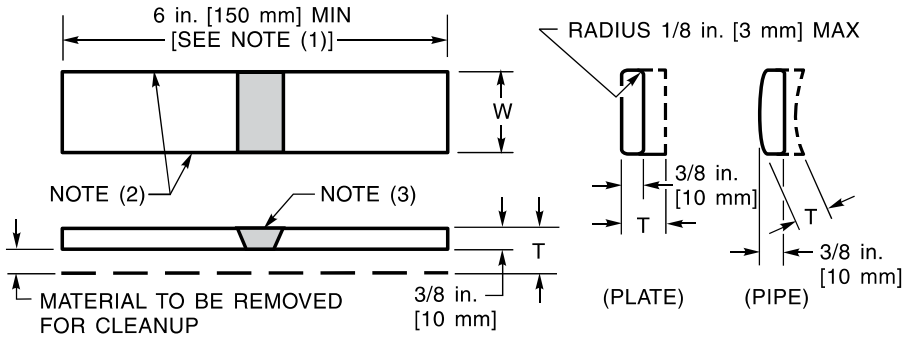


FACE-BEND SPECIMEN

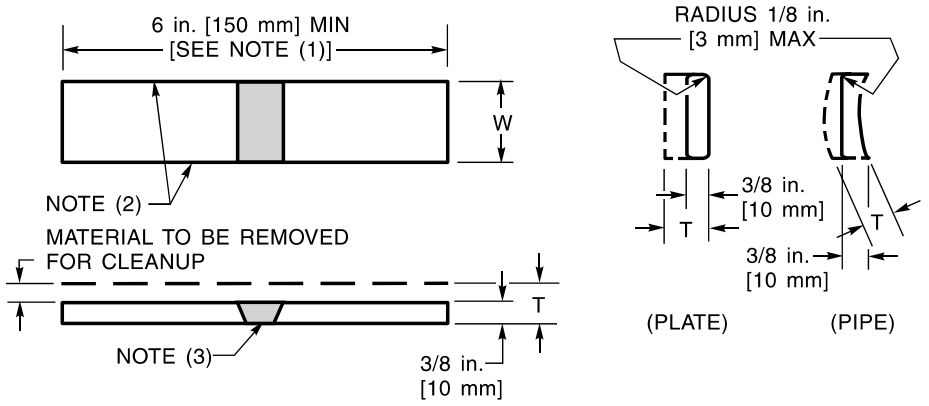


ROOT-BEND SPECIMEN

**(2) TRANSVERSE BEND SPECIMENS**

| Dimensions, in. [mm] | |
|---|---|
| Test Weldment | Test Specimen Width (W) |
| Plate | 1-1/2 [40] |
| Test Pipe 2 [50] and 3 [75] in Diameter | 1 [25] |
| Test Pipe 6 [150] and 8 [200] in Diameter | 1-1/2 [40] |

Notes:
(1) A longer specimen length may be necessary when using a wraparound-type bending fixture or when testing steel with a yield strength of 90 ksi [620 MPa] or more.
(2) These edges may be oxyfuel, plasma, or laser cut.
(3) The weld reinforcement and backing, if any, shall be removed flush with the surface of the specimen. If a recessed backing is used, this surface may be machined to a depth not exceeding the depth of the recess to remove the backing. In such cases, the thickness of the finished specimen shall be that specified above. Cut surfaces shall be smooth and parallel.

General Notes:
1. T = plate or pipe thickness.
2. When the thickness of the test plate is less than 3/8 in. [10 mm], the nominal thickness shall be used for face-bend and root-bend specimens.

## Figure 15C—Face- and Root-Bend Specimens



Copyright American Welding Society
Provided by IHS under license with AWS
No reproduction or networking permitted without license from IHS
Not for Resale

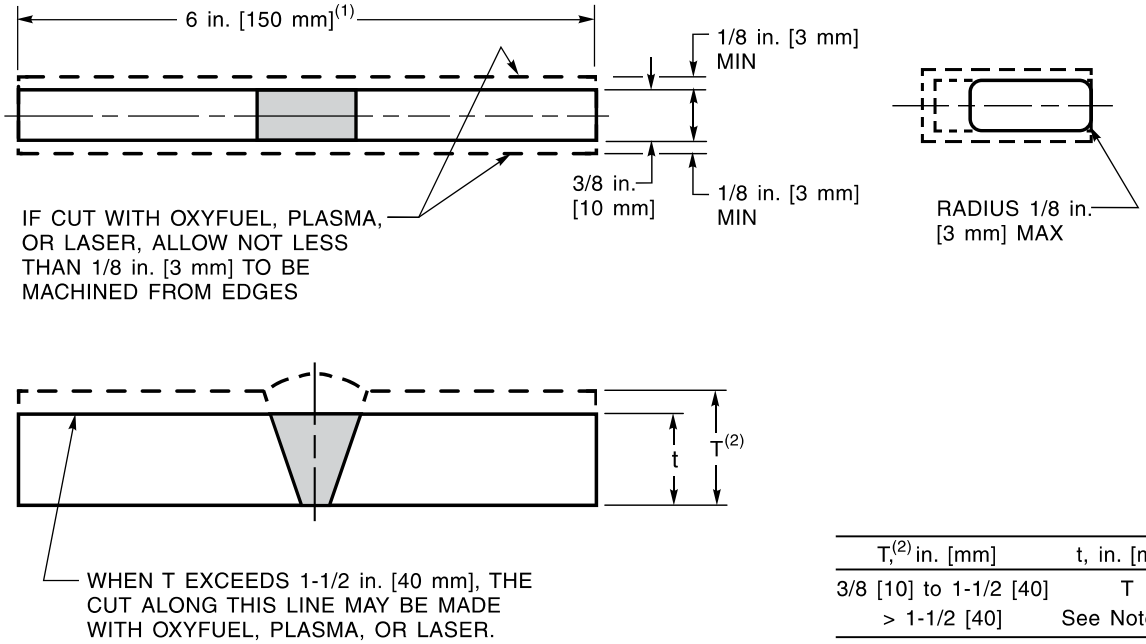


| T,(2) in. [mm] | t, in. [mm] |
|---|---|
| 3/8 [10] to 1-1/2 [40] | T |
| > 1-1/2 [40] | See Note (3) |

Notes:
(1) A longer specimen length may be necessary when using a wraparound-type bending fixture or when testing steel with a yield strength of 90 ksi [620 MPa] or more.
(2) T = plate or pipe thickness.
(3) For plates over 1-1/2 in. [40 mm] thick, the specimen shall be cut into approximately equal strips with the t dimension between 3/4 in. [20 mm] and 1-1/2 in. [40 mm], and each strip shall be tested.

**Figure 15D—Side-Bend Specimens**

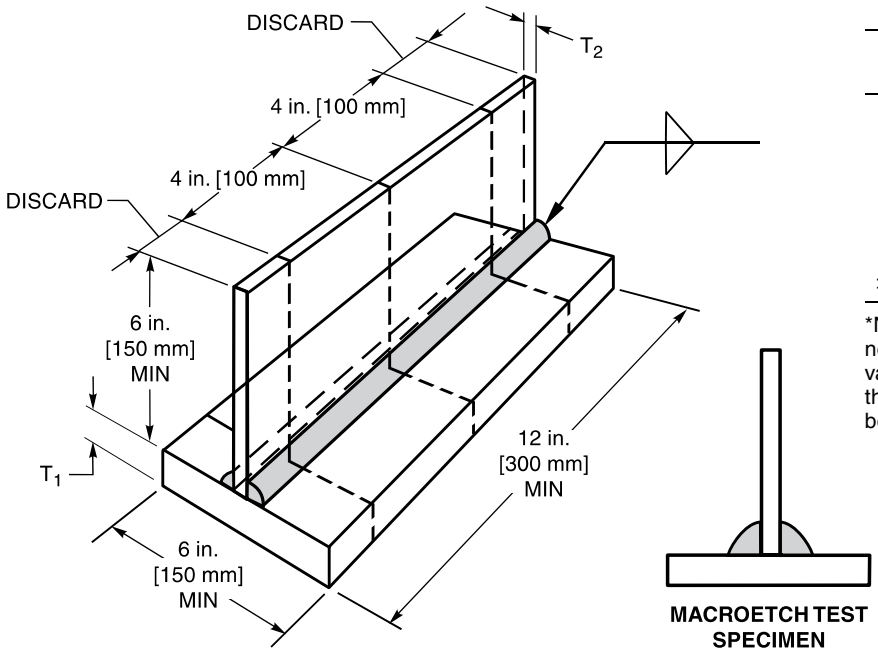


| Weld Size, in. [mm] | $T_1$ MIN,* in. [mm] | $T_2$ MIN,* in. [mm] |
|---|---|---|
| 3/16 [5] | 1/2 [13] | 3/16 [5] |
| 1/4 [6] | 3/4 [20] | 1/4 [6] |
| 5/16 [8] | 1 [25] | 5/16 [8] |
| 3/8 [10] | 1 [25] | 3/8 [10] |
| 1/2 [13] | 1 [25] | 1/2 [13] |
| 5/8 [16] | 1 [25] | 5/8 [16] |
| 3/4 [20] | 1 [25] | 3/4 [20] |
| > 3/4 [20] | 1 [25] | > 1 [25] |

*Note: Where the maximum plate thickness used in production is less than the value shown in the table, the maximum thickness of the production pieces may be substituted for $T_1$ and $T_2$.

**Figure 16—Fillet Weld Soundness Test for Procedure Qualification**



Copyright American Welding Society
Provided by IHS under license with AWS
No reproduction or networking permitted without license from IHS
Not for Resale

**9.12.4 All-Weld-Metal Tension Test (Electroslag and Electrogas).** The mechanical properties shall equal or exceed those specified in Table 12.

**9.12.5 Nondestructive Testing.** The weld soundness, as revealed by either radiographic or ultrasonic testing, shall conform to the requirements of Section 10, Weld Quality and Inspection.

**9.12.6 Visual Inspection—Pipe and Tubing.** For acceptable qualification, a pipe weld shall conform to the following requirements.

**9.12.6.1** The weld shall be free of cracks.

**9.12.6.2** All craters shall be filled to the full cross section of the weld.

**9.12.6.3** The face of the weld shall be at least flush with the outside surface of the pipe, and the weld shall merge smoothly with the base metal. Undercut shall not exceed 1/64 in. [0.5 mm]. Weld reinforcement shall not exceed values given in Table 15.

**9.12.6.4** The root of the weld shall be inspected. There shall be no evidence of cracks, incomplete fusion, or inadequate joint penetration. A concave root surface is permitted within the limits shown in 9.12.6.5, provided the total weld thickness is equal to or greater than that of the base metal.

**9.12.6.5** The root surface concavity shall be 1/16 in. [2 mm] or less, and the melt-through shall be 1/8 in. [3 mm] or less.

**9.12.7 Visual Inspection—Plate.** For acceptable qualification, the welded test plate shall conform to the requirements for visual inspection in Section 10, Weld Quality and Inspection.

**9.13 Records.** Records of the test results shall be kept by the Manufacturer or contractor, and shall be available to those authorized to examine them.

**Table 15**
**Acceptable Reinforcement on Groove Welds in Pipe and Tubing**

| Wall Thickness | | Maximum Reinforcement | |
|---|---|---|---|
| in. | mm | in. | mm |
| ≤ 3/8 | ≤ 10 | 3/32 | 2 |
| > 3/8 to ≤ 3/4 | > 10 to ≤ 20 | 1/8 | 3 |
| > 3/4 | > 20 | 3/16 | 5 |

**9.14 Retests.** If any one tested specimen fails to meet the test requirements, two retests of that particular type of test specimen may be performed with specimens cut from the same procedure qualification test material. The results of both retest specimens shall meet the test requirements. For material over 1-1/2 in. [40 mm] thick, failure of a specimen shall require testing of all specimens of the same type from two additional locations in the test material.

## *Part C*
## *Welder Qualification*

**9.15 General.** The qualification tests described are specially devised to determine a welder's ability to produce sound welds. These tests are not intended to be used as a guide for welding during actual construction. Welding during manufacturing shall be performed in accordance with the requirements of the welding procedure specification.

**9.16 Limitations.** For the qualification of welders, the following rules shall apply:

**9.16.1** Qualification established with any one of the steels permitted by this specification shall be considered as qualification to weld or tack weld any of the other steels.

**9.16.2** A welder shall be qualified for each process used.

**9.16.3** A welder qualified for SMAW with an electrode identified in Table 16 shall be considered qualified to weld, or tack weld, with any other electrode in the same group designation, and with any electrode listed in a numerically lower group designation.

**9.16.4** A welder qualified with an approved electrode-shielding medium combination shall be considered qualified to weld or tack weld with any other approved electrode-shielding medium combination for the process used in the qualification test.

**9.16.5** A change in the position of welding to one for which the welder is not qualified to weld shall require qualification in that position.

**9.16.6** A change from one diameter/thickness grouping of pipe shown in Table 17, Part 2, to another grouping shall require requalification.

**9.16.7** A change in the direction of welding shall require requalification when the plate is in the vertical position, or the pipe or tubing is in the 5G or 6G position.



Copyright American Welding Society
Provided by IHS under license with AWS
No reproduction or networking permitted without license from IHS
Not for Resale

**Table 16**
**SMAW Electrode Groups**

| Group Designation | AWS Electrode Classification(1) |
|---|---|
| F4 | EXX15, EXX16, EXX18, EXX15-X, EXX16-X, EXX18-X, EXX18M |
| F3 | EXX10, EXX11, EXX10-X, EXX11-X |
| F2 | EXX12, EXX13, EXX14, EXX13-X, EXX19 |
| F1 | EXX20, EXX24, EXX27, EXX28, EXX20-X, EXX27-X |

Note:
(1) The letters "XX" used in the classification designations in this table represent the various strength levels 60 ksi [415 MPa], 70 ksi [480 MPa], 80 ksi [550 MPa], 90 ksi [620 MPa, 100 ksi [690 MPa], 110 ksi [760 MPa], and 120 ksi [830 MPa]) of deposited weld metal.

**9.16.8** The omission of backing material in complete joint penetration welds that are welded from one side shall require requalification.

**9.17 Qualification Tests Required**

**9.17.1** The welder qualification tests for manual and semiautomatic welding of plate shall be as follows:

(1) Groove weld qualification test for plate of unlimited thickness.

(2) Groove weld qualification test for plate of limited thickness.

(3) Fillet weld qualification test for fillet welds only, Option 1 or 2 (see 9.22).

**9.17.2** The pipe or tubing qualification tests for manual and semiautomatic welding shall be as follows:

(1) Groove weld qualification test for butt joints in pipe or tubing.

(2) Groove weld qualification test for T-, Y-, or K-connections in pipe or tubing.

**9.17.3** A welder who makes a successful procedure qualification test of a complete joint penetration groove weld in flat plate is qualified to weld production plate with the welding process and in the position used in the test. The thickness range qualified for and the number of test specimens required shall be as specified in Table 17, Part 1. The welder is also qualified to make fillet welds in plate and pipe, as shown in Table 18.

**9.17.4** The welder who makes a successful procedure qualification test of a complete joint penetration groove weld in pipe without a backing strip is qualified to weld pipe and tubing with the process and in the position used in the test. The diameter and wall thickness ranges qualified for and the number of test specimens required shall be as specified in Table 17, Part 2.

**9.18 Groove Weld Plate Qualification Test for Plate of Unlimited Thickness.** The joint detail shall be as follows: 1 in. [25 mm] plate, single-V-groove, 45° included angle, 1/4 in. [6.4 mm] root opening with backing (see Figure 17A). For horizontal position qualification, the joint detail may, at the contractor's option, be a single-bevel-groove, 45° groove angle, 1/4 in. [6.4 mm] root opening with backing (see Figure 17B). Backing shall be at least 3/8 in. [10 mm] × 3 in. [75 mm] if radiographic testing is used without prior removal of backing. Backing shall be at least 3/8 in. [10 mm] × 2 in. [50 mm] for mechanical testing or for radiographic testing after the backing is removed. The minimum length of the weld groove shall be 5 in. [125 mm].

**9.19 Groove Weld Plate Qualification Test for Plate of Limited Thickness.** The joint detail shall be as follows: 3/8 in. [10 mm] plate, single-V-groove, 45° included angle, 1/4 in. [6.4 mm] root opening with backing (see Figure 18A). For horizontal position qualification, the joint detail may, at the contractor's option, be single bevel groove, 45° groove angle, 1/4 in. [6.4 mm] root opening with backing (see Figure 18B). Backing shall be at least 3/8 in. [10 mm] × 3 in. [75 mm] if radiographic testing is used without prior removal of the backing. Backing shall be at least 3/8 in. [10 mm] × 2 in. [50 mm] for mechanical testing or for radiographic testing after the backing is removed. The minimum length of the weld groove shall be 5 in. [125 mm].

**9.20 Groove Weld Qualification Test for Butt Joints in Pipe or Tubing.** The joint detail shall be that shown in a qualified welding procedure specification for a single-welded pipe butt joint. Alternatively, the joint may be prepared in job-sized pipe with a single V-groove, 60° included angle, 1/8 in. [3 mm] maximum root face and root opening without backing (see Figure 19A), or a single-V-groove, 60° included angle, and suitable root opening with backing (see Figure 19B).

**9.21 Groove Weld Qualification Test for T-, Y-, and K-Connections on Pipe or Tubing.** The test joint design is shown in Figure 20. The joint detail shall be as follows: single bevel groove, 37.5° included angle, 1/16 in. [2 mm] maximum root face, 1/8 in. [3 mm] root opening with the bevel on a pipe or tube that is at least 1/2 in. [13 mm] thick. The square edge pipe or tube shall be at least 1/16 in. [2 mm] thicker than the beveled pipe. A restriction ring shall be placed on the thicker pipe within 1/2 in. [13 mm] of the joint, and shall extend at least 6 in. [150 mm] beyond the surface of the pipe or tube (see Figure 20). Test specimens for side bends shall be taken as indicated in Figure 21 and machined as standard specimens with parallel sides.



Copyright American Welding Society
Provided by IHS under license with AWS
No reproduction or networking permitted without license from IHS
Not for Resale

## Table 17
## Number and Type of Test Specimens and Range of Thickness Qualified—Welder and Welding Operator Qualification

### 1. Tests on Plate

| Type of Weld | Thickness of Test Plate (T) As Welded, in. [mm] | Visual Inspection | Number of Specimens: Bend Tests[1] Face | Root | Side | T-Joint Break | Macroetch Test | Plate Thickness Qualified, in. [mm] |
|---|---|---|---|---|---|---|---|---|
| Groove[2] | 3/8 [10] | Yes | 1 | 1 | — | — | — | 3/4 [20] max[3] |
| Groove | 3/8 [10] < T < 1 [25] | Yes | — | — | 2 | — | — | T/2–2T[3], [4] |
| Groove | ≥ 1 [25] or over | Yes | — | — | 2 | — | — | Unlimited[3] |
| Fillet option No. 1[5] | 1/2 [13] | Yes | — | — | — | 1 | 1 | Unlimited |
| Fillet option No. 2[6] | 3/8 [10] | Yes | — | 2 | — | — | — | Unlimited |

Notes:
(1) Radiographic examination of the welder or welding operator test plate may be made in lieu of the bend test (see 9.3.2).
(2) Not applicable for welding operator qualification.
(3) Also qualifies for welding fillet welds on material of unlimited thickness.
(4) T is the maximum for welding operator qualification.
(5) See Figure 21.
(6) See Figure 22.

### 2. Tests on Pipe or Tubing

| Type of Weld | Pipe or Tubing Size, As Welded: Diam., in. [mm] | Thickness | Visual Inspection | Number of Specimens: All Positions Except 5G & 6G: Face Bend | Root Bend | Side Bend | 5G & 6G Positions Only: Face Bend | Root Bend | Side Bend | Pipe or Tube Size Qualified, in. [mm] | Pipe or Tube Wall Thickness Qualified, in. [mm]: Min | Max[8] |
|---|---|---|---|---|---|---|---|---|---|---|---|---|
| Groove | 2 [50] or 3 [75] | Sch. 80 or Sch. 40 | Yes | 1 | 1 | — | 2 | 2 | — | ≤ 4 [100] | 0.125 [3] | 0.674 [17] |
| | 6 [150] or 8 [200] | Sch. 120 or Sch. 80 | Yes | — | — | 2 | — | — | 4 | > 4 [100] | 0.187 [5] | Unlimited |
| | See Figure 20 | | Yes | — | — | — | — | — | 4 | T-, Y-, and K-connections | — | Unlimited |
| | Job Size Pipe or Tubing | | | | | | | | | | | |
| Type of Weld | Diam., in. [mm] | Wall Thickness | | | | | | | | | | |
| Groove | ≤ 4 [100] | Any | Yes | 1 | 1 | — | 2 | 2 | — | ≥ 3/4 [20] to ≤ 4 [100] | 0.125 [3] | 0.674 [17] |
| | > 4 [100] | < 3/8 [10] | Yes | 1 | 1 | — | 2 | 2 | — | 1/2 test diameter or 4 [100] min.[9] | 0.125 [3] | 0.674 [17] |
| | > 4 [100] | ≥ 3/8 [10] | Yes | — | — | 2 | — | — | 4 | | 0.187 [5] | Unlimited |

Notes:
(7) Radiographic examination of the welder or welding operator test plate may be made in lieu of the bend test (see 9.3.2).
(8) Also qualifies for welding fillet welds of material of unlimited thickness.
(9) Minimum pipe size qualified shall not be less than 4 in. [100 mm] or 1/2d, whichever is greater, where d is diameter of test pipe.

(continued)



Copyright American Welding Society
Provided by IHS under license with AWS
No reproduction or networking permitted without license from IHS
Not for Resale

## Table 17 (Continued)
## Number and Type of Test Specimens and Range of Thickness Qualified—Welder and Welding Operator Qualification

**3. Tests on Electroslag and Electrogas Welds**

| Plate Thickness Tested, in. [mm] | Number of Sample Welds | Test Specimens Required | | Plate Thickness Qualified, in. [mm] |
|---|---|---|---|---|
| | | Visual Inspection | Side Bend[10] | |
| 1-1/2 [40] max | 1 | Yes | 2 | Unlimited for 1-1/2 [40]<br>Max tested for <1-1/2 [40] |

Note:
(10) Radiographic examination of the welder or welding operator test plate may be made in lieu of the bend test (see 9.3.2).

## Table 18
## Welder Qualification—Type and Position Limitations

| Qualification Test | | Type of Weld and Position of Welding Qualified[1] | | | |
|---|---|---|---|---|---|
| | | Plate | | Pipe | |
| Weld | Plate or Pipe Positions | Groove | Fillet | Groove | Fillet |
| Plate-Groove[2] | 1G | F | F, H | F[3] | F, H[3] |
| | 2G | F, H | F, H | F, H[3] | F, H[3] |
| | 3G | F, H, V | F, H, V | | F, H |
| | 4G | F, OH | F, H, OH | | F |
| | 3G and 4G | All | All | | F, H |
| Plate-Fillet[2], [4] | 1F | | F | | F |
| | 2F | | F, H | | F, H |
| | 3F | | F, H, V | | |
| | 4F | | F, H, OH | | |
| | 3F and 4F | | All | | |
| Pipe-Groove | 1G Rotated | F | F, H | F | F, H |
| | 2G | F, H | F, H | F, H | F, H |
| | 5G | F, V, OH | F, V, OH | F, V, OH | F, V, OH |
| | 6G | Note (5) | Note (5) | Note (5) | Note (5) |
| | 2G and 5G | Note (5) | Note (5) | Note (5) | Note (5) |
| | 6GR | All | All | All | All |

Notes:
(1) Positions of welding: F = flat, H = horizontal, V = vertical, OH = overhead.
(2) Not applicable for welding operator qualification [see 9.34(5)].
(3) Welding operators qualified to weld pipe or tubing over 24 in. [600 mm] in diameter for the test positions indicated.
(4) Not applicable for fillet welds between parts having a dihedral angle of 75° or less.
(5) Qualifies for all but groove welds for T-, Y-, and K-connections.



Copyright American Welding Society
Provided by IHS under license with AWS
No reproduction or networking permitted without license from IHS
Not for Resale

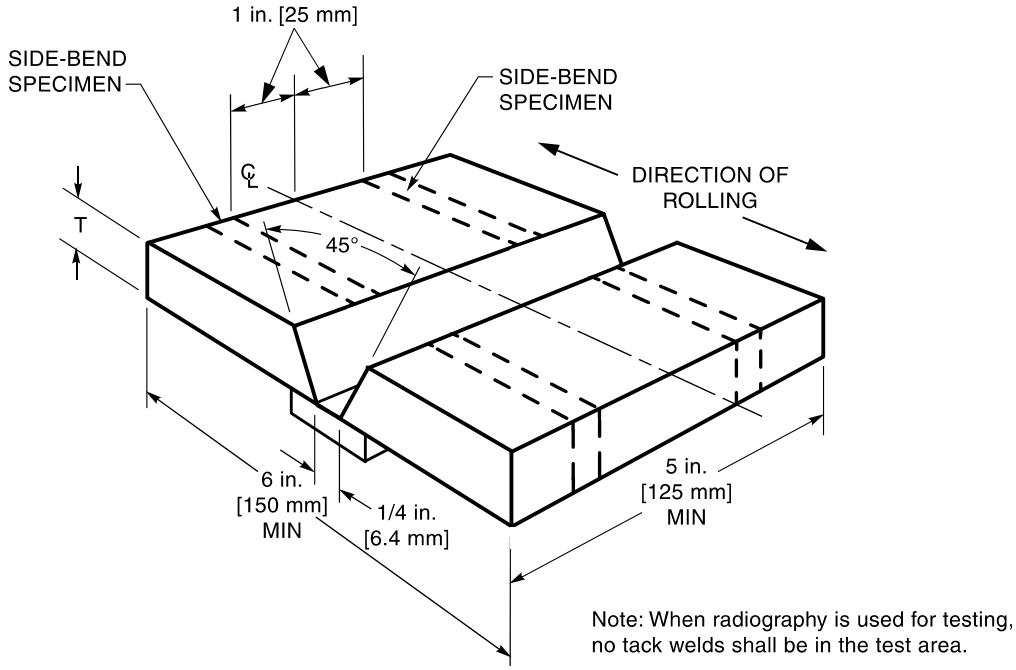


**Figure 17A—Test Plate for Unlimited Thickness—Welder Qualification**

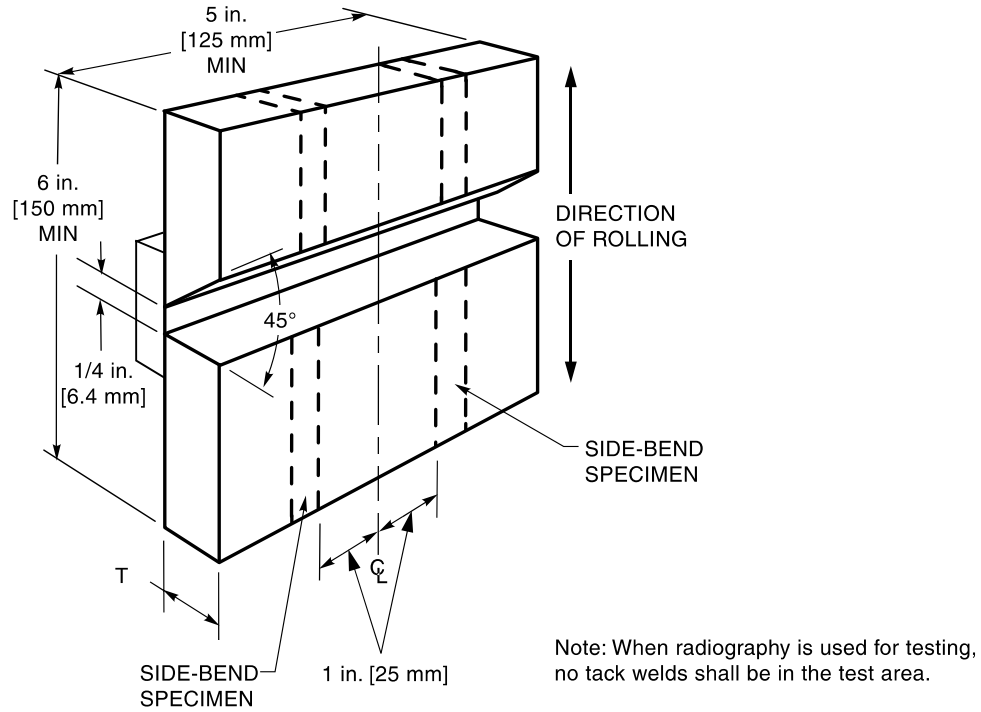


**Figure 17B—Optional Test Plate for Unlimited Thickness, Horizontal Position—Welder Qualification**



Copyright American Welding Society
Provided by IHS under license with AWS
No reproduction or networking permitted without license from IHS
Not for Resale

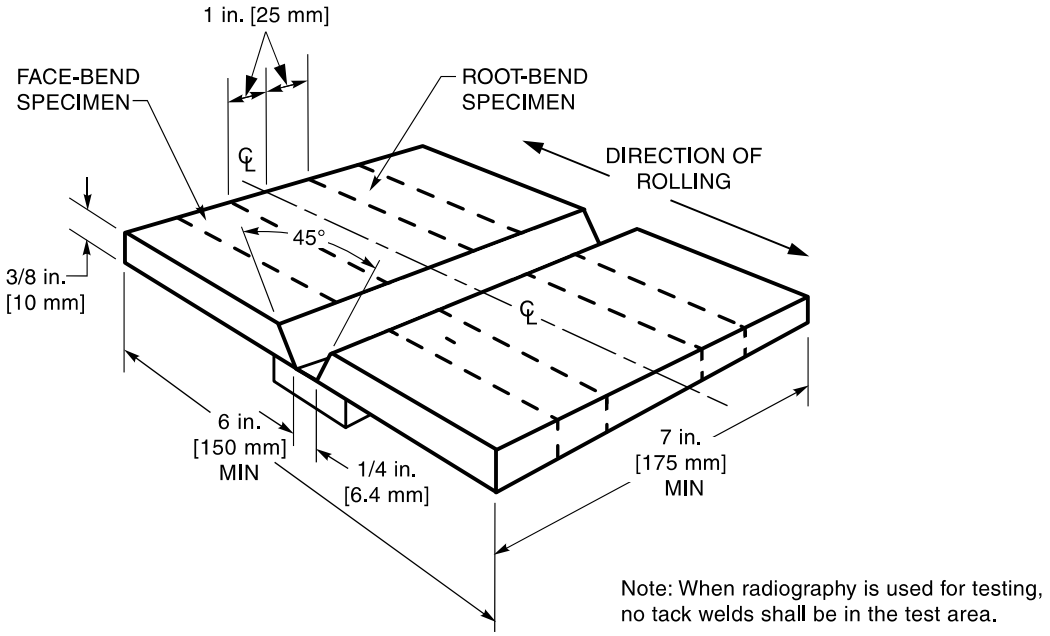


**Figure 18A—Test Plate for Limited Thickness, All Positions—Welder Qualification**

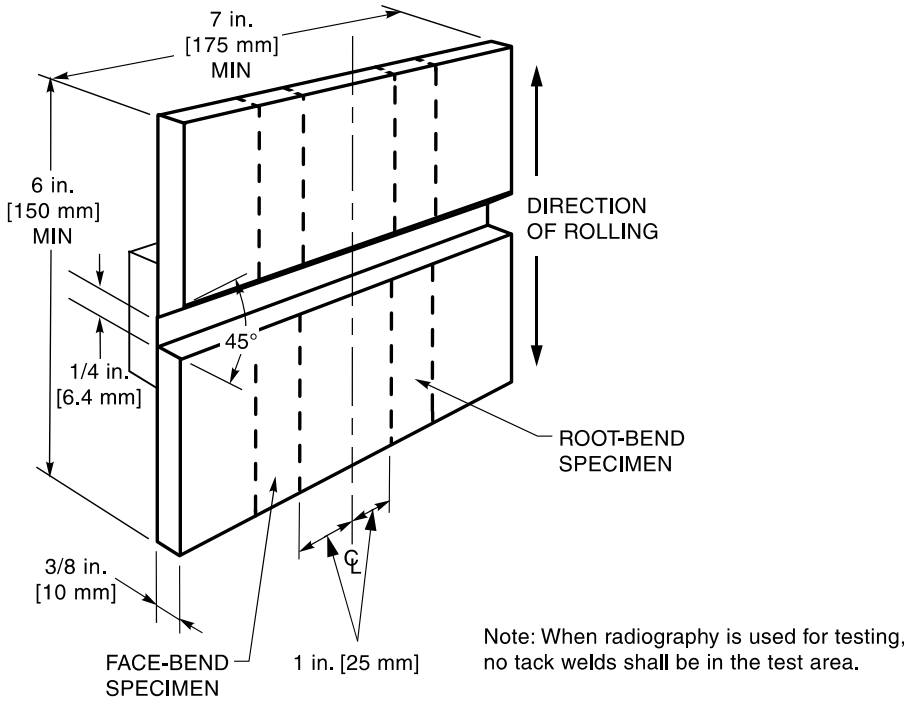


**Figure 18B—Optional Test Plate for Limited Thickness, Horizontal Position—Welder Qualification**



Copyright American Welding Society
Provided by IHS under license with AWS
No reproduction or networking permitted without license from IHS
Not for Resale

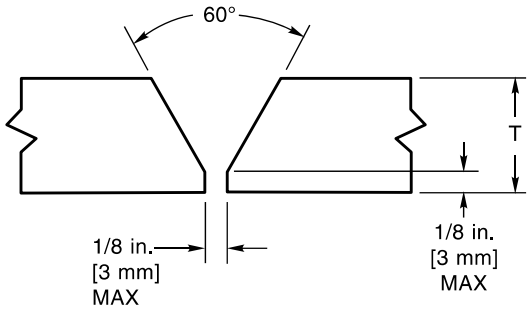


**Figure 19A—Pipe Test Butt Joint without Backing—Welder Qualification**

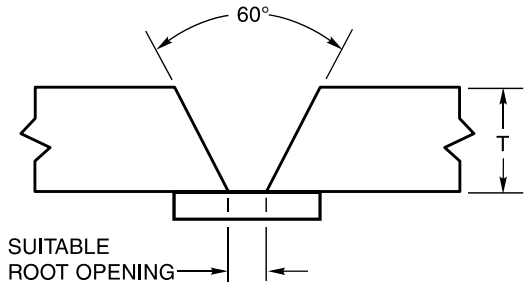


**Figure 19B—Pipe Test Butt Joint with Backing—Welder Qualification**

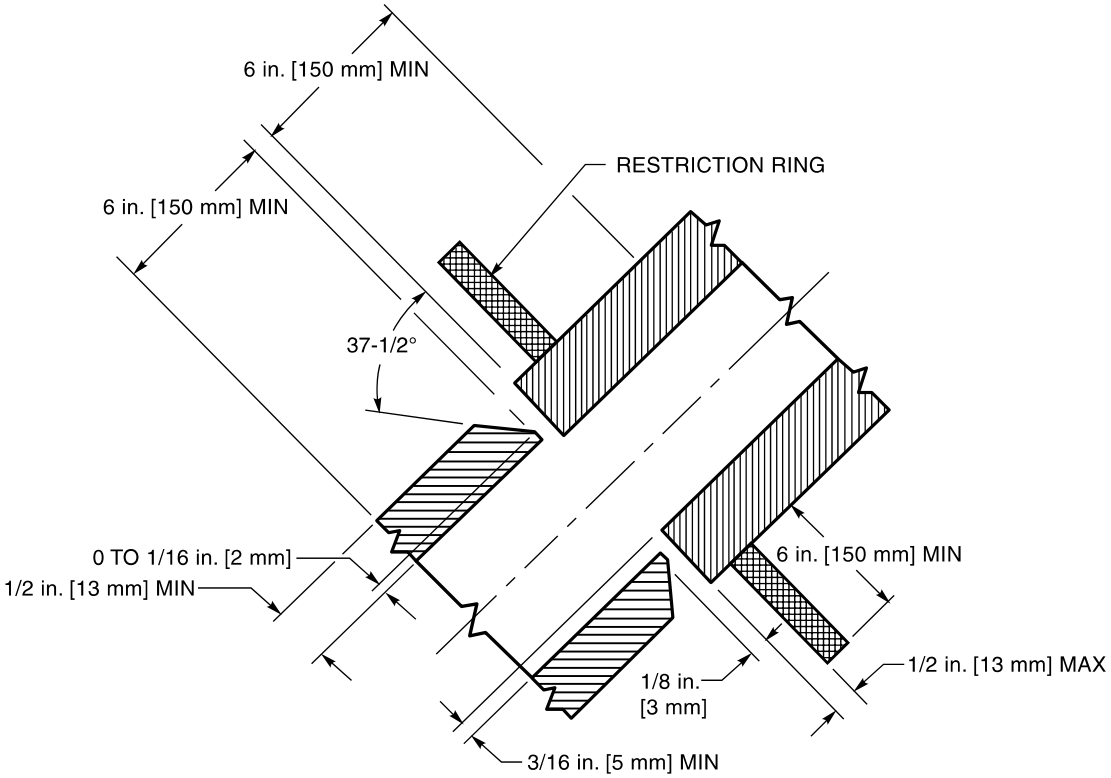


**Figure 20—Test Joint for T-, Y-, and K- Connections on Pipe or Tubing—Welder Qualification**



Copyright American Welding Society
Provided by IHS under license with AWS
No reproduction or networking permitted without license from IHS
Not for Resale

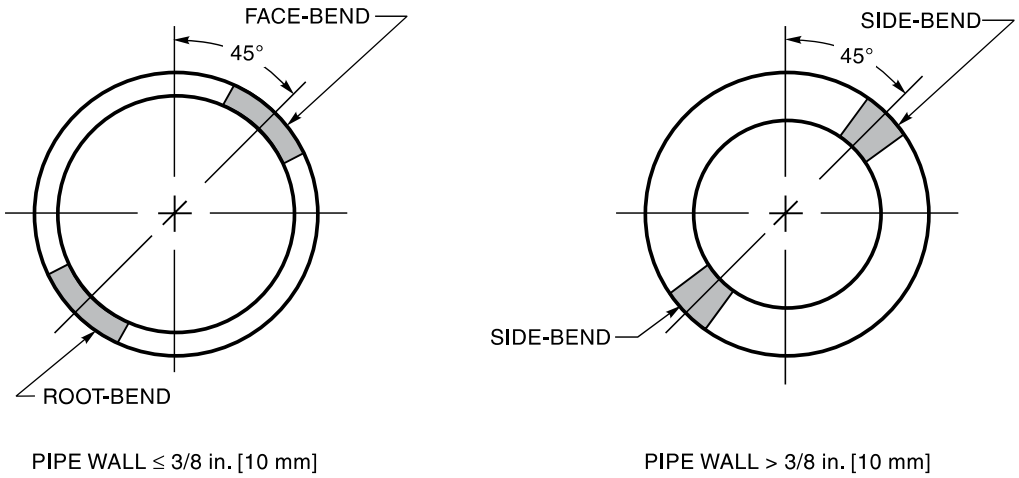


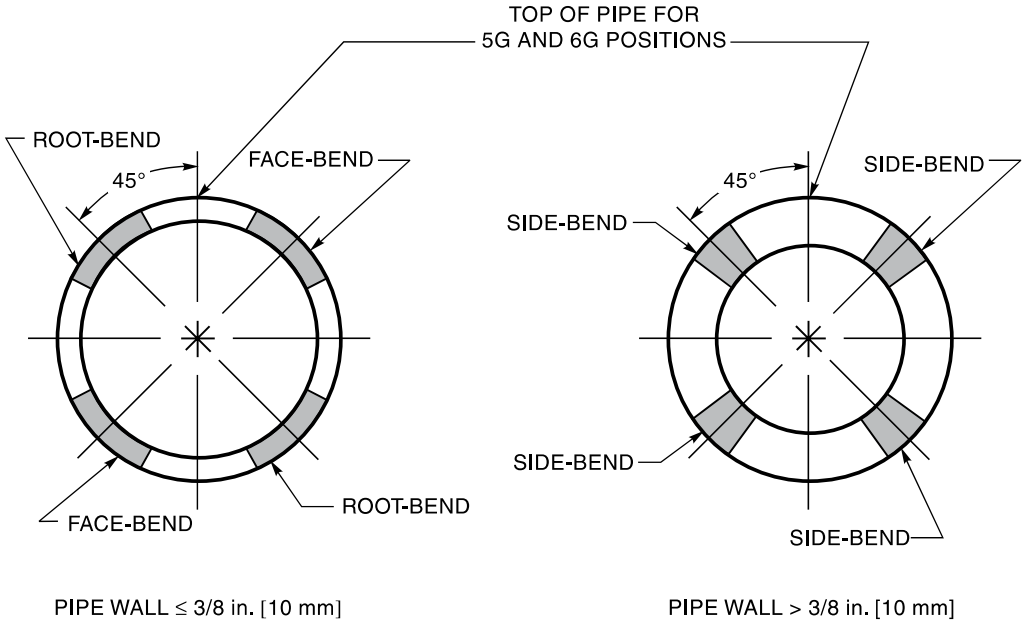


**Figure 21—Location of Test Specimens on Welded Test Pipe—Welder Qualification**



Copyright American Welding Society
Provided by IHS under license with AWS
No reproduction or networking permitted without license from IHS
Not for Resale

**9.22 Fillet Weld Qualification Test.** For fillet weld qualification only, the welder shall weld a test plate according to Option 1 or Option 2, depending on the contractor's choice, as follows:

(1) Option 1—Weld a T-test plate in accordance with Figure 22.

(2) Option 2—Weld a soundness test plate in accordance with Figure 23.

**9.23 Position of Test Welds.** The positions shall be as listed in Table 17.

**9.23.1 Groove Plate Test Welds**

**9.23.1.1** Qualification in the 1G (flat) position qualifies the welder for flat-position groove welding of plate, pipe, and tubing, and flat- and horizontal-position fillet welding of plate, pipe, and tubing.

**9.23.1.2** Qualification in the 2G (horizontal) position qualifies the welder for flat- and horizontal-position groove welding, and flat- and horizontal-position fillet welding of plate, pipe, and tubing.

**9.23.1.3** Qualification in the 3G (vertical) position qualifies the welder for flat-, horizontal-, and vertical-position groove welding, and flat-, horizontal-, and vertical-position fillet welding of plate; and flat- and horizontal-position fillet welding of pipe and tubing.

**9.23.1.4** Qualification in the 4G (overhead) position qualifies the welder for flat- and overhead-position groove welding, and flat-, horizontal-, and overhead-position fillet welding of plate; and flat-position fillet welding of pipe and tubing.

**9.23.2 Groove Pipe Test Welds**

**9.23.2.1** Qualification in the 1G (pipe horizontal, rotated) position qualifies the welder for flat-position groove welding of pipe, tubing, and plate; and flat- and horizontal-position fillet welding of pipe, tubing, and plate.

**9.23.2.2** Qualification in the 2G (pipe vertical) position qualifies the welder for flat- and horizontal-position groove welding and flat- and horizontal-position fillet welding of pipe, tubing, and plate.

**9.23.2.3** Qualification in the 5G (pipe horizontal, fixed) position qualifies the welder for flat-, vertical-, and overhead-position groove welding and flat-, vertical-, and overhead-position fillet welding of pipe, tubing, and plate.

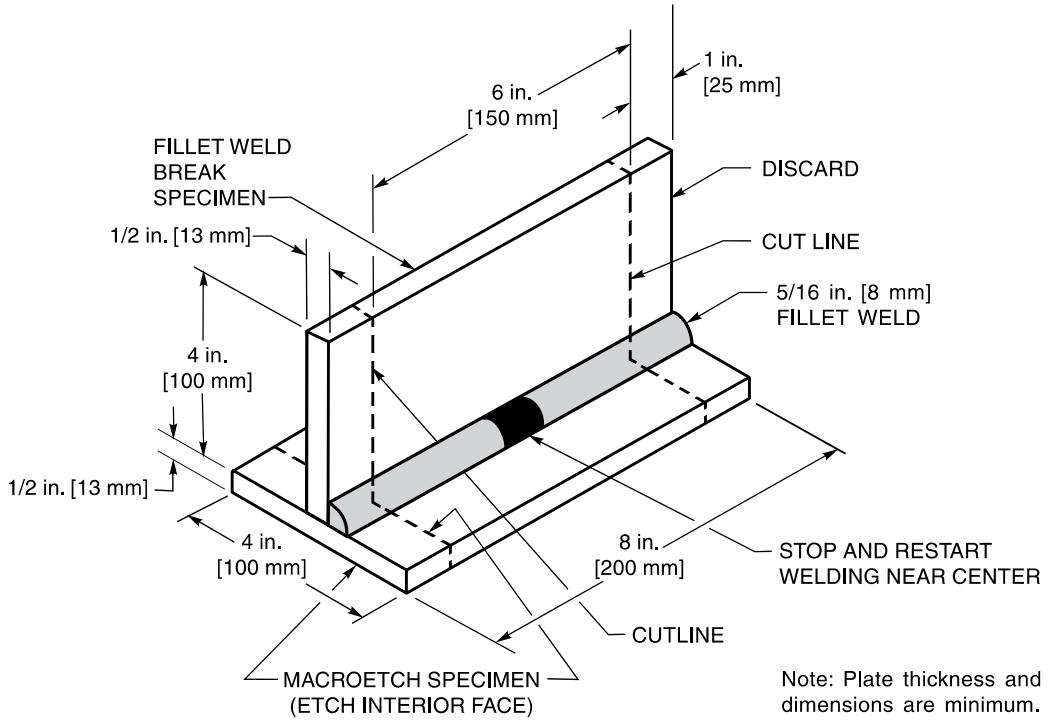


**Figure 22—Fillet Weld Break and Macroetch Test Plate—Welder Qualification, Option 1**



Copyright American Welding Society
Provided by IHS under license with AWS
No reproduction or networking permitted without license from IHS
Not for Resale

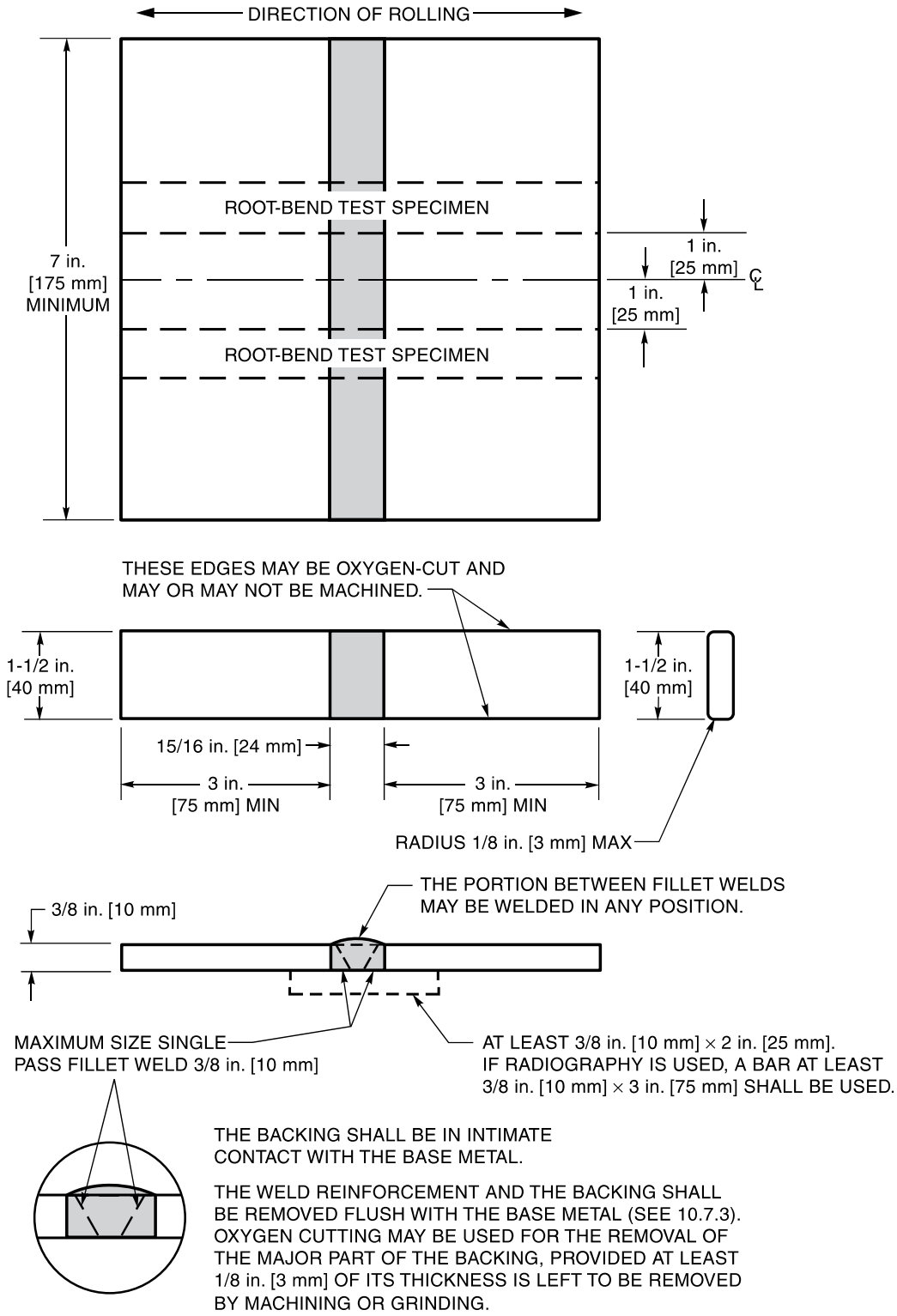


**Figure 23—Fillet Weld Root-Bend Test Plate—Welder Qualification, Option 2**



Copyright American Welding Society
Provided by IHS under license with AWS
No reproduction or networking permitted without license from IHS
Not for Resale

**9.23.2.4** Qualification in the 6G (inclined, fixed) position qualifies the welder for all-position groove and all-position fillet welding of pipe, tubing, and plate.

**9.23.2.5** Qualification for T-, Y-, or K-connections in the 6GR (inclined, fixed) position qualifies the welder for groove welding of T-, Y-, or K-connections, and for groove and fillet welding of pipe, tubing, and plate in all positions.

**9.23.3 Fillet Weld Test**

**9.23.3.1** Qualification in the 1F (flat) position qualifies the welder for flat-position welding of plate, pipe, and tubing.

**9.23.3.2** Qualification in the 2F (horizontal) position qualifies the welder for flat- and horizontal-position fillet welding of plate, pipe, and tubing.

**9.23.3.3** Qualification in the 3F (vertical) position qualifies the welder for flat-, horizontal-, and vertical-position fillet welding of plate.

**9.23.3.4** Qualification in the 4F (overhead) position qualifies the welder for flat-, horizontal-, and overhead-position fillet welding of plate.

**9.24 Base Metal.** The base metal used shall comply with the welding procedure specification.

**9.25 Joint Welding Procedure**

**9.25.1** The welder shall follow a joint welding procedure specification applicable to the joint details given in 9.18, 9.19, 9.20, 9.21, or 9.22, whichever is applicable. For complete joint penetration groove welds that are welded from one side without backing, the welder shall follow a welding procedure specification applicable to the joint detail shown in Figure 19A.

**9.25.2** Weld cleaning shall be done with the test weld in the same position as the welding position being qualified.

**9.26 Test Specimens**

**9.26.1** The type and number of test specimens that shall be tested to qualify a welder by mechanical testing are given in Table 18. The range of thickness that can be welded in construction, which depends on the thickness of the test plate, is also given in the table. Radiographic examination of the test weld may be used in lieu of mechanical testing at the contractor's option.

**9.26.2** Guided bend test specimens shall be prepared by cutting the test plate, pipe, or tubing as shown in Figures 17A and 17B, 18A and 18B, 21 or 23, whichever is applicable, to form specimens approximately rectangular in cross section. The specimens shall be prepared for testing in accordance with Figures 15A through 15D, whichever is applicable.

**9.26.3** The fillet weld break and macroetch test specimens shall be cut from the test joint as shown in Figure 22. The exposed section of the macroetch test specimen shall be smoothed for etching.

**9.26.4** The weld reinforcement need not be ground or otherwise smoothed for inspection when radiographic testing is used in lieu of the prescribed bend tests, unless surface irregularities or juncture with the base metal would cause objectionable weld discontinuities to be obscured in the radiograph. If the backing is removed for radiographic testing, the root shall be ground flush with the base metal (see 10.7.3).

**9.27 Method of Testing Specimens**

**9.27.1 Root-, Face-, and Side-Bend Specimens.** Each specimen shall be bent in a guided bend test jig that meets the requirements shown in Figure 24A, 24B, or 24C, or is substantially in accordance with those figures, provided the maximum bend radius is not exceeded. The plunger member (if used) may be moved with relation to the die member by any convenient means.

**9.27.1.1** Face-bend specimens shall be oriented so that the face of the weld will be in tension. Root-bend and fillet weld Option No. 2 soundness specimens shall be oriented so that the root of the weld will be in tension. Side-bend specimens shall be oriented so that the side showing the larger discontinuity, if any, will be in tension.

**9.27.1.2** The specimen shall be forced into the die or wrapped around member "A" of the wraparound jig until it assumes a U-shape. The weld and heat-affected zones shall be completely within the bent portion of the specimen after bending.

**9.27.1.3** When using a wraparound jig (see Figure 24B), the specimen shall be firmly clamped on one end so that the specimen does not slide during the bending operation. The weld and heat-affected zones shall be completely within the bent portion of the specimen after testing. The test specimen shall be removed from the jig after the outer roll has been moved 180° from the starting point.

**9.27.2 Fillet Weld Break Test (Option No. 1).** The entire length of the fillet weld shall be examined visually, and then a 6 in. [150 mm] long specimen shall be cut from the sample and loaded in such a way that the root of the weld is in tension. The load shall be steadily increased or repeated until the specimen fractures or bends flat upon itself.

**9.27.3 Macroetch Test (Fillet Option No. 1).** The test specimens shall be suitably smoothed for macroetch



Copyright American Welding Society
Provided by IHS under license with AWS
No reproduction or networking permitted without license from IHS
Not for Resale

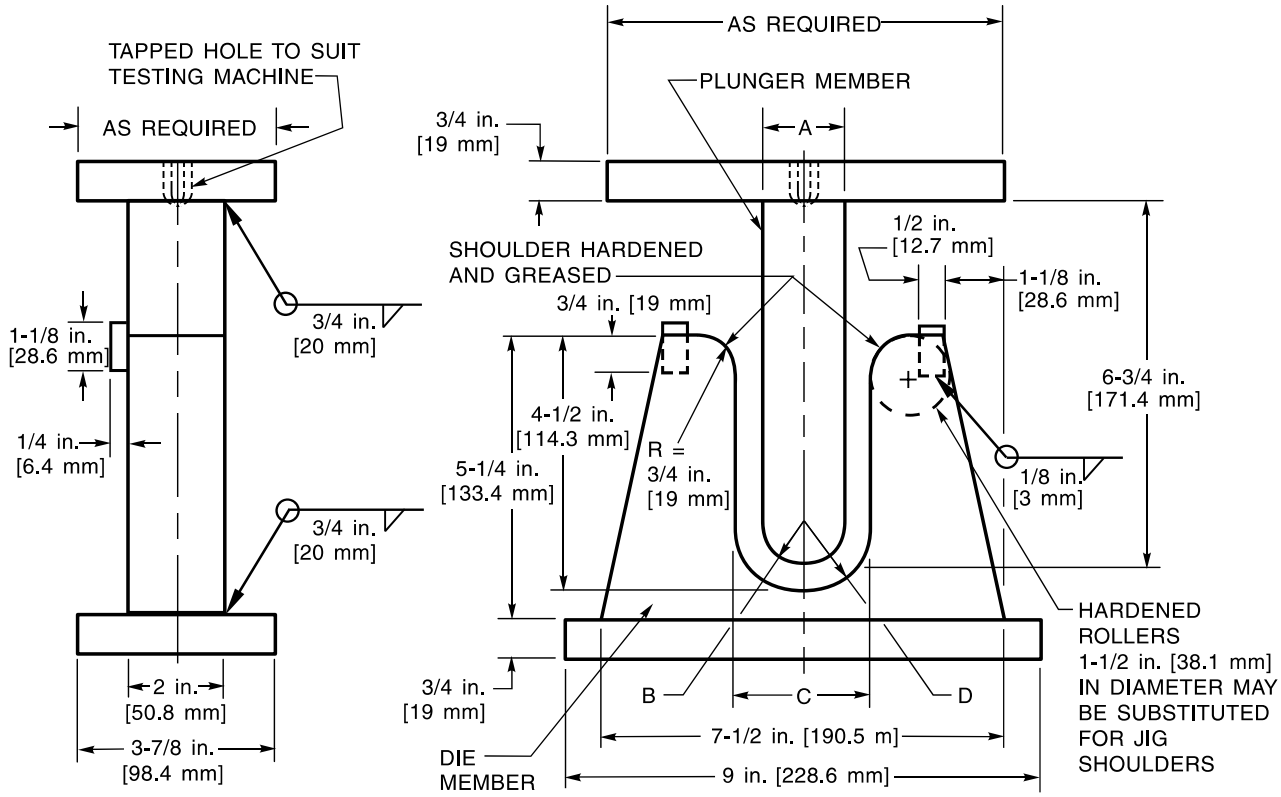


| Specified or Actual Base Metal Yield Strength, ksi [MPa] | A in. [mm[ | B in. [mm] | C in. [mm] | D in. [mm] |
|---|---|---|---|---|
| 50 [345] & Under | 1-1/2 [38.1] | 3/4 [19.0] | 2-3/8 [60.3] | 1-3/16 [30.2] |
| Over 50 [345] to 90 [620] | 2 [50.8] | 1 [25.4] | 2-7/8 [73.0] | 1-7/16 [36.6] |
| 90 [620] & Over | 2-1/2 [63.5] | 1-1/4 [31.8] | 3-3/8 [85.7] | 1-11/16 [42.9] |

General Note: Plunger and interior die surfaces shall be machine-finished.

*Source:* AWS D1.1/D1.1M:2004, Figure 4.15, as adapted from AWS B4.0-98, Figure A2.

**Figure 24A—Guided-Bend Test Jig—Standard Design**

examination. A suitable solution (such as hot ammonium persulfate) shall be used for etching to give a clear definition of the weld.

**9.27.4 Radiographic.** The radiographic procedure and technique shall be in accordance with the requirements of Section 10, Weld Quality and Inspection. Only the center 50% of the test plate length shall be subject to examination. Welded test pipe or tubing 4 in. [100 mm] in diameter or larger shall be examined for a minimum of one-half of the weld perimeter selected to include a sample of all positions welded. Welded test pipe or tubing less than 4 in. [100 mm] in diameter shall require 100% radiography.

### 9.28 Test Results Required

**9.28.1 Root-, Face-, and Side-Bend Tests.** The convex surface of the bent specimen shall be examined visually for discontinuities. Any bent specimen in which a crack or other open discontinuity exceeding 1/8 in. [3 mm] in any direction is present shall be considered as having failed. Cracks occurring on the corners of the specimen may be 1/4 in. [6 mm] maximum length, pro-



Copyright American Welding Society
Provided by IHS under license with AWS
No reproduction or networking permitted without license from IHS
Not for Resale

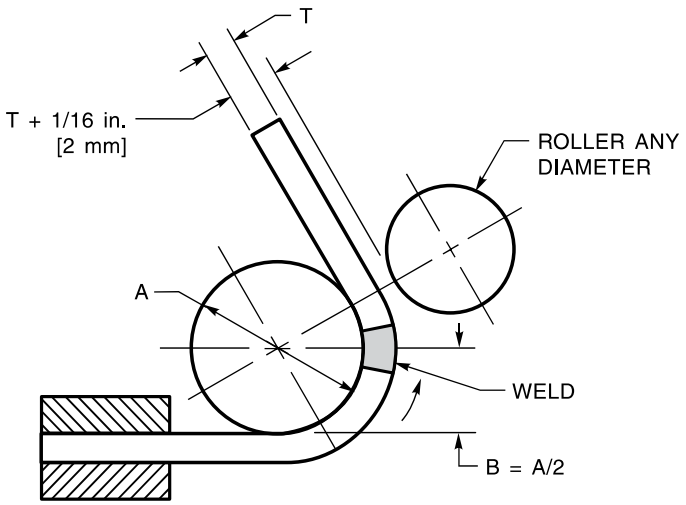


| Specified or Actual Base Metal Yield Strength, ksi [MPa] | A in. [mm] | B in. [mm] |
|---|---|---|
| 50 [345] & Under | 1-1/2 [38.1] | 3/4 [19.0] |
| Over 50 [345] to 90 [620] | 2 [50.8] | 1 [25.4] |
| 90 [620] & Over | 2-1/2 [63.5] | 1-1/4 [31.8] |

General Note: Plunger and interior die surfaces shall be machine-finished.

*Source:* AWS D1.1/D1.1M:2004, Figure 4.16, as adapted from AWS B4.0-98, Figure A1.

**Figure 24B—Alternative Guided-Bend Test Jig—Wraparound Design**

vided there is no evidence of slag inclusions or other fusion-type discontinuities.

**9.28.2 Fillet Weld Break Test**

**9.28.2.1** To pass visual examination, the fillet weld shall present a reasonably uniform appearance and shall be free of overlap, cracks, and excessive undercut. There shall be no porosity visible on the surface of the weld.

**9.28.2.2** The fillet weld specimen passes the test if it bends flat upon itself. If the fillet weld fractures, the fractured surface shall show complete fusion to the root of the joint, and exhibit no inclusion or porosity larger than 3/32 in. [2.5 mm] in the greatest dimension to pass the test. The sum of the greatest dimensions of all inclusions and porosity at the fractured surface shall not exceed 3/8 in. [10 mm] in the 6 in. [150 mm] long specimen.

**9.28.3 Macroetch Test.** The specimen shall be examined for discontinuities. If discontinuities prohibited by Section 10, Weld Quality and Inspection, are found, the test shall be considered as failed. The weld shall show fusion to the root, but not necessarily beyond, and both legs shall be equal to within 1/8 in. [3 mm]. Convexity shall not exceed the limits specified in 10.7, e.g., 1/16 in. [2 mm] for a 5/16 in. [8 mm] test weld.

**9.28.4 Radiographic Test.** To qualify, the weld, as revealed by the radiograph, shall conform to the requirements of Section 10.

**9.28.5 Visual Inspection of Pipe and Tubing** (see 9.12.6)

**9.28.6 Visual Inspection of Plate.** For acceptable qualification, the welded test plates shall conform to the requirements for visual inspection in Section 10.

**9.29 Retests.** If one or more test welds made by a welder fails to meet the requirements, a retest may be allowed under the following conditions:

(1) An immediate retest may be made consisting of two welds of each type on which the welder failed. The retest specimens shall meet all the specified requirements.



Copyright American Welding Society
Provided by IHS under license with AWS
No reproduction or networking permitted without license from IHS
Not for Resale

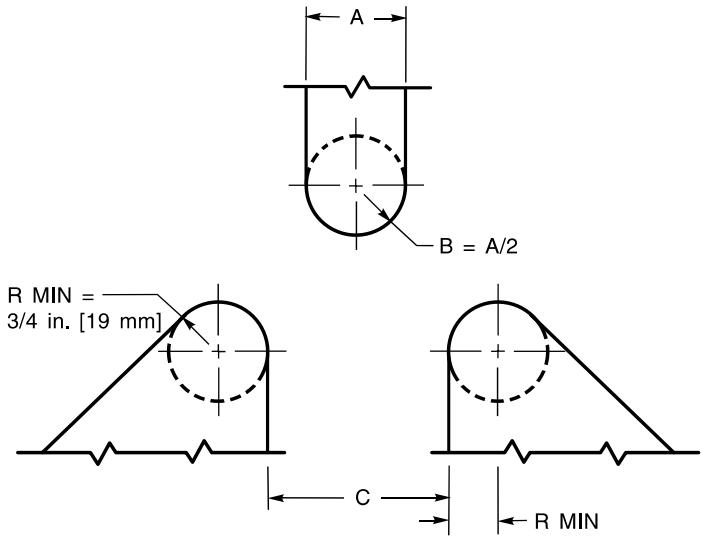


| Specified or Actual Base Metal Yield Strength, ksi [MPa] | A in. [mm] | B in. [mm] | C in. [mm] |
|---|---|---|---|
| 50 [345] & Under | 1-1/2 [38.1] | 3/4 [19.0] | 2-3/8 [60.3] |
| Over 50 [345] to 90 [620] | 2 [50.8] | 1 [25.4] | 2-7/8 [73.0] |
| 90 [620] & Over | 2-1/2 [63.5] | 1-1/4 [31.8] | 3-3/8 [85.7] |

General Note: Plunger and interior die surfaces shall be machine-finished.

*Source:* AWS D1.1/D1.1M:2004, Figure 4.17, as adapted from AWS B4.0-98, Figure A3.

**Figure 24C—Alternative Guided-Bend Test Jig—Roller-Equipped Design for Bottom Ejection of Test Specimens**

(2) A retest may be made, provided there is evidence that the welder has had further training or practice. In this case, one complete retest shall be made.

**9.30 Period of Effectiveness.** The welder's qualification, as specified, shall remain in effect indefinitely unless:

(1) The welder is not engaged in a given process of welding for which the welder is qualified for a period exceeding 6 months; or

(2) There is some specific reason to question the welder's ability.

In case (1), the requalification test need be made only in the 3/8 in. [10 mm] thickness.

**9.31 Records.** Records of the test results shall be kept by the Manufacturer or contractor and shall be available to those authorized to examine them.

**9.32 Workmanship Qualification**

**9.32.1 Scope.** The tests described herein are a second method of welder qualification for welders performing operations on secondary stressed components and non-critical weldments. Workmanship samples, as shown in Figures 25(A) and 25(B), or a sample similar to the production welds shall be made.

**9.32.2 Welder Qualification.** Qualification tests are used to determine a welder's ability to produce sound, acceptable welds when welding to the requirements of a qualified procedure specification using a manually-directed welding process. The type and number of samples to be made shall be determined by the Manufacturer to represent the type of work the welder will be doing. The test shall be witnessed, evaluated, and recorded by personnel authorized by the Manufacturer to do so, using visual inspection and appropriate sectioning and etching of each sample. The welds shall meet the requirements of



Copyright American Welding Society
Provided by IHS under license with AWS
No reproduction or networking permitted without license from IHS
Not for Resale

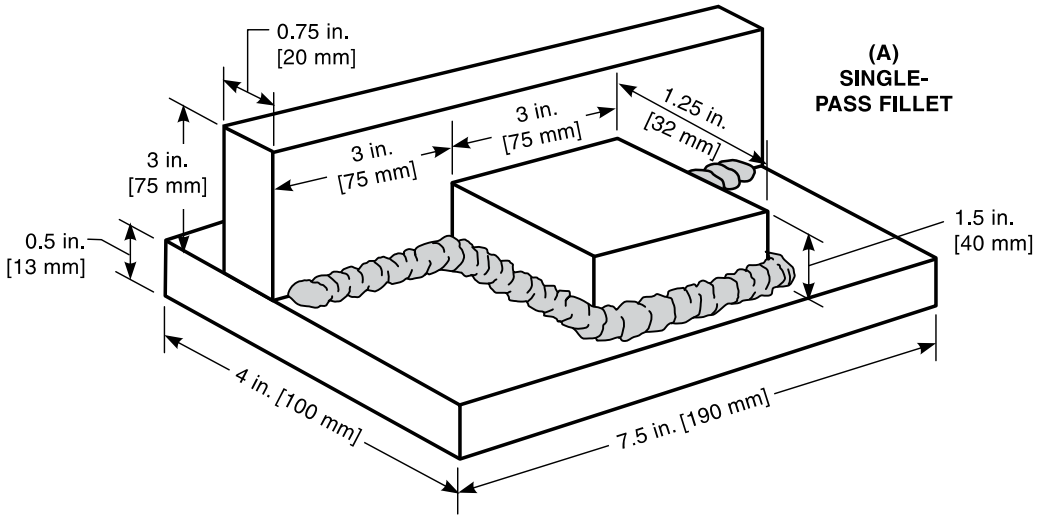


**(A) FILLET WELD SIZE IS LIMITED BY THE WELDING PROCESS AND POSITION OF THE TEST**

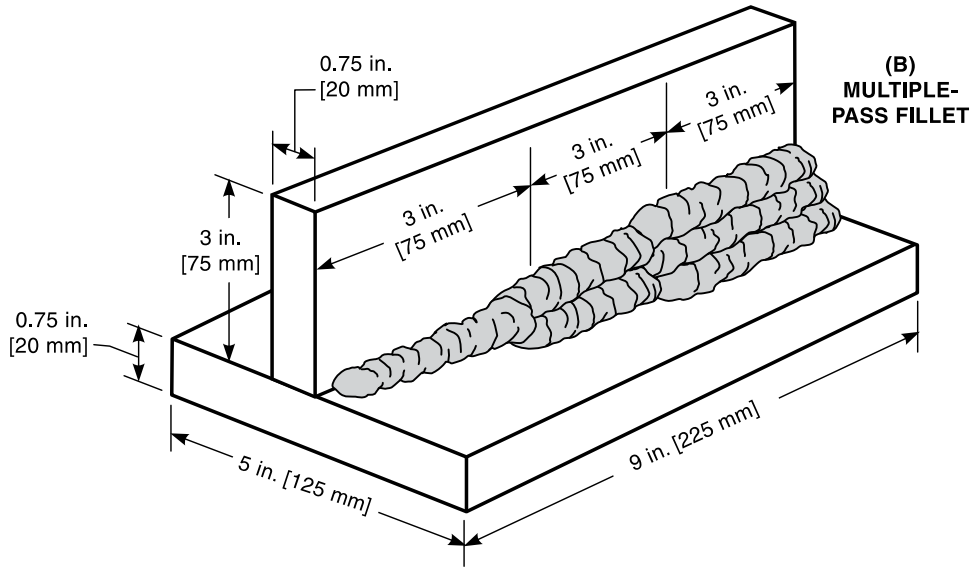


**(B) FILLET WELD SIZE SHOULD BE A MINIMUM OF 0.75 in. [20 mm]. NUMBER OF PASSES REQUIRED IS DETERMINED BY THE WELDING PROCESS, POSITION OF TEST, AND PROCEDURE.**

## Figure 25—Examples of Workmanship Samples



Copyright American Welding Society
Provided by IHS under license with AWS
No reproduction or networking permitted without license from IHS
Not for Resale

Sections 7 (Workmanship) and 10 (Weld Quality and Inspection).

**9.32.3 Production Qualification.** After successful completion of one or more workmanship samples, the capability of the welder to satisfactorily perform production welding will be determined after a tryout at the job station. Qualification shall be achieved when the welder produces a typical production part that meets the quality requirements of this specification, as witnessed and recorded by personnel authorized by the Manufacturer to do so.

**9.32.4 Sample Examination.** Methods of examining samples shall be visual, sectioning and etching, and physical measurement.

**9.32.4.1 Visual Examination.** To pass the visual examination, the weld shall meet the requirements of Section 7 (Workmanship) and Section 10 (Weld Quality and Inspection).

**9.32.4.2 Macroetch Examination.** The specimen cross section shall be smoothed, etched, and examined for discontinuities. The sample shall meet the applicable requirements in other sections of this specification. The weld shall show complete fusion to the root, but not necessarily beyond. Convexity and concavity of the weld shall not exceed the limits specified in Sections 7 and 10.

**9.32.4.3 Physical Measurement Examination.** Welds shall be measured to ascertain that they meet the size tolerances specified in Sections 7 and 10.

**9.32.5 Retests.** In case one or more test welds fail to meet the requirements of 9.32.4, the welder may be retested under the following conditions:

(1) An immediate retest may be made that shall consist of two test welds of each type that failed. Both test specimens shall meet all the requirements specified for such welds.

(2) A retest may be made, provided there is evidence that the welder has had further training or practice. In this case, one complete retest shall be made.

**9.32.6 Period of Effectiveness.** Welder qualification verified by workmanship samples shall remain in effect indefinitely unless:

(1) The welder does not use a welding process for which the welder is qualified for a period exceeding six months; or

(2) There is some specific reason to question the welder's ability.

In case (1), the requalification test need be made only with 3/8 in. [10 mm] thick material.

**9.32.7 Records.** Records of the test results shall be kept by the Manufacturer and shall be available to those authorized to examine them (see suggested sample form in Annex A).

## *Part D*
## *Welding Operator Qualification*

**9.33 General.** The qualification tests described in this section are specially devised to determine a welding operator's ability to produce sound welds. The tests are not intended to be used as a guide for welding during actual construction. The latter shall be performed in accordance with the requirements of the procedure specification. For an alternate method of qualification, see 9.32.

**9.34 Limitations.** For the qualification of a welding operator, the following rules shall apply:

(1) Qualification established with any one of the steels permitted by this specification shall be considered as qualification to weld any of the other steels.

(2) A welding operator qualified with an approved electrode-shielding medium combination shall be considered qualified to weld with any other approved electrode-shielding medium combination for the process used in the qualification test.

(3) A welding operator qualified to weld with multiple electrodes or welding heads shall be qualified to weld with a single electrode, but not vice versa. This does not apply to electrogas and electroslag welding.

(4) An electroslag or electrogas welding operator qualified with an approved electrode-shielding medium combination shall be considered qualified to weld with any other approved electrode-shielding medium combination for the process used in the qualification test.

(5) A change in the position in which welding is done shall require qualification in the new position (see 9.35.3).

### 9.35 Qualification Tests Required

**9.35.1** The welding operator qualification test, for other than electroslag or electrogas welding, shall have the following joint detail: 1 in. [25 mm] plate, single-V-groove, 20° groove angle, and 5/8 in. [16 mm] root opening with backing (see Figure 26). Backing shall be at least 3/8 in. [10 mm] × 3 in. [75 mm] if radiographic testing is used without prior removal of backing. It shall be at least 3/8 in. [10 mm] × 2 in. [50 mm] for mechanical and ultrasonic testing and for radiographic testing after the backing is removed. Minimum length of the welding groove shall be 15 in. [375 mm]. This test will qualify the welding operator for groove and fillet welding in



Copyright American Welding Society
Provided by IHS under license with AWS
No reproduction or networking permitted without license from IHS
Not for Resale

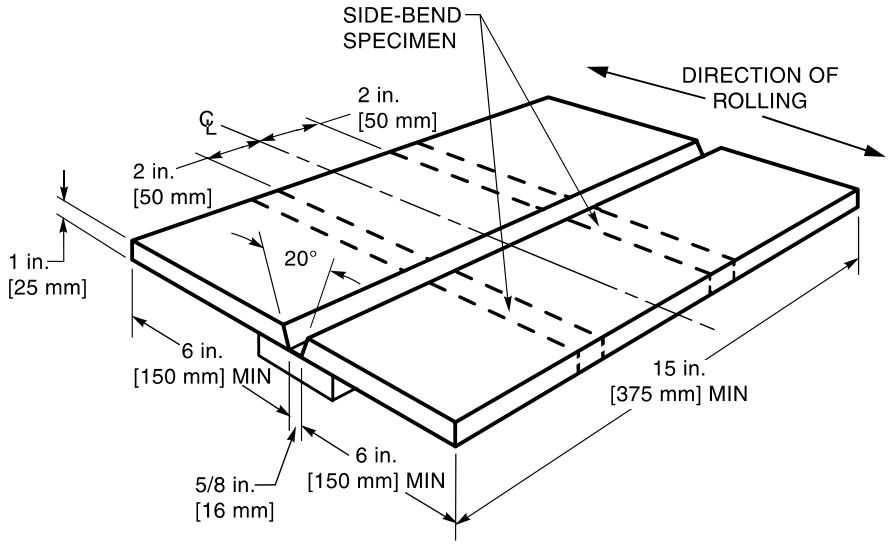


General Notes:
1. When radiography is used for testing, no tack welds shall be in test area.
2. The joint configuration of a qualified groove weld procedure may be used in lieu of the groove configuration shown here.

**Figure 26—Test Plate for Unlimited Thickness—Welding Operator Qualification**

materials of unlimited thickness if the test results are satisfactory.

**9.35.2** An electroslag or electrogas welding operator shall be tested by welding a joint in material of the maximum thickness to be used in construction, except that the material thickness for the test weld need not exceed 1-1/2 in. [40 mm] (see Figure 27). If a 1-1/2 in. [40 mm] thick test weld is made, tests need not be made for thinner sections. This test shall qualify the welding operator for groove welds in material of unlimited thickness if the test results are satisfactory.

**9.35.3** The welding operator who makes a complete joint penetration groove weld procedure qualification test that meets the test requirements is qualified for that process and test position for plate of the same thickness as the welded test plate. If the test plate is 1-1/2 in. [40 mm] or over in thickness and welded by electroslag or electrogas welding, or 1 in. [25 mm] or over and welded by any other processes, the welding operator will be qualified for all thicknesses with the welding process used if the test results are satisfactory.

A welding operator qualified to weld pipe shall also be qualified to weld plate, but not vice versa, except that qualification on plate in the 1G (flat) or 2G (horizontal) position shall qualify the operator for welding pipe or tubing over 24 in. [600 mm] diameter in the position qualified. See Table 17 (Note 2) for additional pipe position qualifications.

**9.35.4** For fillet weld qualification only, the welding operator shall weld a test plate according to Option 1 or Option 2, depending on the contractor's choice, as follows:

(1) Option 1—Weld a T-shaped test plate in accordance with Figure 28.

(2) Option 2—Weld a soundness test plate in accordance with Figure 29.

**9.36 Base Metal.** The base metal used shall comply with Section 4, Base Metals, or the welding procedure specification used for qualification.

### 9.37 Joint Welding Procedure

**9.37.1** The welding operator shall follow the joint welding procedure specified by the welding procedure specification.

**9.37.2** Weld cleaning shall be done with the test weld in the same position as the welding position being qualified.



Copyright American Welding Society
Provided by IHS under license with AWS
No reproduction or networking permitted without license from IHS
Not for Resale

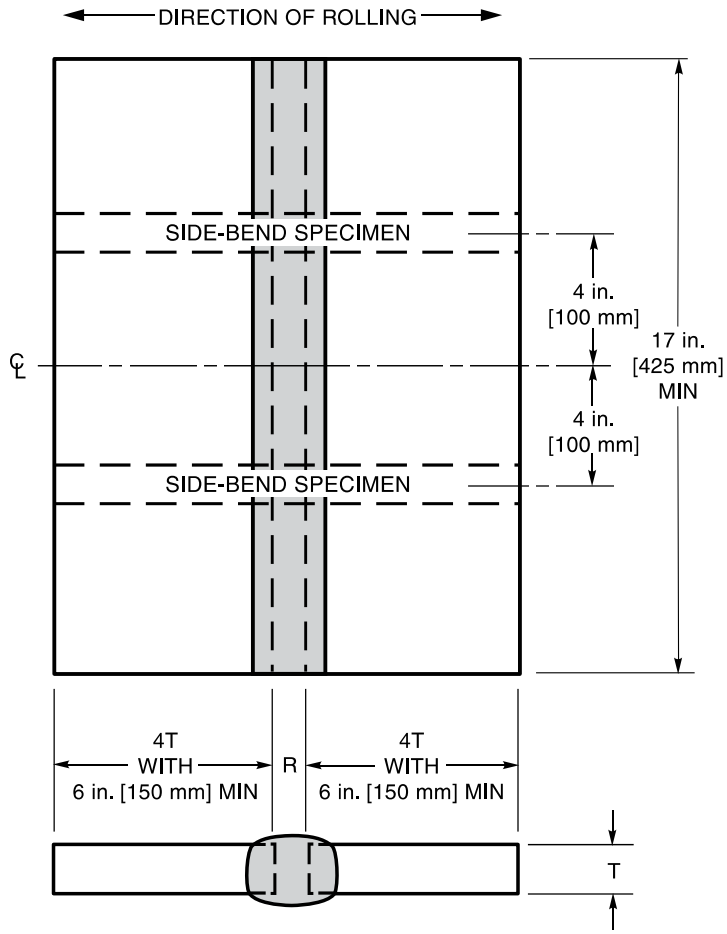


General Notes:
1. Root opening "R" established by procedure qualification.
2. T = maximum to be welded in construction but not to exceed 1-1/2 in. [40 mm].
3. Extensions need not be used if joint is of sufficient length to provide 17 in. [425 mm] of sound weld.

**Figure 27—Butt Joint for Electroslag and Electrogas—Welding Operator Qualification**

### 9.38 Test Specimens

**9.38.1** Guided bend test specimens for mechanical testing shall be prepared by cutting the test plate as shown in Figure 26, 27, or 29, whichever is applicable, to form specimens approximately rectangular in cross section. The specimens shall be prepared for testing in conformance to Figures 15A through 15D, as applicable.

**9.38.2** At the Manufacturer's option, radiographic testing of the weld may be performed in lieu of the guided bend test. In that event, the weld reinforcement need not be ground or otherwise smoothed for inspection, unless surface irregularities or juncture with the base metal would cause objectionable weld discontinuities to be obscured during the radiographic inspection. If the backing is removed for radiographic testing, the root shall be ground flush with the base metal (see 10.7.3).

**9.38.3** The fillet weld break and macroetch test specimens shall be cut from the test joint as shown in Figure 28. The exposed section of the macroetch test specimen shall be finished smooth for etching.

### 9.39 Method of Testing Specimens

**9.39.1 Root- or Side-Bend Specimens.** Each specimen shall be bent in a guided bend test jig that meets the



Copyright American Welding Society
Provided by IHS under license with AWS
No reproduction or networking permitted without license from IHS
Not for Resale

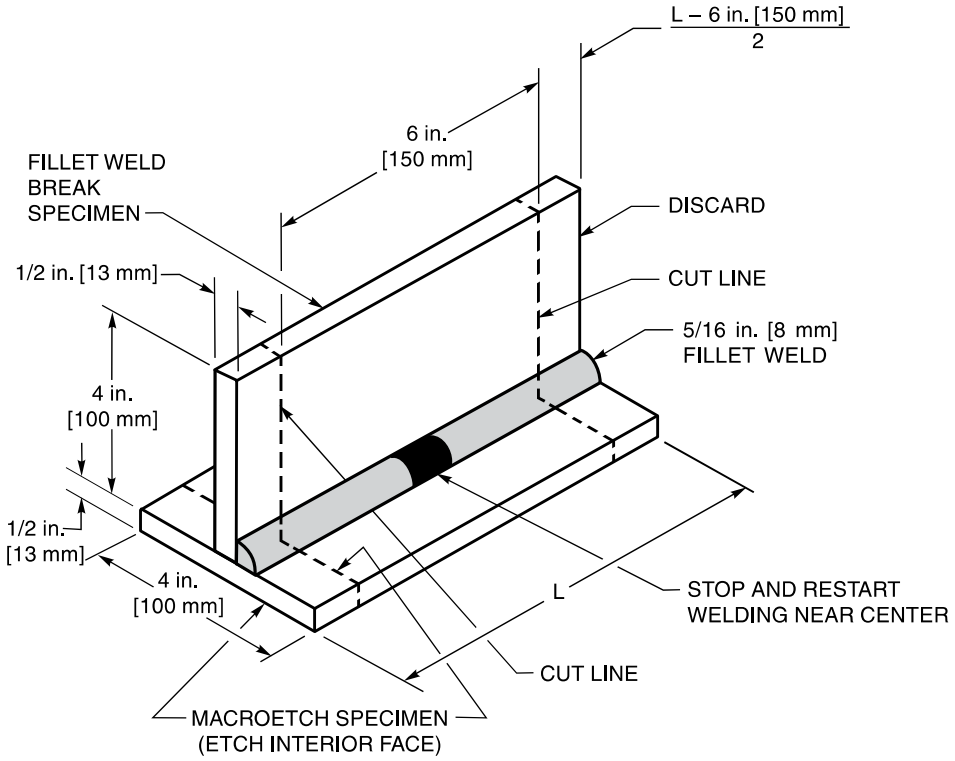


General Notes:
1. L = 15 in. [375 mm] minimum.
2. Plate thickness and dimensions are minimum.

**Figure 28—Fillet Weld Break and Macroetch Test Plate—Welding Operator Qualification, Option 1**

requirements shown in Figure 24A, 24B, or 24C, or is substantially in accordance with those figures, provided the maximum bend radius is not exceeded. Any convenient means may be used to move the plunger member (if used) with relation to the die member.

**9.39.1.1** Root-bend specimens shall be oriented so that the root of the weld will be in tension. Side-bend specimens shall be oriented so that the side showing the larger discontinuity, if any, will be in tension.

**9.39.1.2** The specimen shall be forced into the die or wrapped around member "A" of the wraparound jig until it assumes a U-shape. The weld and heat-affected zones shall be centered and completely within the bent portion of the specimen after testing.

**9.39.1.3** When using a wraparound jig, the specimen shall be firmly clamped on one end so that it does not slide during the bending operation. The weld and heat-affected zones shall be completely in the bent portion of the specimen after testing. Test specimens are to be removed from the jig after the bending roller has been moved 180° from the starting point.

**9.39.2** Radiographic procedure and technique shall be in accordance with the requirements of Section 10, Weld Quality and Inspection. Only the center 50% of the test weld shall be subject to testing.

**9.39.3 Fillet Weld Break Test.** The entire length of the fillet weld shall be examined visually, and then a 6 in. [150 mm] long specimen shall be cut from the test sample and loaded in such a way that the root of the weld is in tension. The load shall be steadily increased or repeated until the specimen fractures or bends flat upon itself.

**9.39.4 Macroetch Test.** The test specimens shall be prepared with a finish suitable for macroetch examination. A suitable solution (such as hot ammonium persulfate) shall be used to give a clear definition of the weld area.



Copyright American Welding Society
Provided by IHS under license with AWS
No reproduction or networking permitted without license from IHS
Not for Resale

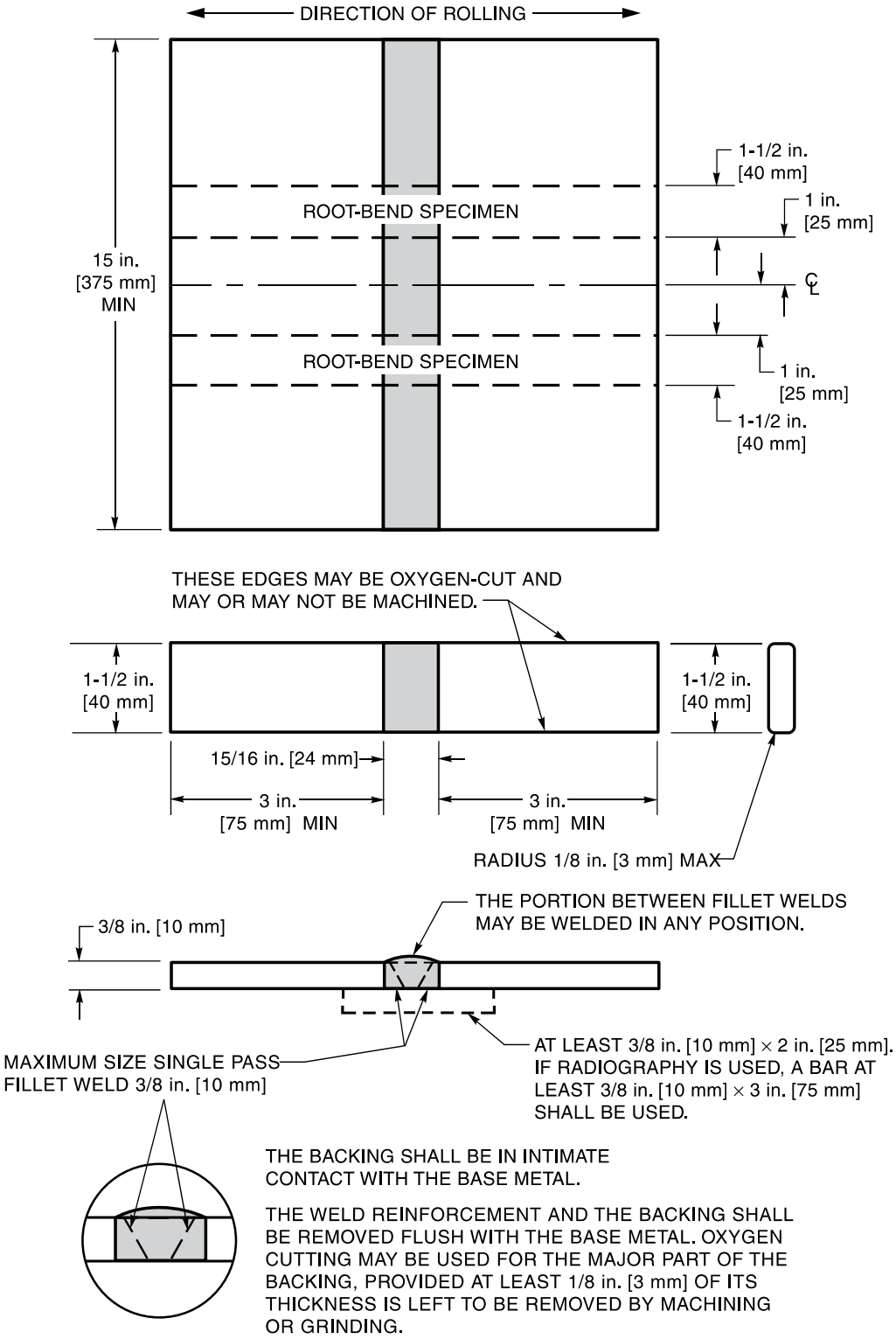


**Figure 29—Fillet Weld Root-Bend Test Plate—Welding Operator Qualification, Option 2**



Copyright American Welding Society
Provided by IHS under license with AWS
No reproduction or networking permitted without license from IHS
Not for Resale

**9.40 Test Results Required**

**9.40.1 Root- and Side-Bend Test.** The convex surface of the specimen shall be examined for the appearance of cracks or other open discontinuities. Any bent specimen containing a crack or other open discontinuity exceeding 1/8 in. [3 mm], measured in any direction, shall be considered as failed. Cracks occurring on the corners of the specimen may be 1/4 in. [6 mm] maximum length, provided there is no evidence of slag inclusions or other fusion-type discontinuities.

**9.40.2** Welds examined by radiographic examination shall conform to the requirements of Section 10, Weld Quality and Inspection.

**9.40.3 Fillet Weld Break Test**

**9.40.3.1** To pass the visual examination, the fillet weld shall present a reasonably uniform appearance and shall be free of overlap, cracks, and excessive undercut. There shall be no porosity visible on the face of the weld.

**9.40.3.2** The specimen passes the test if it bends flat upon itself. If the fillet weld fractures, the fractured surface shall show complete fusion to the root of the joint, and shall exhibit no inclusion or porosity larger than 3/32 in. [2.5 mm] in the greatest dimension. The sum of the greatest dimensions of all inclusions and porosity shall not exceed 3/8 in. [10 mm] in the 6 in. [150 mm] long specimen.

**9.40.4 Macroetch Test.** The test specimen shall be examined for discontinuities. If any discontinuities prohibited by 10.6 are found on the surface, the specimen shall be considered to have failed. The weld shall show complete fusion to the root, but not necessarily beyond, and both legs shall be equal within 1/8 in. [3 mm]. Convexity shall not exceed the limits specified in 10.7.

**9.40.5 Visual Inspection.** For acceptable qualification, the welded test plate, when inspected visually, shall conform to the requirements for visual inspection in Section 10, Weld Quality and Inspection.

**9.41 Retests.** If one or more test welds made by a welding operator fail to meet the requirements, a retest may be allowed under the following conditions:

(1) An immediate retest may be made consisting of two test welds of each type on which the welding operator failed. The retest specimens shall meet all the requirements specified for such welds.

(2) A retest may be made, provided there is evidence that the welding operator has had further training or practice. In this case, one complete retest shall be made.

**9.42 Period of Effectiveness.** The welding operator's qualification specified in this section shall remain in effect indefinitely unless:

(1) The welding operator is not engaged in a given process of welding for which the operator is qualified for a period exceeding 6 months; or

(2) There is some specific reason to question the welding operator's ability.

**9.43 Records.** Records of the test results shall be kept by the Manufacturer and shall be available to those authorized to examine them (see suggested sample form in Annex A).

## *Part E*
## *Qualification of Tack Welders*

**9.44 General.** The qualification tests described in this section are specifically devised to determine a tack welder's ability to produce sound tack welds. The qualification tests are not intended to be used as a guide for tack welding during actual construction. The latter shall be performed in accordance with the requirements of the welding procedure specification. For an alternate method of qualification, see 9.32.

**9.45 Limitations.** For the qualification of a tack welder, the following rules apply:

**9.45.1** Qualification established with any one of the steels permitted by this specification shall qualify the tack welder to tack weld any of the other steels.

**9.45.2** Qualification of a tack welder for SMAW with an electrode identified in Table 16 shall qualify the tack welder to tack weld with any other electrode in the same group designation and with any electrode listed in a numerically lower group designation.

**9.45.3** Qualification of a tack welder with an approved electrode-shielding medium combination shall qualify the tack welder to tack weld with any other approved electrode-shielding medium combination for the process used in the qualification test.

**9.45.4** A tack welder shall be qualified for each process used.

**9.45.5** A change in the position in which tack welding is done, as defined in 9.8, shall require qualification in the new position.

**9.46 Qualification Tests Required.** A tack welder shall be qualified by making one test specimen in each position in which he or she will tack weld on the job.

**9.47 Base Metal.** The base metal used shall comply with the welding procedure specification.



Copyright American Welding Society
Provided by IHS under license with AWS
No reproduction or networking permitted without license from IHS
Not for Resale

**9.48 Test Specimen.** The tack welder shall make a tack weld of 1/4 in. [6 mm] maximum size and approximately 2 in. [50 mm] long on a fillet weld break specimen, shown in Figure 30.

**9.49 Method of Testing.** A force shall be applied to the specimen, as shown in Figure 31, until rupture occurs. The force may be applied by any convenient means. The surface of the weld prior to testing and the fracture surface shall be examined visually for discontinuities.

**9.50 Test Results Required**

**9.50.1** A qualification tack weld shall have a reasonably uniform appearance and be free of overlap, cracks, and excessive undercut. There shall be no visible porosity on the surface of the tack weld.

**9.50.2** The fractured surface of the tack weld shall show complete fusion to the root, but not necessarily beyond, and complete fusion to the base metal. Any inclusion or porosity larger than 3/32 in. [2.5 mm] in greatest dimension is unacceptable.

**9.50.3** A tack welder who passes the fillet weld break test shall be eligible to tack weld all types of joints in the position and with the welding process used for qualification.

**9.51 Retests.** In case of failure to pass the qualification test, the tack welder may make one retest without additional training.

**9.52 Period of Effectiveness.** A tack welder who passes the qualification test shall be eligible to perform tack welding indefinitely in the positions and with the processes used for qualification unless there is some specific reason to question the tack welder's ability. In such cases, the tack welder shall be required to demonstrate the ability to make sound tack welds by again passing the prescribed welding test.

**9.53 Records.** Records of the test results shall be kept by the Manufacturer or contractor and shall be available to those authorized to examine them (see suggested sample form in Annex A).

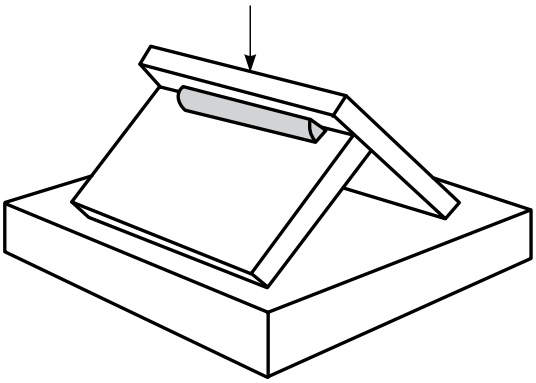

**Figure 31—Method of Fracturing Fillet Weld Break Specimen—Tack Welder Qualification**

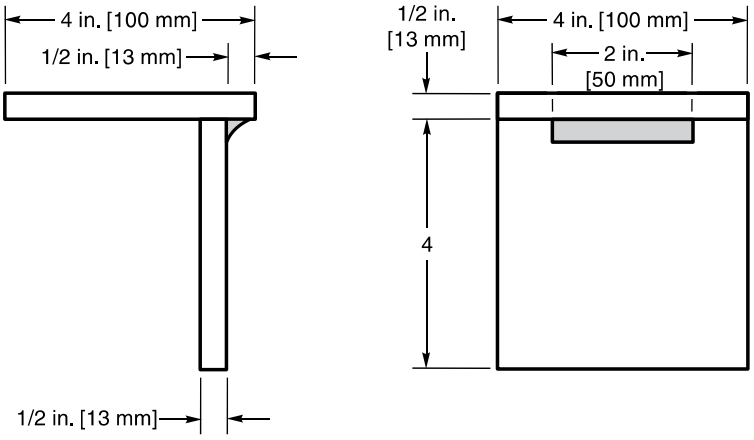


**Figure 30—Fillet Weld Break Specimen—Tack Welder Qualification**



Copyright American Welding Society
Provided by IHS under license with AWS
No reproduction or networking permitted without license from IHS
Not for Resale

# 10. Weld Quality and Inspection

## 10.1 General

**10.1.1** Inspection personnel shall perform tests as necessary prior to, during, and after assembly and welding to ensure that materials and workmanship meet the requirements of this specification.

**10.1.2** Personnel performing nondestructive examination other than visual shall be qualified in accordance with the American Society for Nondestructive Testing *Recommended Practice No*. SNT-TC-1A. Only individuals qualified for NDT Level I, and working under the NDT Level II, or individuals qualified for NDT Level II, may perform nondestructive examination. Certification of Level I and Level II individuals shall be performed by a Level III individual who has been certified by (1) The American Society for Nondestructive Testing, or (2) has the education, training, experience, and has successfully passed the written examination prescribed in SNT-TC-1A.

**10.1.3** Inspectors responsible for acceptance or rejection of material and workmanship shall be qualified. The basis of inspector qualification shall be documented. If the Engineer elects to specify the basis of inspector qualification, it shall be so stated in contract documents. The following are acceptable qualification bases:

(1) Current certification as an AWS Senior Certified Welding Inspector (SCWI) or AWS Certified Welding Inspector (CWI) in conformance to the provisions of AWS QC1, *Standard for AWS Certification of Welding Inspectors,* or

(2) Current certification by the Canadian Welding Bureau (CWB) to the requirements of the Canadian Standard Association (CSA) Standard W178.2, *Certification of Welding Inspectors,* or

(3) An Engineer or technician who, by training or experience, or both, in metals fabrication, inspection, and testing, is competent to perform inspection of the work.

## 10.2 Owner's Representative

**10.2.1** A representative designated by the Owner, when required by the contract, shall verify that all fabrication by welding is performed in conformance to the requirements of this specification. At their discretion, Owners, or their representatives, may waive verification of welding and fabrication inspection.

**10.2.2** The representative shall be furnished with or have access to a complete set of detailed drawings showing the size, length, type, and location of all welds that are to be made.

**10.2.3** The representative shall be notified in advance of the start of any welding operations, when required by the contract.

**10.2.4** The representative shall not delay the normal operating schedule of the Manufacturer if the representative cannot be on site after proper notification, unless otherwise agreed to in the contract.

**10.2.5** The representative shall have the option of performing all, or any part of, the functions set forth in 10.3, 10.4, and 10.5.

**10.2.6** If agreed to in the contract, the representative may keep records of all welder and welding operator qualifications, all procedure qualifications, other tests that are made, and other information that may be required for the execution of duties. Otherwise, this information shall be made available for review at the Manufacturer's facility.

**10.3 Inspection of Welding Procedure Qualifications.** The Owner's representative may witness or review the records of welding and testing of any procedure qualifications that are required in this specification.

**10.4 Inspection of Welder, Tack Welder, and Welding Operator Qualifications.** The Owner's representative shall only permit welding to be performed by welders, tack welders, and welding operators who are qualified in advance in accordance with the requirements of this specification. If retesting or qualification is required, the purchasing representative may witness the welding and testing of the qualification test for each welder, tack welder, or welding operator. Otherwise, the purchasing representative may review the records of past qualification and testing.

## 10.5 Inspection of Work and Records

**10.5.1** The Owner's representative shall make certain that the size, length, and location of welds conform to the requirements of this specification and to the detailed drawings, and that no specified welds are omitted.

**10.5.2** The Owner's representative shall make certain that only those welding procedures that meet the provisions of this specification are employed.

**10.5.3** The Owner's representative may, at suitable intervals, observe the technique and performance of any welder, welding operator, or tack welder to make certain that the applicable workmanship requirements of Section 7, Workmanship, are being met.

**10.5.4** The Owner's representative may examine the work to make certain that it meets the requirements of the workmanship standards of this specification. Size and contour of the welds shall be measured with suitable gauges. Visual inspection for cracks in welds and base metal and for other defects should be aided by strong light or other devices, such as magnifiers, where they may be helpful.



Copyright American Welding Society
Provided by IHS under license with AWS
No reproduction or networking permitted without license from IHS
Not for Resale

**10.5.5** The Owner's representative should identify all parts or joints that have been inspected and accepted with a distinguishing mark.

**10.6 Visual Examination.** All welds shall be visually examined. Examination shall be performed after removal of foreign debris, including slag. A weld shall be acceptable by visual examination if it meets the specified size on the drawings (see Section 7, Workmanship), and the following conditions are met:

(1) The weld has no cracks.

(2) Complete fusion exists between adjacent layers of weld metal and between weld metal and base metal.

(3) All craters are filled to the full cross section of the weld.

(4) Weld profiles are in accordance with 10.7.

(5) Permissible frequency and size of piping porosity in fillet welds shall be limited as follows:

(a) For primary welds, no more than 1 pore in each 4 in. [100 mm] of length, and no larger in diameter than 3/32 in. [2.5 mm].

(b) For secondary welds, the sum of the diameters of piping porosity shall not exceed 3/8 in. [10 mm] in any linear inch of weld, and shall not exceed 3/4 in. [20 mm] in any 12 in. [300 mm] length of weld.

(6) The actual size of a portion of continuous fillet weld, 3/8 in. [10 mm] or larger, can be under the nominal required fillet weld size by 1/16 in. [2 mm] without correction, provided that the undersize portion does not exceed 10% of the weld length. On web-to-flange fillet welds on girders, no undersize weld is permitted at the end of the joint in a length equal to twice the width of the flange.

(7) Primary groove welds shall have no piping porosity. Secondary groove welds shall meet the porosity requirements for fillet welds in 10.6(5)(a).

(8) Visual inspection of welds in all steels may begin immediately after the completed welds have cooled to ambient temperature. Acceptance criteria for ASTM A 514, A 517, and A 709 grades 100 and 100W steels shall be based on visual inspection performed not less than 48 hours after completion of the weld.

### 10.7 Welding Profiles

**10.7.1** The faces of fillet welds may be slightly convex, flat, or slightly concave, as shown in Figures 32(A), 32(B), and 32(C), but with none of the unacceptable profiles shown in 32(D). Except at outside corner joints, the convexity C shall not exceed the sum of 0.1S + 0.03 in. [0.8 mm], where S is the actual size of the fillet weld in inches [millimeters]. See Figures 32(B) and 32(C).

**10.7.2** Groove welds shall be made with slight or minimum reinforcement, except as may be otherwise provided. For butt and corner joints, the reinforcement height, R, shall not exceed 1/8 in. [3 mm] for metal thickness of 2 in. [50 mm] and under, and 3/16 in. [5 mm] for metal thicknesses over 2 in. [50 mm]. It shall have gradual transition to the plane of the base metal's surface, as shown in Figure 32(E). Groove welds shall be free of the discontinuities shown for butt joints in Figure 32(F).

**10.7.3** Where the surface of butt joints are required to be flush, the thickness of the thinner base metal or weld metal shall not be reduced by more than 1/32 in. [1 mm], or 7% of the thickness, whichever is smaller, and weld reinforcement shall not exceed 1/32 in. [1 mm]. However, all reinforcement shall be removed where the weld forms part of a faying or contact surface. Any reinforcement shall blend smoothly into the plate surfaces with transition areas free from undercut. Chipping may be used, provided it is followed by grinding. Where surface finishing is required, the roughness value shall not exceed $250 \times 10^{-6}$ in. [$6 \times 10^{-6}$ m]. Surfaces finished to values of over $125 \times 10^{-6}$ in. [$3 \times 10^{-6}$ m] through $250 \times 10^{-6}$ in. [$6 \times 10^{-6}$ m] shall be finished parallel to the direction of primary stress. Surfaces finished to $125 \times 10^{-6}$ in. [$3 \times 10^{-6}$ m] or less may be finished in any direction. (See ASME B46.1, *Surface Texture*, for measurement method.)

**10.7.4** Undercut depth shall not exceed 1/32 in. [1 mm] or 7% of the base metal thickness, except that Joint Class IV, V, and VI welds with a total undercut of less than 1/2 in. [13 mm] in length in any linear 12 in. [300 mm] of weld are acceptable without measurement of the undercut depth.

**10.7.5** Welds shall be free from overlap.

**10.7.6** Fillet welds may not deviate from designated size by more than the tolerances given in 10.6(6). The convexity shall meet the tolerances given in 10.7.1. If the deviation exceeds these tolerances, the weld shall be corrected as noted in Section 12, Repair and Correction of Defects.

### 10.8 Nondestructive Examination

**10.8.1** Joint Class I and II weld joints shall require either radiographic or ultrasonic examination in addition to magnetic particle or dye penetrant examination. Nondestructive examination (other than visual inspection) of weld joints other than Joint Class I or II, when it is to be required as a part of the contract, shall be announced in the information furnished to bidders. The information provided shall designate the inspection process to be employed, the welds to be examined, and the extent of examination of each weld. Such nondestructive examination shall be conducted in conformance to the require-



Copyright American Welding Society
Provided by IHS under license with AWS
No reproduction or networking permitted without license from IHS
Not for Resale

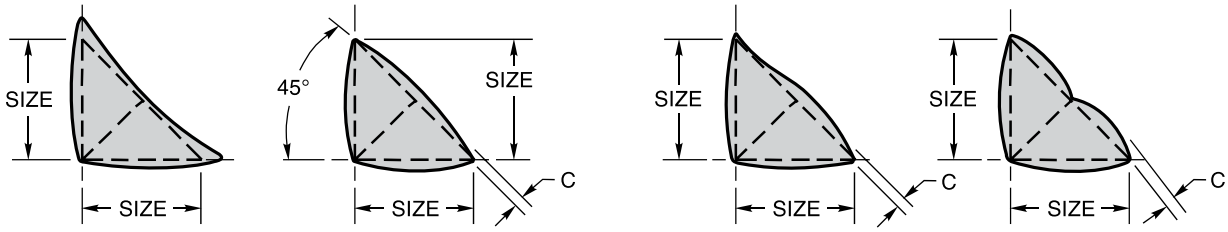


(A) (B)

**DESIRABLE FILLET WELD PROFILES**

FOR LEG SIZE TOLERANCES, SEE 10.6(6).

**(C) ACCEPTABLE FILLET WELD PROFILES**

C = CONVEXITY, SEE 10.7.1.

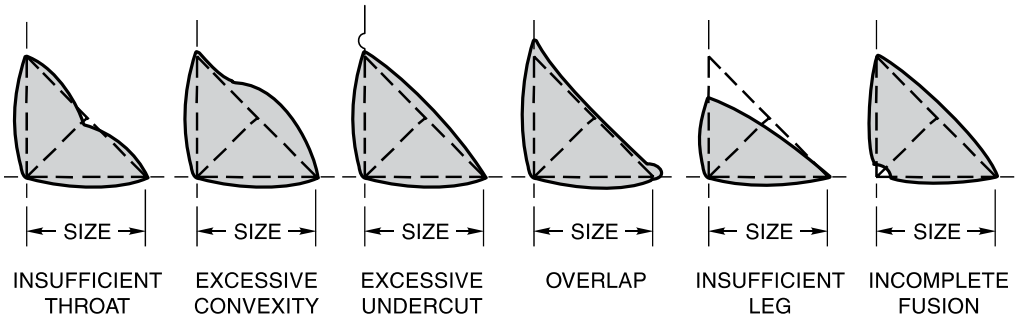


**(D) UNACCEPTABLE FILLET WELD PROFILES**

UNDERCUT SHALL NOT EXCEED 1/32 in. [1 mm] OR A MAX OF 0.07t

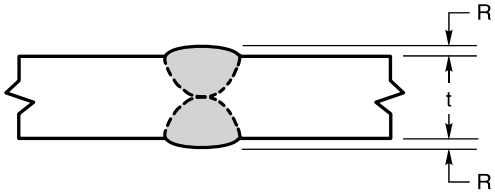


| METAL THICKNESS (t) AND WELD REINFORCEMENT (R) | |
|---|---|
| t, in. [mm] | R, in. [mm] |
| ≤ 2 [50] | 1/8 [3] |
| > 2 [50] | 3/16 [5] |

SEE 10.7

**(E) ACCEPTABLE BUTT JOINT WELD PROFILE**

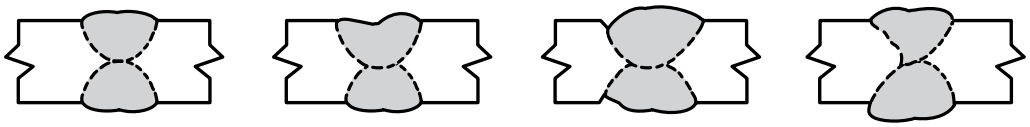

EXCESSIVE CONVEXITY SEE 10.7.1

UNDERFILL SEE 10.7.2

EXCESSIVE UNDERCUT SEE 10.7.3 AND 10.7.4

OVERLAP SEE 10.7.5

**(F) UNACCEPTABLE GROOVE WELD PROFILES IN BUTT JOINTS**

**Figure 32—Acceptable and Unacceptable Weld Profiles**



Copyright American Welding Society
Provided by IHS under license with AWS
No reproduction or networking permitted without license from IHS
Not for Resale

ments of this specification, or as modified by mutual agreement between the Manufacturer and Owner.

For welds subject to nondestructive testing in accordance with 10.8, 10.11, 10.15, 10.16, or 10.17, the testing may begin immediately after the completed welds have cooled to ambient temperature. However, nondestructive testing of ASTM A 514, A 517, and A 709 Grade 100 and 100W steels shall begin not less than 48 hours after the completed welds have cooled to ambient temperature.

Refer to ASTM E 1316, *Standard Terminology for Nondestructive Examinations*, for standard definitions of terms.

**10.8.2** Welds that do not meet the nondestructive examination requirements of this specification shall be repaired by the methods permitted by Section 12, Repair and Correction of Defects.

**10.8.3** Nondestructive examination in this specification is only intended to apply to primary welds, unless otherwise specifically agreed to in the contract between the Manufacturer and the Owner.

**10.8.4** A weld that is to be subjected to nondestructive examination need not be ground or otherwise smoothed, provided surface irregularities or juncture with the base metal do not obscure objectionable weld discontinuities during examination.

### 10.9 Radiographic Examination of Welds

**10.9.1** The procedures and standards set forth in this section are to govern radiographic examination of welds when such testing is required by stipulation of 10.8. These procedures are restricted to inspection of groove welds with complete joint penetration.

**10.9.2** Variations in testing procedure, equipment, and acceptance standards from those given in this section may be used upon agreement with the Owner. Such variations include the radiographic examination of fillet welds, T-welds, or corner welds; changes in source-to-film distance; unusual geometries; unusual penetrameter application, film type, or densities; and film exposure or development variations.

**10.9.3** Information furnished to the bidders shall clearly identify the extent of radiographic testing required.

**10.9.4** Complete testing, when specified, requires that the entire length of weld in each designated joint shall be tested.

**10.9.5** Spot testing, when specified, requires that the number of spots to be radiographed in a stated length of weld in each designated category of weld joint shall be included in information furnished to bidders. Each spot radiograph shall show at least 4 in. [100 mm] of weld length. If a spot radiograph shows discontinuities that require repair, as defined in 10.11, two adjacent spots shall be tested. If discontinuities requiring repair are detected in either of these, the entire length of weld in that joint shall be tested radiographically.

### 10.10 Radiographic Procedure

**10.10.1** Radiographs shall be made by either X-ray or isotope radiation methods. Radiography shall be conducted in accordance with ASTM E 94, *Standard Guide for Radiographic Examination.*

**10.10.2** The radiographic sensitivity shall be judged based on penetrameters. Radiographic technique and equipment shall provide sufficient sensitivity to clearly delineate the required penetrameters and the essential holes as described in 10.10.4 and Table 19. Identifying letters and numbers shall show clearly in the radiograph. *Note: Alternative image quality indicators may be used when approved by the Engineer.*

**10.10.3** Radiographs shall have an H & D density[14] of 2.0 minimum and 4.0 maximum. In addition, the density in the area of interest shall not vary more than minus 15% and plus 30% from the density through the penetrameter.

**10.10.4** One penetrameter, centered on the film, shall be used for film 10 in. [250 mm] or less in length. Two penetrameters, one centered and one at the end of the film, shall be used for radiographs with a film length greater than 10 in. [250 mm] in length. For panoramic exposures, three penetrameters shall be placed 120° apart around the object being radiographed. Penetrameters shall be placed on the source side whenever possible. Failure to prove adequate sensitivity on all three penetrameters shall disqualify the exposure, and the entire technique shall be repeated.

**10.10.5** Radiographs shall be made using a single source of radiation approximately centered with respect to the length and width of the area being examined. The minimum source-to-object distance shall be the greater of the film length or 7 times the maximum thickness of the weld being examined. For panoramic exposures, the minimum source-to-object distance shall be 7 times the maximum weld thickness. During exposure, the film shall be as close as possible to the opposite side of the weld being examined. Edge blocks shall be used when radiographing butt joints greater than 1/2 in. [13 mm]

14. H & D density, D, is a measure of film blackening expressed as $D = \log (I_o/I)$, where:

$I_o$ = light intensity on the film

$I$ = light transmitted through the film



Copyright American Welding Society
Provided by IHS under license with AWS
No reproduction or networking permitted without license from IHS
Not for Resale

**Table 19**
**Penetrameter Requirements (see 10.10.2)**

| Nominal Material Thickness Range(1) | | Source Side | | Film Side(2) | |
|---|---|---|---|---|---|
| in. | mm | Designation | Essential Hole | Designation | Essential Hole |
| Up to 0.25 incl. | Up to 6 incl. | 10 | 4T | 7 | 4T |
| Over 0.25 through 0.375 | Over 6 to 10 | 12 | 4T | 10 | 4T |
| Over 0.375 through 0.625 | Over 10 to 16 | 15 | 4T | 12 | 4T |
| Over 0.625 through 0.75 | Over 16 to 19 | 17 | 4T | 15 | 4T |
| Over 0.75 through 1.00 | Over 19 to 25 | 20 | 4T | 17 | 4T |
| Over 1.00 through 1.25 | Over 25 to 32 | 25 | 4T | 20 | 4T |
| Over 1.25 through 1.50 | Over 32 to 40 | 30 | 2T | 25 | 2T |
| Over 1.50 through 2.00 | Over 40 to 50 | 35 | 2T | 30 | 2T |
| Over 2.00 through 2.50 | Over 50 to 65 | 40 | 2T | 35 | 2T |
| Over 2.50 through 3.00 | Over 65 to 75 | 45 | 2T | 40 | 2T |
| Over 3.00 through 4.00 | Over 75 to 100 | 50 | 2T | 45 | 2T |
| Over 4.00 through 6.00 | Over 100 to 150 | 60 | 2T | 50 | 2T |
| Over 6.00 through 8.00 | Over 150 to 200 | 80 | 2T | 60 | 2T |

Notes:
(1) Single wall radiographic thickness (for tubulars).
(2) Applicable to tubular structures only.

thick. The minimum width of the edge blocks shall be 1 in. [25 mm] or half the weld thickness, whichever is greater. The edge blocks shall have a thickness equal to or greater than the thickness of the weld being radiographed.

**10.10.6** All radiographs shall be free from chemical and mechanical blemishes that could mask discontinuities in the area of interest. Such blemishes include, but are not limited to, finger prints, crimps, screen marks, water marks, streaks, chemical stains, and fogging. Film identification shall be made permanent on the film by radiographic image, lead tape, flash type ID, or other approved means.

### 10.11 Acceptability of Radiographed Welds

**10.11.1** Welds subject to radiographic examination shall first be visually examined in conformance to the requirements of 10.6 and 10.7.

**10.11.2** The greatest dimension of any porosity or fusion-type discontinuity indications that are 1/16 in. [2 mm] or larger shall not exceed the size, B, indicated in Figure 33 for the effective throat of a groove weld or weld size of a fillet weld. The distance from any indication of porosity or fusion-type discontinuity to another such indication, to an edge, or to any intersecting weld shall not be less than the minimum clearance allowed, C, indicated in Figure 33 for the size of discontinuity under examination. Annex B illustrates the application of the requirements given in 10.11.2.

**10.11.3** Discontinuities meeting requirements of 10.11.1 and having a greatest dimension of less than 1/16 in. [2 mm] are nevertheless not acceptable if the sum of their greatest dimensions exceeds 3/8 in. [10 mm] in any linear inch [25 mm] of weld.

**10.11.4** The limitations for 1-1/2 in. [40 mm] groove weld effective throat given in Figure 33 shall apply to all welds with larger effective throats.

**10.11.5** A recommended form for reporting the results of radiographic examination is shown in Annex A.

### 10.12 Examination, Report, and Disposition of Radiographs

**10.12.1** The contractor shall provide a suitable high-intensity viewer with sufficient capacity to illuminate radiographs with a density of 4.0 without difficulty. It is recommended that at least a two-level or variable-intensity illuminator be used.

**10.12.2** All radiographs of welds that are subject to contractual radiographic examination by the Manufacturer, including those that show unacceptable quality prior to repair, and a report interpreting them, shall be available for review by the Owner's representative before the weld is accepted.

**10.12.3** A full set of radiographs for welds subject to radiographic examination by the Manufacturer for the Owner, including those that show unacceptable quality prior to repair, shall be delivered to the Owner upon



Copyright American Welding Society
Provided by IHS under license with AWS
No reproduction or networking permitted without license from IHS
Not for Resale

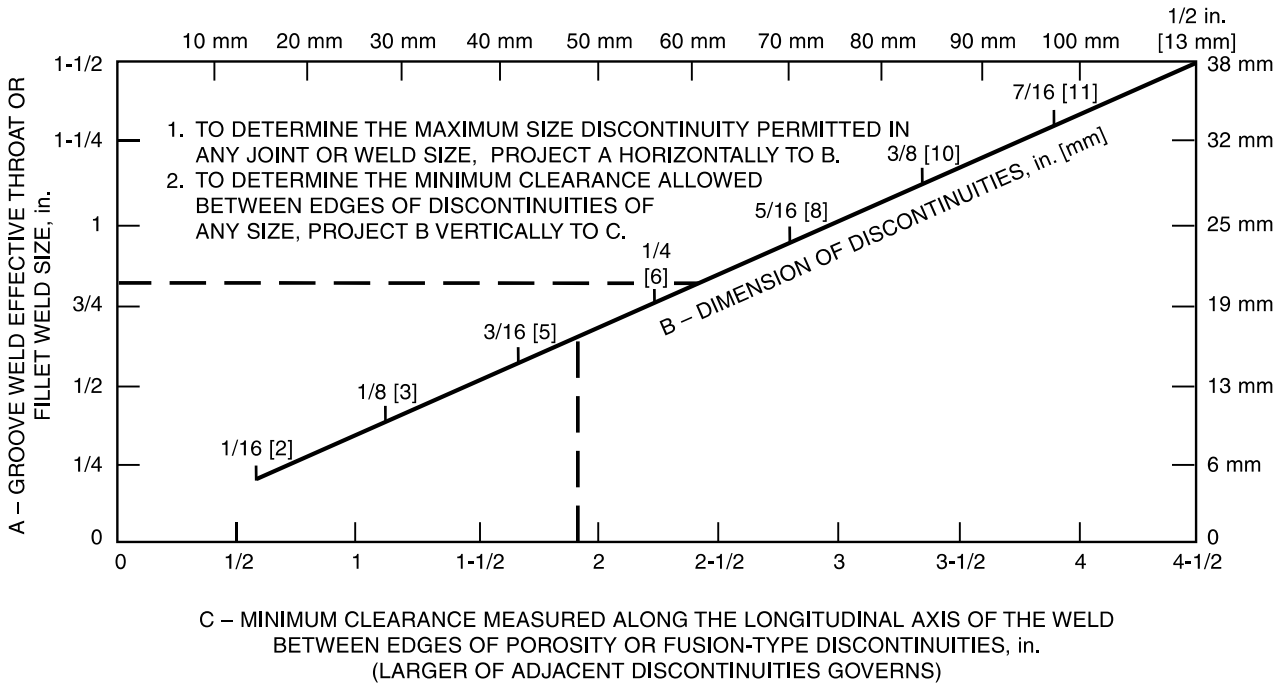


General Note: Adjacent discontinuities, spaced less than the minimum required clearance shall be measured as one length equal to the sum of the total length of the discontinuities plus the length of the space between them and evaluated as a single discontinuity.

**Figure 33—Weld Quality Requirements for Discontinuities Occurring in Welds (Limitation of Porosity and Fusion—Type Discontinuities)**

completion of the work. The Manufacturer's obligation to retain radiographs shall cease (1) upon delivery of this full set to the Owner, (2) one full year after completion of the Manufacturer's work, in the event that delivery is not required, or (3) as otherwise stated in the contract.

### 10.13 Ultrasonic Examination of Welds

**10.13.1** The procedures and standards set forth in this section govern the ultrasonic examination of groove welds between the thicknesses of 5/16 in. [8 mm] and 8 in. [200 mm] inclusive, when such testing is required by 10.8 of this specification. These procedures and standards are not to be used as a basis for rejection of the base metal.

**10.13.2** Variations in testing procedure, equipment, and acceptance standards not included in this section may be used by agreement between the Manufacturer and Owner. Such variations include other thicknesses, weld geometries, transducer sizes, frequencies, and couplants.

**10.13.3** Spot radiography is suggested to supplement ultrasonic testing of electroslag and electrogas groove welds in material 2 in. [50 mm] and over in thickness to detect possible piping porosity.

**10.13.4** Information furnished to bidders shall clearly identify the extent of ultrasonic testing required.

**10.13.5** Complete testing, when specified, requires testing of the entire length of the weld in each designated joint.

**10.13.6** Spot testing, when specified, requires that the number of spots in each designated category of weld, or the number required to be made in a stated length of weld, be included in the information furnished to bidders. When spot testing reveals discontinuities that require repair, two adjacent spots shall be tested. If discontinuities requiring repair are revealed in either of these, the entire length of the weld in that joint shall be tested ultrasonically.



Copyright American Welding Society
Provided by IHS under license with AWS
No reproduction or networking permitted without license from IHS
Not for Resale

### 10.14 Ultrasonic Testing Equipment and Calibration

**10.14.1** The apparatus for ultrasonic examination shall meet the requirements of ASTM E 164, *Recommended Practice for Ultrasonic Contact Examination of Weldments*, and ASTM E 317, *Recommended Practices for Evaluating Performance Characteristics of Pulse-Echo Ultrasonic Testing Systems*. Refer to ASTM E 1316, *Standard Terminology for Nondestructive Examinations*, for standard definitions of terms.

**10.14.2** Test instruments shall include internal stabilization so that, after warm up, no variation in response greater than ±1 dB occurs with supply voltage changes of 15% nominal or, in the case of battery powered instruments, over the battery charge operating life. There shall be an alarm or meter to signal a drop in battery voltage prior to instrument shutoff due to battery exhaustion.

**10.14.3** The test instrument shall have a calibrated gain control (attenuator) adjustable in discrete 1 or 2 dB steps over a range of at least 60 dB.

**10.14.4** The dynamic range of the instrument's display shall be such that a difference of 1 dB of amplitude can be easily detected.

**10.14.5** Each search unit shall be marked to clearly indicate the frequency of the transducer, nominal angle of refraction, and index point.

**10.14.6** Preferred couplants are a cellulose gum-water mixture and glycerine with a wetting agent. Where possible, avoid the use of oil or grease as the couplant for examination of welds. If oil or grease is used as the couplant, the requirements of 7.2.1 shall be met before any repairs are made.

**10.14.7** The horizontal linearity of the test instrument shall be within ±5% over the linear range that includes 90% of the sweep length presented on the display for the longest sound path to be used. The horizontal linearity shall be measured by the techniques prescribed in Section 7.9 of ASTM E 317, except that the results may be tabulated rather than graphically represented. Horizontal linearity shall be checked after each 40 hours of instrument use.

**10.14.8** Internal reflections from the search unit, with a screen presentation higher than the horizontal reference line, appearing on the screen to the right of the sound entry point shall not occur beyond 1/2 in. [13 mm] equivalent distance in steel when the sensitivity is as follows: 20 dB more than that required to produce a maximized horizontal reference-line height indication from the 1/16 in. [1.59 mm] diameter hole in the International Institute of Welding (IIW) reference block (see ASTM E 164).

**10.14.9** The dimensions of the search unit shall be such that the minimal allowable distance, X, between the toe of the search unit and the edge of the IIW block, shall be as follows:

(1) 70° transducer, X = 2 in. [50 mm]
(2) 60° transducer, X = 1-7/16 in. [37 mm]
(3) 45° transducer, X = 1 in. [25 mm]

The search unit shall be positioned for maximum indication from the 1/16 in. [1.59 mm] diameter hole in the IIW calibration block.

**10.14.10 Resolution**

**10.14.10.1** For shear waves, the combination of search unit and instrument shall resolve the appropriate three holes in the resolution test block shown in Figures 34A and 34B. For a 70° angle, the transducer should be set in position Q on the resolution block as shown in Figure 34C. The resolution shall be evaluated with the instrument controls set at normal test settings, and with indications from the holes brought to midscreen height. Resolution shall be sufficient to distinguish at least the peaks of indications from the three holes.

**10.14.10.2** To determine longitudinal wave resolution, the instrument controls shall be at normal settings with indications from the holes brought to midscreen height (see Figure 34C).

(1) Set the transducer in position F on the IIW block.
(2) Transducer and instrument should resolve all three distances.

**10.14.11** The IIW ultrasonic reference block, shown in ASTM E 164, shall be the standard used for both distance and sensitivity calibration. More portable reference blocks of other designs may be used, provided they meet the requirements of this specification and are referenced back to the IIW block. Approved designs are shown in ASTM E 164. See Figure 34C for application.

**10.14.12** Using a corner reflector for calibration purposes is prohibited.

**10.14.13** The gain control (attenuator) of the instrument shall meet the requirements of 10.14.3 and shall be checked for correct calibration at two-month intervals in accordance with a procedure approved by the manufacturer of the instrument.

**10.14.14** With the use of an approved calibration block, each angle-beam search unit shall be checked after each eight hours of use to determine that:

(1) The contact face is flat,
(2) The sound entry point is correct, and
(3) The beam angle is within the permitted ±2° tolerance.

Search units that do not meet these requirements shall be corrected or replaced.



Copyright American Welding Society
Provided by IHS under license with AWS
No reproduction or networking permitted without license from IHS
Not for Resale

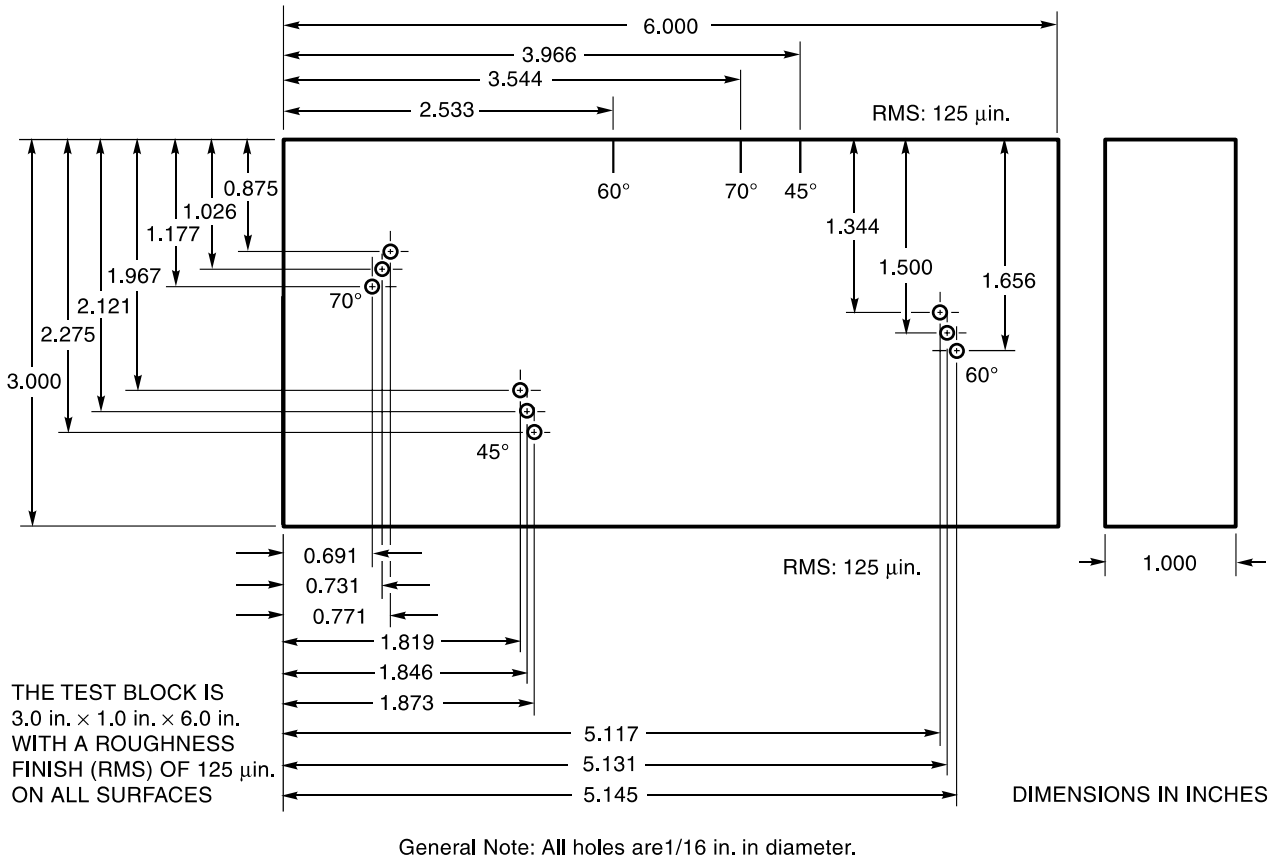


*Source:* Adapted from AWS D1.1/D1.1M:2004, Figure 6.23, p. 248.

**Figure 34A—RC Resolution Reference Block (U.S. Units)**

**10.14.15** Calibration for sensitivity and horizontal sweep (distance) shall be made at the location of testing by the ultrasonic operator just prior to examination of each weld and at intervals of 30 minutes during examination. Recalibration shall be made when:

(1) There is a change of operators,

(2) Transducers are changed,

(3) New batteries are installed, and

(4) Equipment operating from a 110 volt source is connected to a different power outlet.

**10.14.16** Calibration for straight beam testing shall be performed as follows:

(1) The horizontal sweep shall be adjusted for distance calibration to present the equivalent of a least two plate thicknesses on the display.

(a) Set the transducer in position G on the IIW block, position H on the DC block, or position M on the DSC block (see Figure 34C).

(b) Adjust instrument to produce indications at 1 in. [25 mm], 2 in. [50 mm], 3 in. [75 mm], 4 in. [100 mm], etc. on the display.

(2)The sensitivity (gain) shall be adjusted at a location free of indications so that the first back reflection from the far side of the plate will be 50% to 70% of full screen height. For this purpose, the reject (clipping) control shall be turned off.

**10.14.17** Calibration for angle beam testing shall be performed as follows:

(1) The horizontal sweep shall be adjusted to represent the actual sound-path distance by using acceptable distance calibration blocks shown in Figure 34C and ASTM E 164. This distance calibration shall be made using either the 5 in. [125 mm] scale or the 10 in. [250 mm] scale on the display, whichever is appropriate, unless joint configuration or thickness prevents full examination of the weld at either of these settings.



Copyright American Welding Society
Provided by IHS under license with AWS
No reproduction or networking permitted without license from IHS
Not for Resale

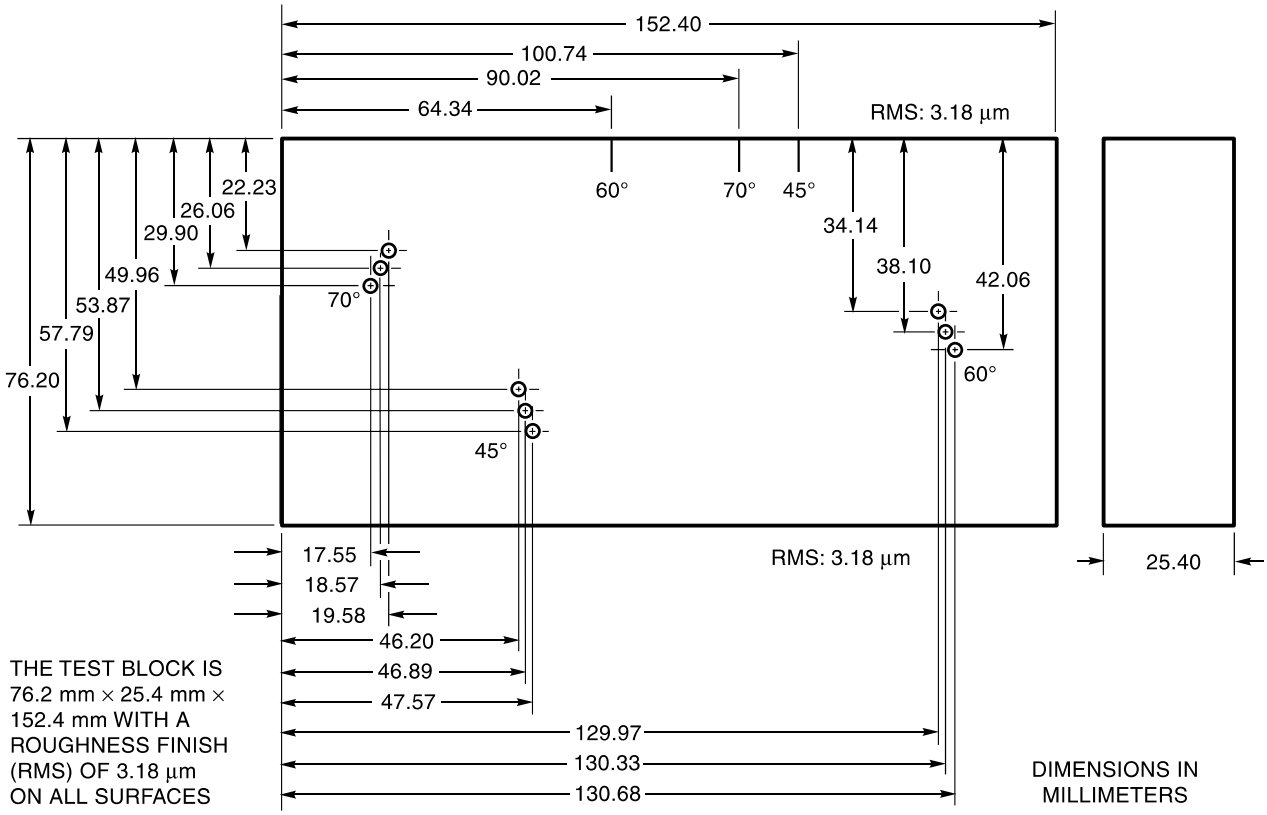


General Note: All holes are1.59 mm in diameter.

*Source:* Adapted from AWS D1.1/D1.1M:2004, Figure 6.23 (Continued), p. 249.

**Figure 34B—RC Resolution Reference Block (SI Units)**

(a) Set the transducer in position D on the IIW block (any angle).

(b) Adjust the instrument to obtain indications on the display at 4 in. [100 mm] and 9 in. [225 mm] from a Type 1 block, or at 4 in. [100 mm] and 8 in. [200 mm] from a Type 2 block.

(c) Set the transducer in position J or L on the DSC block (any angle).

(d) Adjust the instrument to obtain indications on the display at 1 in. [25 mm], 5 in. [125 mm], 9 in. [225 mm] in the J position, or at 3 in. [75 mm], and 7 in. [175 mm] in the L position.

(e) Set the transducer in position I on the DC block (any angle).

(f) Adjust the instrument to obtain indications on the display at 1 in. [25 mm], 2 in. [50 mm], 3 in. [75 mm], 4 in. [100 mm], and so forth.

(2) With the unit adjusted to conform with the requirements of 10.14.1 through 10.14.10, the sensitivity shall be adjusted by the use of the gain control (attenuator) so that a horizontal reference-level trace deflection results on the display with the maximum indication from the 0.060 in. [1.59 mm] diameter hole in the IIW block or from the equivalent reference reflector in other acceptable calibration blocks. This basic sensitivity then becomes the zero reference level for discontinuity evaluation and shall be recorded on the ultrasonic test reports under reference level. See Annex A for a sample ultrasonic test report form.

(a) Set the transducer in position A on the IIW block (any angle).

(b) Adjust the maximized signal from the 0.060 in. [1.59 mm] hole to attain a horizontal reference-line height indication.



Copyright American Welding Society
Provided by IHS under license with AWS
No reproduction or networking permitted without license from IHS
Not for Resale

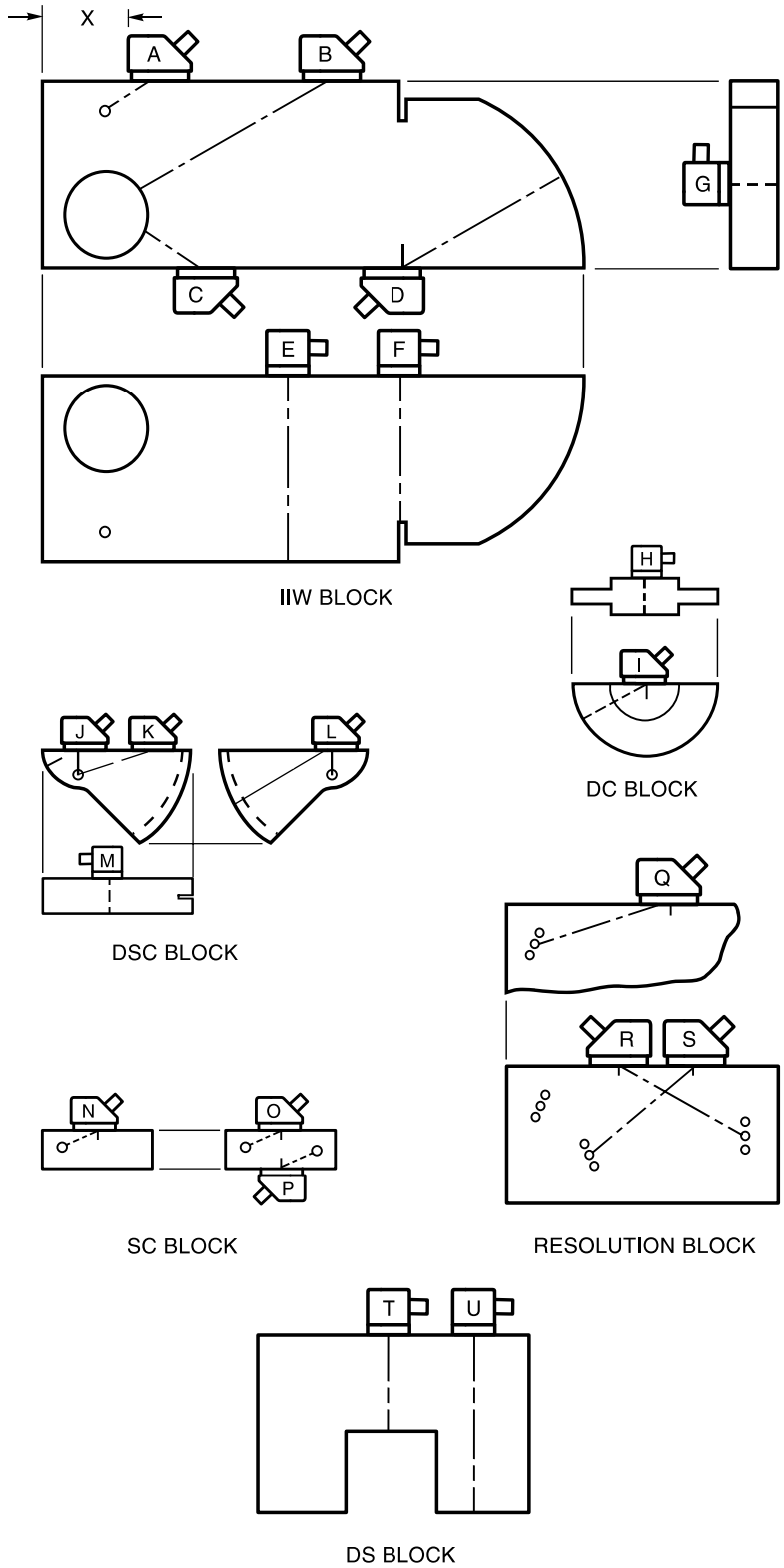


**Figure 34C—Typical Transducer Positions**



Copyright American Welding Society
Provided by IHS under license with AWS
No reproduction or networking permitted without license from IHS
Not for Resale

(c) Set the transducer in position L on the DSC block (any angle).

(d) Adjust the maximized signal from the 1/32 in. [0.8 mm] slot to attain a horizontal reference-line height indication.

(e) Set the transducer on the SC block in position N for 70° angle, position O for 45° angle, or position P for 60° angle.

(f) Adjust the maximized signal from the 0.060 in. [1.59 mm] hole to attain a horizontal reference-line height indication.

(g) The decibel reading obtained in (f) shall be used as the reference level, b, reading on the test report sheet (see Annex A).

### 10.15 Ultrasonic Testing Procedure, Acceptance Criteria, and Reports

**10.15.1** The letter Y accompanied by a weld identification number shall be clearly marked on the base metal adjacent to the weld at the left end of each weld that is ultrasonically examined. This identification number serves as an orientation direction for weld discontinuity location and as the report number on the report form (see Annex A for suggested report form).

**10.15.2** All surfaces to which a search unit is applied shall be free of weld spatter, dirt, grease, oil, (other than that used as a couplant) and loose scale and shall have a contour permitting intimate coupling. Tight layers of paint need not be removed unless their combined thickness exceeds 0.010 in. [0.25 mm].

**10.15.3** A couplant shall be used between the search unit and the metal. The couplant should be either glycerine with a wetting agent, if needed, or a cellulose gum and water mixture of a suitable consistency. Light machine oil, or equivalent, may be used for couplant on calibration blocks.

**10.15.4** The entire base metal through which ultrasonic vibrations must travel to test the weld shall be examined for laminar reflectors, using a straight-beam search unit conforming to the requirements of 10.14. If any area of base metal exhibits total loss of back reflection and is located in a position that would interfere with the normal weld scanning procedure, the following alternate weld scanning procedure shall be used. Alternate weld scanning procedure inspection may also be conducted in accordance with ASTM E 164.

(1) The area of the laminar reflector and its depth from the surface shall be determined and reported on the ultrasonic test report.

(2) If part of a weld is inaccessible to testing in accordance with the requirements of Table 20 because of laminar content recorded in accordance with 10.15.4(1), the testing shall be conducted by using an alternate scanning pattern described in 10.15.5, by first grinding the weld surfaces flush to make total weld areas accessible to ultrasonic testing, or both.

**10.15.5 Alternate Scanning Patterns** (See Figure 35)

(1) *Longitudinal Discontinuities*. Scanning patterns shall consist of the following combined movements:

(a) Scanning movement A—Rotation angle, a, equals 10°.

(b) Scanning movement B—Scanning distance, b, shall be sufficient to ensure that the section of weld being examined is covered.

(c) Scanning movement C—Progression distance, c, shall be approximately one-half of the transducer width.

(2) *Transverse Discontinuities*

(a) Scanning pattern D—when welds are ground flush.

(b) Scanning pattern E—when weld is not ground flush.

(c) Scanning angle e = 15° maximum.

(d) Scanning pattern shall ensure the full weld section is covered.

(3) *Electroslag or Electrogas Welds*. (Additional scanning pattern)—scanning pattern E

(a) Search unit rotation angle, e, between 45° and 60°.

(b) Scanning pattern shall ensure that the full weld section is covered.

**10.15.6** Welds shall be examined using an angle-beam search unit conforming to the requirements of 10.14 and ASTM E 164. Following calibration and during testing, the only instrument adjustment permitted is in the sensitivity-level adjustment with the calibrated gain control or attenuator. Sensitivity shall be increased from the reference level for weld scanning in accordance with Table 21.

**10.15.6.1** If mechanically possible, all welds shall be scanned from both sides on the same face for longitudinal and transverse discontinuities. The applicable scanning pattern, or patterns, shown in Figure 35 shall be used.

**10.15.6.2** The testing angle shall be as shown in Table 20.

**10.15.6.3** When a discontinuity indication appears on the screen, the maximum attainable indication from the discontinuity shall be adjusted to produce a horizontal reference level trace deflection on the display. This adjustment shall be made with the calibrated gain control or attenuator, and the instrument reading in decibels shall be recorded on the ultrasonic test report under the heading Indication Level, a.



Copyright American Welding Society
Provided by IHS under license with AWS
No reproduction or networking permitted without license from IHS
Not for Resale

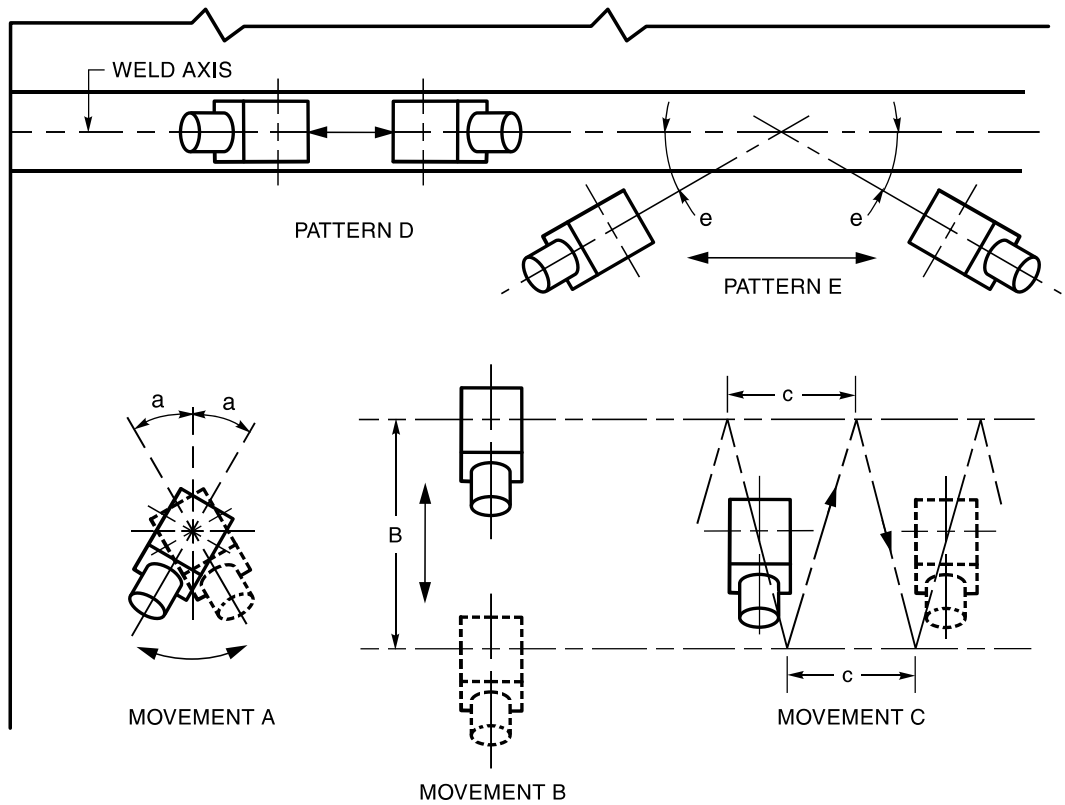


General Notes:
1. Testing patterns are all symmetrical around the weld axis with the exception of pattern D, which is conducted directly over the weld axis.
2. Testing from both sides of the weld axis is to be made wherever mechanically possible.

**Figure 35—Plan View of UT Scanning Patterns**

**10.15.6.4** The attenuation factor, c, on the test report is obtained by subtracting 1 in. [25.4 mm] from the sound-path distance and multiplying the remainder by 2 [0.0787].

**10.15.6.5** The indication rating, d, on the test report is the difference between the reference level and the indication level after the indication level has been corrected by the attenuation factor.

Instruments with gain in dB: a – b – c = d

Instruments with attenuation in dB: b – a – c = d

**10.15.6.6** The length of a discontinuity, as entered under indication length on the test report, shall be determined by locating the points at each end at which the indication amplitude drops 6 dB (50%) and measuring between the centerlines of those transducer locations.

**10.15.6.7** Each weld discontinuity shall be accepted or rejected on the basis of its indication rating and its length in accordance with Table 21. Only those discontinuities which are rejectable need be recorded on the test report.

**10.15.7** Each rejectable discontinuity shall be indicated on the weld by a mark directly over the discontinuity for its entire length. The depth from the surface and type of discontinuity shall be noted on nearby base metal.

**10.15.8** Welds found unacceptable by ultrasonic testing shall be repaired by methods permitted by Section 12, Weld Repairs, of this specification. Repaired welds shall be reexamined ultrasonically, and an additional report form completed.



Copyright American Welding Society
Provided by IHS under license with AWS
No reproduction or networking permitted without license from IHS
Not for Resale

## Table 20
## Ultrasonic Testing Angle

Procedure Chart

| Weld Type | 5/16 [8] to ≤1-1/2 [40] | | >1-1/2 [40] to ≤1-3/4 [45] | | >1-3/4 [45] to ≤2-1/2 [65] | | >2-1/2 [65] to ≤3-1/2 [90] | | >3-1/2 [90] to ≤4-1/2 [115] | | >4-1/2 [115] to ≤5 [125] | | >5 [125] to ≤6-1/2 [165] | | >6-1/2 [165] to ≤7 [180] | | >7 [180] to ≤8 [200] | |
|---|---|---|---|---|---|---|---|---|---|---|---|---|---|---|---|---|---|---|
| | | * | | * | | * | | * | | * | | * | | * | | * | | * |
| Butt | 1 | O | 1 | F | 1G or 4 | F | 1G or 5 | F | 6 or 7 | F | 8 or 10 | F | 9 or 11 | F | 12 or 13 | F | 12 | F |
| T- | 1 | O | 1 | F or XF | 4 | F or XF | 5 | F or XF | 7 | F or XF | 10 | F or XF | 11 | F or XF | 13 | F or XF | — | — |
| Corner | 1 | O | 1 | F or XF | 1G or 4 | F or XF | 1G or 5 | F or XF | 6 or 7 | F or XF | 8 or 10 | F of XF | 9 or 11 | F or XF | 13 or 14 | F or XF | — | — |
| Electrogas & Electroslag | 1 | O | 1 | O | 1G or 4 | 1** | 1G or 3 | P1 or P3 | 6 or 7 | P3 | 11 or 15 | P3 | 11 or 15 | P3 | 11 or 15 | P3 | 11 or 15** | P3 |

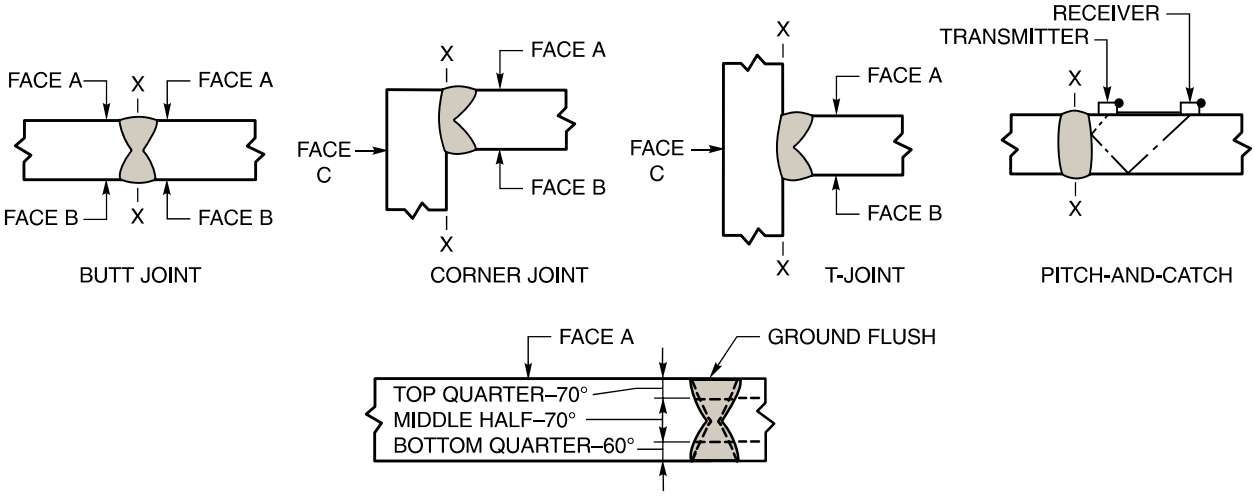


General Notes:

1. Where possible, all examinations shall be made from Face A and in Leg 1, unless otherwise noted in this table.
2. Root areas of single groove weld joints which have backing not requiring removal by contract, shall be tested in Leg 1, where possible, with Face A being that opposite the backing. (Grinding of the weld face or testing from additional weld faces may be necessary to permit complete scanning of the weld root.)
3. Examination in Leg II or III shall be made only to satisfy provisions of this table or when necessary to test weld areas made inaccessible by an unground weld surface, or interference with other portions of the weldment.
4. A maximum of Leg III shall be used only where thickness or geometry prevents scanning of complete weld areas and heat-affected zones in Leg I or Leg II.
5. On tension welds in cyclically loaded structures, the top quarter of thickness shall be tested with the final leg of sound progressing from Face B toward Face A, and the bottom quarter of thickness shall be tested with the final leg of sound progressing from Face A toward Face B; i.e., the top quarter of thickness shall be tested either from A in Leg II or from B in Leg I at the contractor's option, unless otherwise specified in the contract documents.
6. The weld face indicated shall be ground flush before using procedure 1G, 6, 8, 9, 12, 14, or 15. Face A for both connected members shall be in the same plane.

(See Legend on next page)



Copyright American Welding Society
Provided by IHS under license with AWS
No reproduction or networking permitted without license from IHS
Not for Resale

## Table 20 (Continued)
## Ultrasonic Testing Angle

Legend:

X — Check from Face "C."
G — Grind weld face flush.
O — Not required.
A Face — The face of the material from which the initial scanning is done (on T- and corner joints, follow above sketches).
B Face — Opposite the "A" face (same plate).
C Face — The face opposite the weld on the connecting member or a T- or corner joint.
* — Required only where reference level indication of discontinuity is noted in fusion zone (weld metal to base metal interface) while searching at scanning level with primary procedures selected from first column.
** — Use 15 in. [375 mm] or 20 in. [500 mm] screen distance calibration.
P — Pitch and catch shall be conducted for further discontinuity evaluation in only the middle half of the material thickness with only 45° or 70° transducers of equal specification, both facing the weld. (Transducers shall be held in a fixture to control positioning—see sketch.) Amplitude calibration for pitch and catch is normally made by calibrating a single search unit. When switching to dual search units for pitch and catch inspection, there should be assurance that this calibration does not change as a result of instrument variables.
F — Weld metal to base metal interface indications shall be further evaluated with either 70°, 60°, or 45° transducer—whichever sound path is nearest to being perpendicular to the suspected fusion surface.

Procedure Legend

| | Area of Weld Thickness | | |
|---|---|---|---|
| No. | Top Quarter | Middle Half | Bottom Quarter |
| 1 | 70° | 70° | 70° |
| 2 | 60° | 60° | 60° |
| 3 | 45° | 45° | 45° |
| 4 | 60° | 70° | 70° |
| 5 | 45° | 70° | 70° |
| 6 | 70°G A | 70° | 60° |
| 7 | 60° B | 70° | 60° |
| 8 | 70°G A | 60° | 60° |
| 9 | 70°G A | 60° | 45° |
| 10 | 60° B | 60° | 60° |
| 11 | 45° B | 70°** | 45° |
| 12 | 70°G A | 45° | 70°G B |
| 13 | 45° B | 45° | 45° |
| 14 | 70°G A | 45° | 45° |
| 15 | 70°G A | 70°A B | 70°G B |



Copyright American Welding Society
Provided by IHS under license with AWS
No reproduction or networking permitted without license from IHS
Not for Resale

## Table 21
## Ultrasonic Acceptance and Rejection Criteria

| Flaw Class | Weld Thickness,(1) in. [mm] and Search Unit Angle | | | | | | | | | | |
|---|---|---|---|---|---|---|---|---|---|---|---|
| | ≥ 5/16 [8] to ≤ 3/4 [20] | > 3/4 [20] to ≤ 1-1/2 [40] | > 1-1/2 [40] to ≤ 2-1/2 [65] | | | > 2-1/2 [65] to ≤ 4 [100] | | | > 4 [100] to ≤ 8 [200] | | |
| | 70° | 70° | 70° | 60° | 45° | 70° | 60° | 45° | 70° | 60° | 45° |
| Class A | +10 & lower | +8 & lower | +4 & lower | +7 & lower | +9 & lower | +1 & lower | +4 & lower | +6 & lower | –2 & lower | +1 & lower | +3 & lower |
| Class B | +11 | +9 | +5<br>+6 | +8<br>+9 | +10<br>+11 | +2<br>+3 | +5<br>+6 | +7<br>+8 | –1<br>+0 | +2<br>+3 | +4<br>+5 |
| Class C | +12 | +10 | +7<br>+8 | +10<br>+11 | +12<br>+13 | +4<br>+5 | +7<br>+8 | +9<br>+10 | +1<br>+2 | +4<br>+5 | +6<br>+7 |
| Class D | +13 & up | +11 & up | +9 & up | +12 & up | +14 & up | +6 & up | +9 & up | +11 & up | +3 & up | +6 & up | +8 & up |

Note:
(1) Weld thickness shall be defined as the nominal thickness of the thinner of the two parts being joined.

General Notes:
1. Class B and C flaws shall be separated by at least 2L, L being the length of the longer flaw, except that when two or more such flaws are not separated by at least 2L, but the combined length of flaws and their separation distance is equal to or less than the maximum allowable length under the provisions of Class B or C, the flaw shall be considered a single acceptable flaw.
2. Class B and C flaws shall not begin at a distance less than 2L from the end of the weld, L being the flaw length.
3. Discontinuities detected at "scanning level" in the root face area of complete penetration double groove weld joints shall be evaluated using an indicating rating 4 dB more sensitive than described in 10.15.6.5 when such welds are designated as "tension welds" on the drawing (subtract 4 dB from the indication rating "d"). This shall not apply if the weld joint is backgouged to sound metal to remove the root face, and magnetic particle examination is used to verify that the root face has been removed.

Class A (Large Flaws)
Any indication in this category shall be rejected (regardless of length).

Class B (Medium Flaws)
Any indication in this category having a length greater than 3/4 in. [20 mm] shall be rejected.

Class C (Small Flaws)
Any indication in this category having a length greater than 2 in. [50 mm] length in the middle half or 3/4 in. [20 mm] length in the top of bottom quarter of weld thickness shall be rejected.

Class D (Minor Flaws)
Any indication in this category shall be accepted regardless of length or location in the weld.

| Scanning Levels | |
|---|---|
| Sound path,(2) in. [mm] | Above Zero Reference, dB |
| ≤2-1/2 [65] | 20 |
| >2-1/2 [65] to ≤5 [125] | 25 |
| >5 [125] to ≤10 [250] | 35 |
| >10 [250] to ≤15 [375] | 45 |

Note: (2) refers to sound path distance; NOT material thickness.

**10.15.9** A report form which clearly identifies the work and the area of inspection shall be completed by the ultrasonic inspector at the time of the inspection. The report form for welds that are unacceptable need only contain sufficient information to identify the weld, the inspector (signature), and the acceptability of the weld. An example of such a form is shown in Annex A.

**10.15.10** All report forms pertaining to a weld subject to contractual ultrasonic testing by the Manufacturer for the Owner, including those that show unacceptable quality prior to repair, shall be available for review by the Owner's representative before the weld is accepted.

**10.15.11** A full set of completed report forms of welds subject to contractual ultrasonic testing by the Manufacturer for the Owner, including any that show unacceptable quality prior to repair, shall be delivered to the Owner upon completion of the work. The Manufacturer's obligation to retain ultrasonic reports shall cease



Copyright American Welding Society
Provided by IHS under license with AWS
No reproduction or networking permitted without license from IHS
Not for Resale

(1) upon delivery of this full set to the Owner or (2) at the end of one full year after completion of the Manufacturer's work, in the event that delivery is not required, or as otherwise provided in the contract.

### 10.16 Magnetic Particle Examination of Welds

**10.16.1** The procedure and technique for magnetic particle examination, when required, shall be in accordance with ASTM E 709, *Practice for Magnetic Particle Inspection* (latest edition), and the standards of acceptance shall be in accordance with 10.16.4.

**10.16.2** Variations in testing procedure, equipment, and acceptance standards not included in this specification may be used upon agreement between the Manufacturer and the Owner.

**10.16.3** Welds subject to magnetic particle examination shall first be subject to visual examination in accordance with the requirements of 10.6 and 10.7.

**10.16.4** Welds that are subject to magnetic particle examination shall be unacceptable if any discontinuities exceed the following limits:

(1) A magnetic particle indication of any porosity or fusion-type discontinuity, that is 1/16 in. [1.5 mm] or larger in greatest dimension, shall not exceed the size, B, indicated in Figure 33 for the effective throat or weld size involved. The distance from any indication of an acceptable porosity or fusion-type discontinuity to another discontinuity, to an edge, or to any intersecting weld shall not be less than the minimum clearance, C, indicated by Figure 33 for the size of discontinuity under examination. (Annex B illustrates the application of the requirements given. A sample report form is shown in Annex A.)

(2) Discontinuities meeting the requirements of 10.16.4(1) and having a greatest dimension of less than 1/16 in. [1.5 mm] are nevertheless not acceptable if the sum of their greatest dimensions exceeds 3/8 in. [10 mm] in any linear inch [25 mm] of weld.

(3) The limitations given by Figure 33 for a groove weld effective throat of 1-1/2 in. [40 mm] shall apply to groove welds of greater thickness.

### 10.17 Liquid Penetrant Examination of Welds

**10.17.1** When liquid penetrant examination is required, the procedure and technique shall be in accordance with ASTM E 165, *Recommended Practice for Liquid Penetrant Inspection*. The standard of acceptance shall be in accordance with 10.17.3.

**10.17.2** Variations in testing procedure, equipment, and acceptance standards not included in this specification may be used upon agreement between the Manufacturer and Owner.

**10.17.3** Welds that are subject to liquid penetrant examination shall be evaluated on the basis of the requirements for visual inspection as defined in 10.6 and 10.7.

## 11. Field Weld Repair and Modification

**11.1 General.** Repairs and modifications shall require the approval of the Engineer (see 11.3.1). The material composition of the components shall be identified and the welding procedures approved by the Engineer before starting repair or modification. The repair and modification work shall conform to all applicable sections of this specification. When a modification includes removal, addition, or alteration of structural members, the Engineer shall verify that the original design requirements are satisfied. This section is a guide to aid the Manufacturer and the Owner by suggesting pertinent items that shall be considered at the time of initial contract negotiations. The eventual need for field weld repairs as a result of normal wear and tear, modification, or accident is often forgotten. Every repair, no matter how small, becomes the total responsibility of the Owner and the organization performing the repair work, who must consider its effect on the equipment involved. The original Manufacturer should be contacted to ensure that the projected repair is advisable and sound from an engineering standpoint. Safe recommended repairs and modifications can only be accomplished with knowledge of the design loading on the equipment and the resulting stresses at the repair locations.

***Caution: Leaking of flammable liquids from pressurized lines may exist and shall be addressed to prevent fires when welding and cutting is performed. Confined space circumstances can also exist on some repair operations.***

**11.2 Field Repair—Manufacturer's Responsibility.** The Manufacturer shall furnish, as a part of instruction manuals or as a separate publication, instructions for field repair when required by the contract. The completeness and extent of material identification and welding repair procedures shall be covered in the contract.

**11.2.1** Instructions by the Manufacturer shall include the following:

(1) Qualification requirements of the welder performing the repair (see Section 9, Qualification, for minimum requirement).

(2) A list of materials used in the manufacture of the equipment and the location of materials by some appropriate means such as an outline drawing. This shall include lists and locations of those materials that:



Copyright American Welding Society
Provided by IHS under license with AWS
No reproduction or networking permitted without license from IHS
Not for Resale

(a) Are easily weldable without preheat or postheat treatment, provided ambient temperatures are considered normal, and

(b) Require special welding procedures. For special welding procedures, the Manufacturer shall include information concerning the base metals, filler metals, and preheat or postheat treatment so that properly qualified welders can make an acceptable weld repair.

**11.2.2** All field weld repair procedures shall include recommended means for inspection or testing of the repair by the Engineer or the equipment manufacturer and necessary nondestructive testing procedures.

**11.2.3** The manufacturers should list special precautions for field welding of their products and other necessary precautions. The following items should be addressed.

**11.2.3.1** Field repair should not proceed:

(1) Without adequate preparation (thorough cleaning and joint preparation) and a full review of any previous repairs in the area involved;

(2) Until the welder and weld repair area are adequately protected from the elements, and a proper equipment environment is provided; or

(3) Without considering the stresses on the members.

**11.2.3.2** A method by which stresses can be relieved before welding, as well as the sequence of repair, should be considered.

**11.2.3.3** The Manufacturer shall indicate weldments and components on which field repairs are not recommended.

**11.2.4** Safety precautions and good workmanship instructions listed in the various ANSI and AWS specifications shall be followed, including, but not limited to ANSI Z49.1, *Safety in Welding, Cutting, and Allied Processes*.

### 11.3 Field Repair—Owner's Responsibility

**11.3.1** The Owner shall appoint the Engineer who shall be responsible for the actual field execution of the repair work, and the complete detailed adherence to the repair procedures furnished by the Manufacturer.

**11.3.2** Owners or their agents shall permit only qualified and properly trained personnel to perform field weld repairs, such as welders qualified in accordance with this specification.

**11.3.3** Full and complete records of all repaired welds shall be maintained by means of marked outline drawings or other appropriate documents.

# 12. Repair and Correction of Defects

### 12.1 Weld Repairs

**12.1.1 Overlap or Excessive Convexity.** Excess weld metal shall be removed.

**12.1.2 Excessive Concavity of Weld or Crater and Undersize Welds.** Prepare surfaces and deposit additional weld metal. All slag shall be removed and the adjacent base metal shall be clean before additional welding.

**12.1.3 Cracks in Weld or Base Metal.** Determine the extent of the crack by liquid penetrant, magnetic particle examination, or other suitable means. Remove the crack and adjacent sound metal for a 2 in. [50 mm] length beyond each end of the crack.

Prior to rewelding, these areas shall be checked by an appropriate inspection method, such as magnetic particle or liquid penetrant, to ensure complete removal of cracked material. After rewelding in conformance to an approved repair welding procedure, the repaired area(s) shall be reinspected per Section 10.

**12.1.4 Undercutting.** Undercutting may be repaired by grinding and blending or by welding. It is preferably done by careful grinding and blending. Grinding should be performed with a pencil-type grinder. The grinding marks should be transverse to the length of the weld, and have a $250 \times 10^{-6}$ in. [$6 \times 10^{-6}$ m] finish or better. Blending shall be done with a slope not to exceed 1 in 3. On plates of 1/2 in. [13 mm] thickness and above, up to 7% reduction of base-material thickness is permitted. Repair of undercut areas by grinding and blending in excess of this amount may be permitted with the approval of the Design Engineer. When undercut is to be repaired by welding, the surfaces should be prepared and then additional weld metal deposited.

**12.1.5** Weld areas containing unacceptable incomplete fusion, porosity or slag inclusions shall be removed (see 12.3) and rewelded.

### 12.2 Base Metal Repairs

**12.2.1 Defects in Edges of Plate.** If a defect is found in a plate edge that exceeds the limits imposed in Table 7, it shall be removed and repaired in accordance with 7.3.

**12.2.2 Arc Strikes and Temporary Attachment Areas.** Arc strikes or severed temporary welds shall be ground smooth to ensure that no abrupt change in section exists. The smoothed area shall be inspected by an appropriate nondestructive testing method to ensure that there are no existing cracks or similar discontinuities. The Engineer may require hardness testing of the area to



Copyright American Welding Society
Provided by IHS under license with AWS
No reproduction or networking permitted without license from IHS
Not for Resale

verify material properties. Any cracks or similar discontinuities shall be repaired in accordance with 12.1.3.

**12.3 Removal of Defective Areas.** The removal of weld metal or portions of the base metal may be done by machining, grinding, chipping, oxygen gouging, or air carbon arc gouging. It shall be done in such a manner that the remaining weld metal is not nicked or undercut. Oxygen gouging shall not be used on quenched and tempered steel. Unacceptable portions of the weld shall be removed without substantial removal of the base metal. Additional weld metal, to compensate for any deficiency in size, shall be deposited using low-hydrogen electrodes, preferably smaller in diameter than those used for making the original weld, and preferably not more than 5/32 in. [4 mm] in diameter. The surfaces shall be cleaned thoroughly before welding. Defects that occur in material handling that do not affect the structural integrity of the design can be repaired by grinding.

**12.4 Distortion and Camber.** Members distorted by welding may be straightened by mechanical means or by carefully supervised application of a limited amount of localized heat. The temperature of heated areas, as measured by approved methods, shall be limited to that imposed by the materials exposed to the heat, but it shall not exceed 1100°F [590°C] for quenched and tempered or normalized and tempered steels, nor 1200°F [650°C] for other steels. The part to be heated for straightening shall be substantially free of stress and external forces, except those stresses resulting from the mechanical straightening method used in conjunction with the application of heat. All heat-straightening operations shall be covered by an approved written procedure (see 7.2.4).

**12.5 Correction of Improperly Fitted and Welded Members.** If a weld is found to be unacceptable after additional work has rendered it inaccessible, or new conditions make correction of the unacceptable weld dangerous or ineffectual, the original conditions shall be restored by removing welds or members, or both, before the corrections are made. If this is not done, the deficiency shall be compensated for by additional work performed according to an approved revised design. Improperly fitted and welded members require Design Engineer approval prior to cutting apart. Cutting is to be handled by methods similar to those in 12.3.



Copyright American Welding Society
Provided by IHS under license with AWS
No reproduction or networking permitted without license from IHS
Not for Resale

## Mandatory Annex

# Annex I

# Prequalified Weld Joints

(This Annex is a part of AWS D14.1/D14.1M:2005, *Specification for Welding of Industrial and Mill Cranes and Other Material Handling Equipment*, and includes mandatory elements for use with this standard.)

Butt Joint (B)
Corner Joint (C)
Limited (L)
Square-Groove Weld (1)

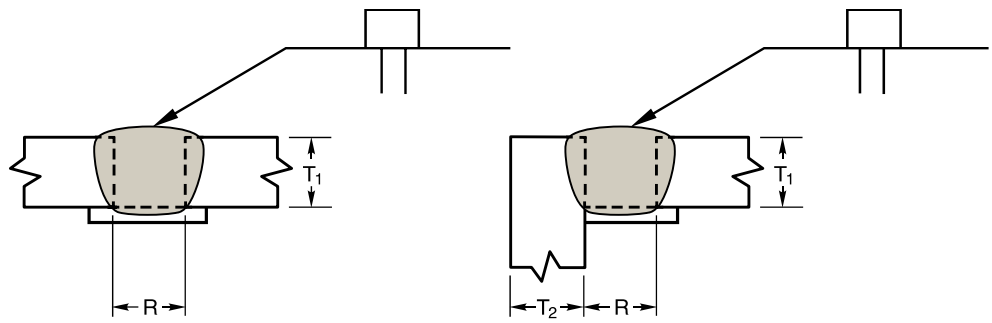


| Welding Process | Joint Designation | Base Metal Thickness, in. [mm] (U = Unlimited) | | Groove Preparation | | | Permitted Welding Positions | Gas Shielding for FCAW | Notes |
|---|---|---|---|---|---|---|---|---|---|
| | | | | Root Opening | Tolerances, in. [mm] | | | | |
| | | $T_1$ | $T_2$ | | As Detailed (see 6.13) | As Fit Up (see 7.4.4) | | | |
| SMAW | B-L1a | 1/4 [6] max | — | $R = T_1$ | +1/16 [2], –0 | +1/4 [6], –1/16 [2] | All | — | — |
| | C-L1a | 1/4 [6] max | U | $R = T_1$ | +1/16 [2], –0 | +1/4 [6], –1/16 [2] | All | — | — |
| GMAW FCAW | B-L1a-GF | 3/8 [10] max | — | $R = T_1$ | +1/16 [2], –0 | +1/4 [6], –1/16 [2] | All | Not Required | A |

**(A)**

Butt Joint (B)
Limited (L)
Square-Groove Weld (1)

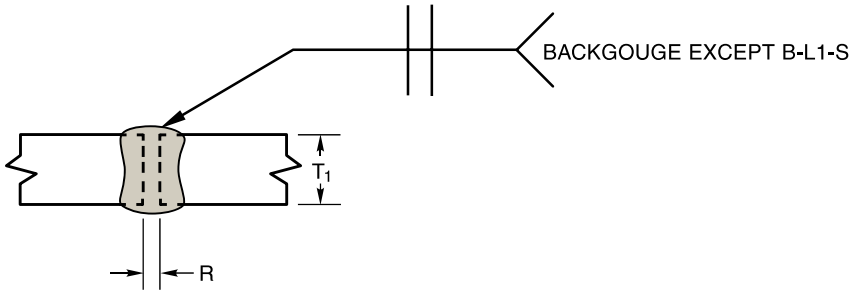


| Welding Process | Joint Designation | Base Metal Thickness, in. [mm] (U = Unlimited) | | Groove Preparation | | | Permitted Welding Positions | Gas Shielding for FCAW | Notes |
|---|---|---|---|---|---|---|---|---|---|
| | | | | Root Opening, in. [mm] | Tolerances, in. [mm] | | | | |
| | | $T_1$ | $T_2$ | | As Detailed (see 6.13) | As Fit Up (see 7.4.4) | | | |
| SMAW | B-L1b | 1/4 [6] max | — | $R = \frac{T_1}{2}$ | +1/16 [2], –0 | +1/16 [2], –1/8 [3] | All | — | C |
| GMAW FCAW | B-L1b-GF | 3/8 [10] max | — | R = 0 to 1/8 [3] | +1/16 [2], –0 | +1/16 [2], –1/8 [3] | All | Not Required | A, C |
| SAW | B-L1-S | 3/8 [10] max | — | R = 0 | ±0 | +1/16 [2], –0 | Flat | — | D |

**(B)**

Note A: Not prequalified for gas metal arc welding using short circuiting transfer.
Note C: Gouge root before welding second side.
Note D: Welds shall be centered on joint.

**Figure I.1—Prequalified Complete Joint Penetration Groove Welded Joints**



Copyright American Welding Society
Provided by IHS under license with AWS
No reproduction or networking permitted without license from IHS
Not for Resale

T-Joint (T)
Corner Joint (C)
Limited (L)
Square-Groove Weld (1)

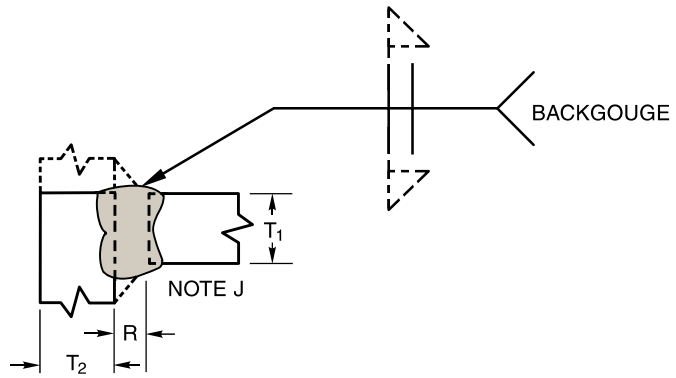


| Welding Process | Joint Designation | Base Metal Thickness, in. [mm] (U = Unlimited) | | Groove Preparation | | | Permitted Welding Positions | Gas Shielding for FCAW | Notes |
|---|---|---|---|---|---|---|---|---|---|
| | | | | | Tolerances, in. [mm] | | | | |
| | | $T_1$ | $T_2$ | Root Opening, in. [mm] | As Detailed (see 6.13) | As Fit Up (see 7.4.4) | | | |
| SMAW | TC-L1b | 1/4 [6] max | U | $R = \frac{T_1}{2}$ | +1/16 [2], –0 | +1/16 [2], –1/8 [3] | All | — | C, J |
| GMAW FCAW | TC-L1-GF | 3/8 [10] max | U | R = 0 to 1/8 [3] | +1/16 [2], –0 | +1/16 [2], –1/8 [3] | All | Not Required | A, C, J |
| SAW | TC-L1-S | 3/8 [10] max | U | R = 0 | ±0 | +1/16 [2], –0 | Flat | — | C, J |

**(C)**

Butt Joint (B)
Unlimited (U)
Limited (L)
Single-V-Groove Weld (2)

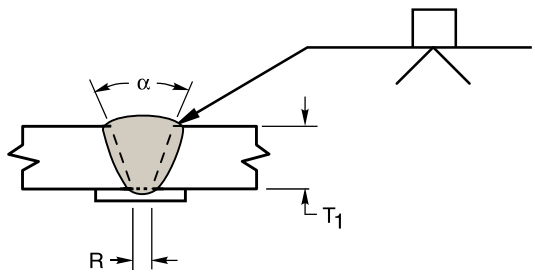


| Tolerances, in. [mm] for R; ° for α | |
|---|---|
| As Detailed (see 6.13) | As Fit Up (see 7.4.4) |
| R = +1/16 [2], –0 | +1/4 [6], –1/16 [2] |
| α = +10°, –0° | +10°, –5° |

| Welding Process | Joint Designation | Base Metal Thickness, in. [mm] (U = Unlimited) | | Groove Preparation | | Permitted Welding Positions(1) | Gas Shielding for FCAW | Notes |
|---|---|---|---|---|---|---|---|---|
| | | $T_1$ | $T_2$ | Root Opening, in. [mm] | Groove Angle | | | |
| SMAW | B-U2a | U | — | R = 1/4 [6] | α = 45° | All | — | — |
| | | | | R = 3/8 [10] | α = 30° | F, V, OH | — | — |
| | | | | R = 1/2 [13] | α = 20° | F, V, OH | — | — |
| GMAW FCAW | B-U2a-GF | U | — | R = 3/16 [5] | α = 30° | F, V, OH | Required | A |
| | | | | R = 1/4 [6] | α = 30° | F, V, OH | Not Req. | A |
| | | | | R = 3/8 [10] | α = 45° | F, V, OH | Not Req. | A |
| SAW | B-L2a-S | 2 [50] max | — | R = 1/4 [6] | α = 30° | F | — | — |
| SAW | B-U2-S | U | — | R = 5/8 [16] | α = 20° | F | — | — |

**(D)**

Note A: Not prequalified for gas metal arc welding using short circuiting transfer.
Note C: Gouge root before welding other side.
Note J: If fillet welds are used in statically loaded structures to reinforce groove welds in corner and T-joints, they shall be equal to 1/4 $T_1$, but need not exceed 3/8 in. [10 mm]. Groove welds in corner and T-joints of cyclically loaded structures shall be reinforced with fillet welds equal to 1/4 $T_1$, but need not exceed 3/8 in. [10 mm].

(1) F = Flat, OH = Overhead, V = Vertical

## Figure I.1 (Continued)—Prequalified Complete Joint Penetration Groove Welded Joints



Copyright American Welding Society
Provided by IHS under license with AWS
No reproduction or networking permitted without license from IHS
Not for Resale

Corner Joint (C)
Unlimited (U)
Limited (L)
Single-V-Groove Weld (2)

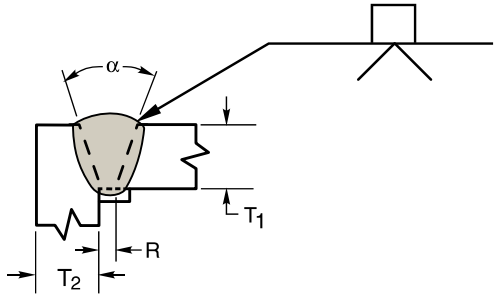


| Tolerances, in. [mm] for R; ° for α | |
|---|---|
| As Detailed (see 6.13) | As Fit Up (see 7.4.4) |
| R = +1/16 [2], –0 | +1/4 [6], –1/16 [2] |
| α = +10°, –0° | +10°, –5° |

| Welding Process | Joint Designation | Base Metal Thickness, in. [mm] (U = Unlimited) | | Groove Preparation | | Permitted Welding Positions(1) | Gas Shielding for FCAW | Notes |
|---|---|---|---|---|---|---|---|---|
| | | $T_1$ | $T_2$ | Root Opening, in. [mm] | Groove Angle | | | |
| SMAW | C-U2a | U | — | R = 1/4 [6] | α = 45° | All | — | — |
| | | | | R = 3/8 [10] | α = 30° | F, V, OH | — | — |
| | | | | R = 1/2 [13] | α = 20° | F, V, OH | — | — |
| GMAW FCAW | C-U2a-GF | U | — | R = 3/16 [5] | α = 30° | F, V, OH | Required | A |
| | | | | R = 3/8 [10] | α = 30° | F, V, OH | Not Req. | A |
| | | | | R = 1/4 [6] | α = 45° | F, V, OH | Not Req. | A |
| SAW | C-L2a-S | 2 [50] max | — | R = 1/4 [6] | α = 30° | F | — | — |
| SAW | C-U2-S | U | — | R = 5/8 [16] | α = 20° | F | — | — |

**(E)**

Butt Joint (B)
Unlimited (U)
Limited (L)
Single-V-Groove Weld (2)

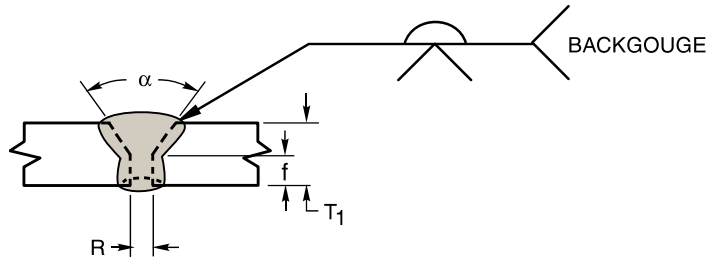


| Welding Process | Joint Designation | Base Metal Thickness, in. [mm] (U = Unlimited) | | Groove Preparation | | | Permitted Welding Positions | Gas Shielding for FCAW | Notes |
|---|---|---|---|---|---|---|---|---|---|
| | | | | Root Opening, Root Face, in. [mm] Groove Angle | Tolerances, in. [mm] for R & f; ° for α | | | | |
| | | $T_1$ | $T_2$ | | As Detailed (see 6.13) | As Fit Up (see 7.4.4) | | | |
| SMAW | B-U2 | U | — | R = 0 to 1/8 [3]<br>f = 0 to 1/8 [3]<br>α = 60° | +1/16 [2], –0<br>+1/16 [2], –0<br>+ 10°, –0° | +1/16 [2], –1/8 [3]<br>Not Limited<br>+10°, –5° | All | — | C |
| GMAW FCAW | B-U2-GF | U | — | R = 0 to 1/8 [3]<br>f = 0 to 1/8 [3]<br>α = 60° | +1/16 [2], –0<br>+1/16 [2], –0<br>+ 10°, –0° | +1/16 [2], –1/8 [3]<br>Not Limited<br>+10°, –5° | All | Not Required | A, C |
| SAW | B-L2c-S | Over 1/2 [13] to 1 [25] | — | R = 0<br>f = 1/4 [6] max<br>α = 60° | R = ±0<br>f = +0, –f<br>α = +10°, –0° | +1/16 [2], –0<br>±1/16 [2]<br>+10°, –5° | F | — | C |
| | | Over 1 [25] to 1-1/2 [40] | — | R = 0<br>f = 1/2 [13] max<br>α = 60° | | | | | |
| | | Over 1-1/2 [40] to 2 [50] | — | R = 0<br>f = 5/8 [16] max<br>α = 60° | | | | | |

**(F)**

Note A: Not prequalified for gas metal arc welding using short circuiting transfer.
Note C: Gouge root before welding other side.

(1) F = Flat, OH = Overhead, V = Vertical

**Figure I.1 (Continued)—Prequalified Complete Joint Penetration Groove Welded Joints**



Copyright American Welding Society
Provided by IHS under license with AWS
No reproduction or networking permitted without license from IHS
Not for Resale

Corner Joint (C)
Unlimited (U)
Single-V-Groove Weld (2)

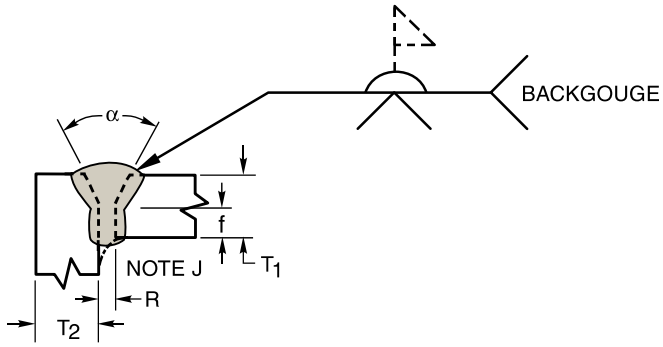


| Welding Process | Joint Designation | Base Metal Thickness, in. [mm] (U = Unlimited) | | Groove Preparation | | | Permitted Welding Positions | Gas Shielding for FCAW | Notes |
|---|---|---|---|---|---|---|---|---|---|
| | | $T_1$ | $T_2$ | Root Opening Root Face, in. [mm] Groove Angle | Tolerances, in. [mm] for R & f; ° for α: As Detailed (see 6.13) | Tolerances, in. [mm] for R & f; ° for α: As Fit Up (see 7.4.4) | | | |
| SMAW | C-U2 | U | U | R = 0 to 1/8 [3]<br>f = 0 to 1/8 [3]<br>α = 60° | +1/16 [2], –0<br>+1/16 [2], –0<br>+ 10°, –0° | +1/16 [2], –1/8 [3]<br>Not Limited<br>+10°, –5° | All | — | C, J |
| GMAW<br>FCAW | C-U2-GF | U | U | R = 0 to 1/8 [3]<br>f = 0 to 1/8 [3]<br>α = 60° | +1/16 [2], –0<br>+1/16 [2], –0<br>+ 10°, –0° | +1/16 [2], –1/8 [3]<br>Not Limited<br>+10°, –5° | All | Not Required | A, C, J |
| SAW | C-U2b-S | U | U | R = 0<br>f = 1/4 [6] max<br>α = 60° | R = ±0<br>f = +0, –1/4 [6]<br>α = +10°, –0° | +1/16 [2], –0<br>±1/16 [2]<br>+10°, –5° | Flat | — | C, J, K |

**(G)**

Butt Joint (B)
Unlimited (U)
Double-V-Groove Weld (3)

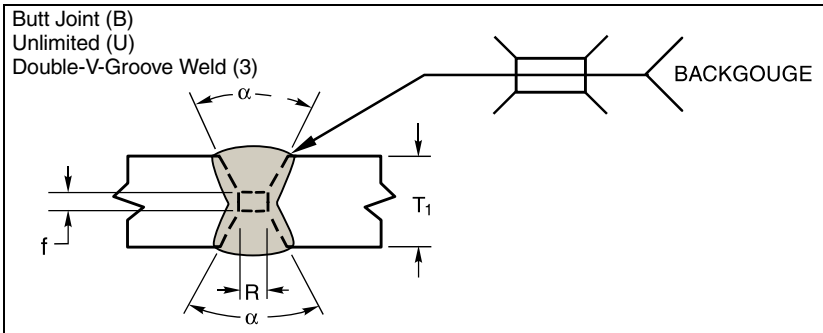


| Tolerances, in. [mm] for R, f, or Spacer; ° for α | |
|---|---|
| As Detailed (see 6.13) | As Fit Up (see 7.4.4) |
| R = ±0 | +1/4 [6], –0 |
| f = ±0 | +1/16 [2], –0 |
| α = +10°, –0° | +10°, –5° |
| Spacer = ±0 | +1/16 [2], –0 |

| Welding Process | Joint Designation | Base Metal Thickness, in. [mm] (U = Unlimited) | | Groove Preparation | | | Permitted Welding Positions(1) | Gas Shielding for FCAW | Notes |
|---|---|---|---|---|---|---|---|---|---|
| | | $T_1$ | $T_2$ | Root Opening, in. [mm] | Root Face, in. [mm] | Groove Angle | | | |
| SMAW | B-U3a | U, preferably 5/8 [16] or thicker<br>Spacer = 1/8R | — | R = 1/4 [6] | f = 0 to 1/8 [3] | α = 45° | All | — | C, M |
| | | | | R = 3/8 [10] | f = 0 to 1/8 [3] | α = 30° | F, V, OH | — | |
| | | | | R = 1/2 [13] | f = 0 to 1/8 [3] | α = 20° | F, V, OH | — | |
| SAW | B-U3a-S | U<br>Spacer = 1/4R | — | R = 5/8 [16] | f = 0 to 1/4 [6] | α = 20° | F | — | C, M |

**(H)**

Note A: Not prequalified for gas metal arc welding using short circuiting transfer.
Note C: Gouge root before welding other side.
Note J: If fillet welds are used in statically loaded structures to reinforce groove welds in corner and T-joints, they shall be equal to 1/4 $T_1$, but need not exceed 3/8 in. [10 mm]. Groove welds in corner and T-joints of cyclically loaded structures shall be reinforced with fillet welds equal to 1/4 $T_1$, but need not exceed 3/8 in. [10 mm].
Note K: Weld root after welding at least one pass on narrow side.
Note M: Double-groove welds may have grooves of unequal depth, but the depth of the shallower groove shall be no less than one-fourth of the thickness of the thinner part joined.

(1) F = Flat, OH = Overhead, V = Vertical

**Figure I.1 (Continued)—Prequalified Complete Joint Penetration Groove Welded Joints**



Copyright American Welding Society
Provided by IHS under license with AWS
No reproduction or networking permitted without license from IHS
Not for Resale

Butt Joint (B)
Unlimited (U)
Double-V-Groove Weld (3)

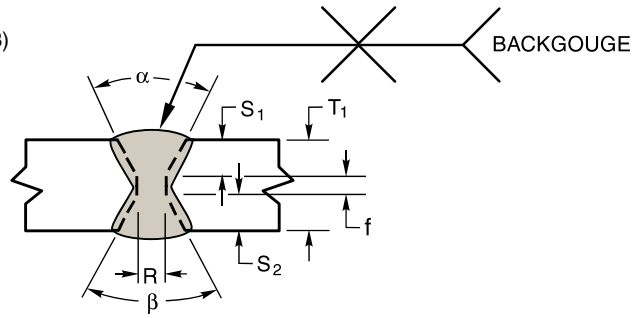


| For B-U3c-S only, in. [mm] | |
|---|---|
| $T_1$ | $S_1$ |
| >2 [51] to ≤2-1/2 [63] | 1-3/8 [35] |
| >2-1/2 [63] to ≤3 [75] | 1-3/4 [44] |
| >3 [75] to ≤3-5/8 [92] | 2-1/8 [54] |
| >3-5/8 [92] to ≤4 [102] | 2-3/8 [60] |
| >4 [102] to ≤4-3/4 [121] | 2-3/4 [70] |
| >4-3/4 [121] to ≤5-1/2 [140] | 3-1/4 [83] |
| >5-1/2 [140] to ≤6-1/4 [159] | 3-3/4 [95] |
| For $T_1$ > 6-1/4 [159], or $T_1$ ≤2 [50] $S_1 = 2/3\ (T_1 - 1/4\ [6])$ | |

| Welding Process | Joint Designation | Base Metal Thickness, in. [mm] (U = Unlimited) | | Groove Preparation | | | Permitted Welding Positions | Gas Shielding for FCAW | Notes |
|---|---|---|---|---|---|---|---|---|---|
| | | | | Root Opening Root Face, in. [mm] Groove Angle | Tolerances, in. [mm] for R & f; ° for α | | | | |
| | | $T_1$ | $T_2$ | | As Detailed (see 6.13) | As Fit Up (see 7.4.4) | | | |
| SMAW | B-U3b | U preferably 5/8 [16] or thicker | — | R = 0 to 1/8 [3] f = 0 to 1/8 [3] α = β = 60° | +1/16 [2], –0 +1/16 [2], –0 +10°, –0° | +1/16 [2], –1/8 [3] Not Limited +10°, –5° | All | — | C, M |
| GMAW FCAW | B-U3-GF | | | | | | All | Not Required | A, C, M |
| SAW | B-U3c-S | U | — | R = 0 f = 1/4 [6] max α = 60° | ±0 +0, –f +10°, –0° | +1/16 [2], –0 ±1/16 [2] +10°, –5° | Flat | — | C, M |
| | | | | To find $S_1$ see table above; $S_2 = T_1 - (S_1 + f)$ | | | | | |

**(I)**

Butt Joint (B)
Unlimited (U)
Single-Bevel-Groove Weld (4)

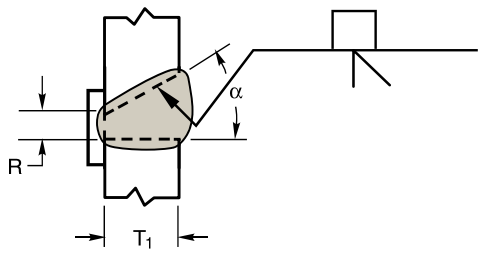


| Tolerances, in. [mm] for R; ° for α | |
|---|---|
| As Detailed (see 6.13) | As Fit Up (see 7.4.4) |
| R = +1/16 [2], –0 | +1/4 [6], –1/16 [2] |
| α = +10°, –0° | +10°, –5° |

| Welding Process | Joint Designation | Base Metal Thickness, in. [mm] (U = Unlimited) | | Groove Preparation | | Permitted Welding Positions | Gas Shielding for FCAW | Notes |
|---|---|---|---|---|---|---|---|---|
| | | $T_1$ | $T_2$ | Root Opening, in. [mm] | Groove Angle | | | |
| SMAW | B-U4a | U | — | R = 1/4 [6] | α = 45° | All | — | Br |
| | | | | R = 3/8 [10] | α = 30° | All | — | Br |
| GMAW FCAW | B-U4a-GF | U | — | R = 3/16 [5] | α = 30° | All | Required | A |
| | | | | R = 1/4 [6] | α = 45° | All | Not Req. | A |
| | | | | R = 3/8 [10] | α = 30° | Flat | Not Req. | A |

**(J)**

Note A: Not prequalified for gas metal arc welding using short circuiting transfer.
Note Br: Dynamic load application limits these joints to the horizontal welding position.
Note C: Gouge root before welding second side.
Note M: Double-groove welds may have grooves of unequal depth, but the depth of the shallower groove shall be no less than one-fourth of the thickness of the thinner part joined.

## Figure I.1 (Continued)—Prequalified Complete Joint Penetration Groove Welded Joints



Copyright American Welding Society
Provided by IHS under license with AWS
No reproduction or networking permitted without license from IHS
Not for Resale

T- or Corner Joint (TC)
Unlimited (U)
Single-Bevel-Groove Weld (4)

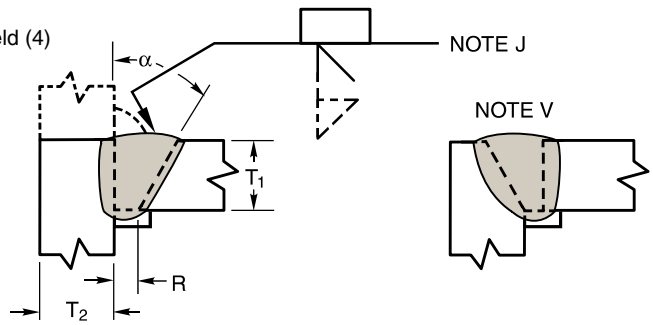


| Tolerances, in. [mm] for R; ° for α | |
|---|---|
| As Detailed (see 6.13) | As Fit Up (see 7.4.4) |
| R = +1/16 [2], –0 | +1/4 [6], –1/16 [2] |
| a = +10°, –0° | +10°, –5° |

| Welding Process | Joint Designation | Base Metal Thickness, in. [mm] (U = Unlimited) $T_1$ | $T_2$ | Groove Preparation: Root Opening, in. [mm] | Groove Angle | Permitted Welding Positions(1) | Gas Shielding for FCAW | Notes |
|---|---|---|---|---|---|---|---|---|
| SMAW | TC-U4a | U | U | R = 1/4 [6] | α = 45° | All | — | J, V |
| | | | | R = 3/8 [10] | α = 30° | F, V, OH | — | J, V |
| GMAW FCAW | TC-U4a-GF | U | U | R = 3/16 [5] | α = 30° | All | Required | A, J, V |
| | | | | R = 3/8 [10] | α = 30° | F | Not Req. | A, J, V |
| | | | | R = 1/4 [6] | α = 45° | All | Not Req. | A, J, V |
| SAW | TC-U4a-S | U | U | R = 3/8 [10] | α = 30° | F | — | J, V |
| | | | | R = 1/4 [6] | α = 45° | F | — | J, V |

**(K)**

Butt Joint (B)
Unlimited (U)
Single-Bevel-Groove Weld (4)

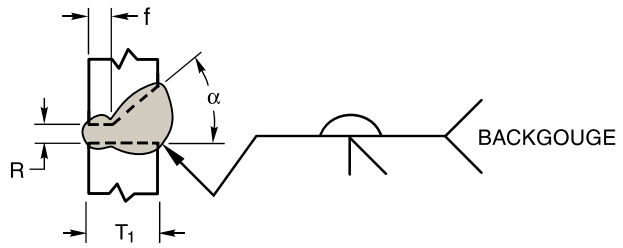


| Welding Process | Joint Designation | Base Metal Thickness, in. [mm] (U = Unlimited) $T_1$ | $T_2$ | Groove Preparation: Root Opening, Root Face, in. [mm] Groove Angle | Tolerances, in. [mm] for R & f; ° for α: As Detailed (see 6.13) | As Fit Up (see 7.4.4) | Permitted Welding Positions | Gas Shielding for FCAW | Notes |
|---|---|---|---|---|---|---|---|---|---|
| SMAW | B-U4b | U | — | R = 0 to 1/8 [3] f = 0 to 1/8 [3] α = 45° | +1/16 [2], –0 +1/16 [2], –0 +10°, –0° | +1/16 [2], –1/8 [3] Not Limited 10°, –5° | All | — | C |
| GMAW FCAW | B-U4b-GF | U | — | | | | All | Not Required | A, C |

**(L)**

Note A: Not prequalified for gas metal arc welding using short circuiting transfer.
Note C: Gouge root before welding second side.
Note J: If fillet welds are used in statically loaded structures to reinforce groove welds in corner and T-joints, they shall be equal to 1/4 $T_1$, but need not exceed 3/8 in. [10 mm]. Groove welds in corner and T-joints of cyclically loaded structures shall be reinforced with fillet welds equal to 1/4 $T_1$, but need not exceed 3/8 in. [10 mm].
Note V: For corner joints, the outside groove preparation may be in either or both members, provided the basic groove configuration is not changed and adequate edge distance is maintained to support the welding operations without excessive edge melting.

(1) F = Flat, OH = Overhead, V = Vertical

## Figure I.1 (Continued)—Prequalified Complete Joint Penetration Groove Welded Joints



Copyright American Welding Society
Provided by IHS under license with AWS
No reproduction or networking permitted without license from IHS
Not for Resale

T- or Corner Joint (TC)
Unlimited (U)
Single-Bevel-Groove Weld (4)

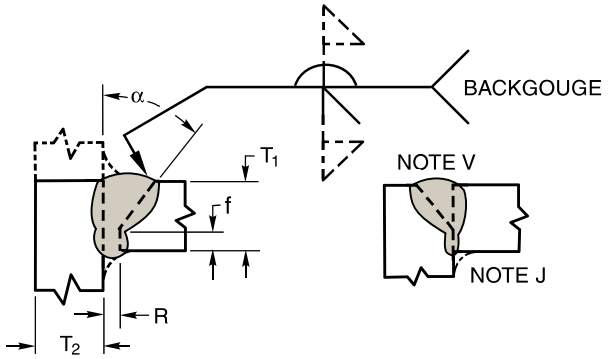


| Welding Process | Joint Designation | Base Metal Thickness, in. [mm] (U = Unlimited) | | Groove Preparation | | | Permitted Welding Positions | Gas Shielding for FCAW | Notes |
|---|---|---|---|---|---|---|---|---|---|
| | | | | Root Opening, Root Face, in. [mm] Groove Angle | Tolerances, in. [mm] for R & f; ° for α | | | | |
| | | $T_1$ | $T_2$ | | As Detailed (see 6.13) | As Fit Up (see 7.4.4) | | | |
| SMAW | TC-U4b | U | U | R = 0 to 1/8 [3]<br>f = 0 to 1/8 [3]<br>α = 45° | +1/16 [2], –0<br>+1/16 [2], –0<br>+10°, –0° | +1/16 [2], –1/8 [3]<br>Not Limited<br>+10°, –5° | All | — | C, J, V |
| GMAW<br>FCAW | TC-U4b-GF | U | U | | | | All | Not Required | A, C |
| SAW | TC-U4b-S | U | U | R = 0<br>f = 1/4 [6] max<br>α = 60° | ±0<br>+0, –1/8 [3]<br>+10°, –0° | +1/4 [6], –0<br>±1/16 [2]<br>+10°, –5° | Flat | — | C, J, V, Y |

**(M)**

T-Joint (T)
Corner Joint (C)
Unlimited (U)
Single-Bevel-Groove Weld (4)

| Tolerances, in. [mm] for R; ° for α | |
|---|---|
| As Detailed (see 6.13) | As Fit Up (see 7.4.4) |
| R = +1/16 [2], –0 | +1/4 [6], –1/16 [2] |
| α = +10°, –0° | +10°, –5° |

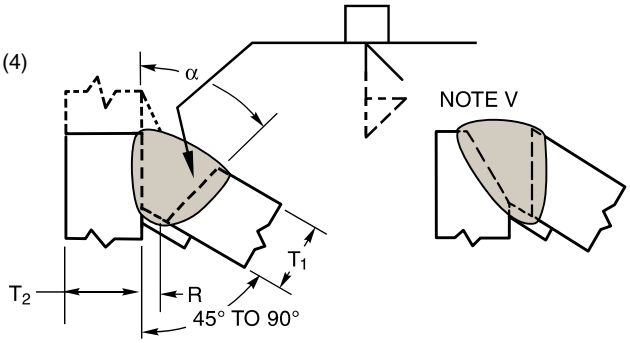


| Welding Process | Joint Designation | Base Metal Thickness, in. [mm] (U = Unlimited) | | Groove Preparation | | Permitted Welding Positions | Gas Shielding for FCAW | Notes |
|---|---|---|---|---|---|---|---|---|
| | | $T_1$ | $T_2$ | Root Opening, in. [mm] | Groove Angle | | | |
| SMAW | TC-U4d | U | U | R = 1/4 [6] | α = 45° | All | — | J, V |
| | | | | R = 3/8 [10] | α = 30° | F, V, OH(1) | — | |
| GMAW<br>FCAW | TC-U4d-GF | U | U | R = 3/16 [5] | α = 30° | All | Required | A, J, V |
| | | | | R = 3/8 [10] | α = 30° | Flat | Not Req. | |
| | | | | R = 1/4 [6] | α = 45° | All | Not Req. | |
| SAW | TC-U4d-S | U | U | R = 3/8 [10] | α = 30° | Flat | — | J, V |
| | | | | R = 1/4 [6] | α = 45° | | | |

**(N)**

Note A: Not prequalified for gas metal arc welding using short circuiting transfer.
Note C: Gouge root before welding second side.
Note J: If fillet welds are used in statically loaded structures to reinforce groove welds in corner and T-joints, they shall be equal to 1/4 $T_1$, but need not exceed 3/8 in. [10 mm]. Groove welds in corner and T-joints of cyclically loaded structures shall be reinforced with fillet welds equal to 1/4 $T_1$, but need not exceed 3/8 in. [10 mm].
Note V: For corner joints, the outside groove preparation may be in either or both members, provided the basic groove configuration is not changed and adequate edge distance is maintained to support the welding operations without excessive edge melting.
Note Y: Shielded metal arc or submerged arc backing fillet weld required.

(1) F = Flat, OH = Overhead, V = Vertical

**Figure I.1 (Continued)—Prequalified Complete Joint Penetration Groove Welded Joints**



Copyright American Welding Society
Provided by IHS under license with AWS
No reproduction or networking permitted without license from IHS
Not for Resale

T-Joint (T)
Corner Joint (C)
Unlimited (U)
Single-Bevel-Groove Weld (4)

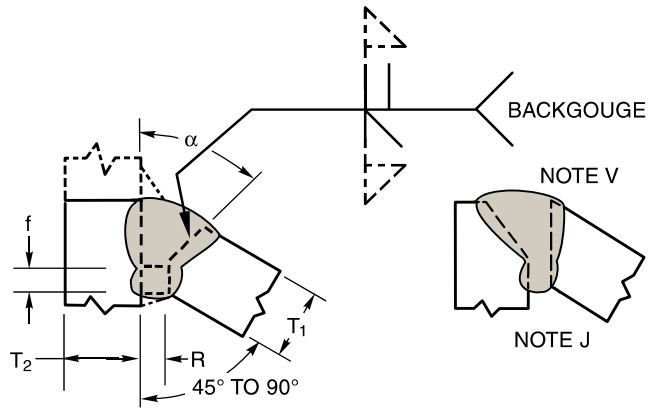


| Welding Process | Joint Designation | Base Metal Thickness, in. [mm] (U = Unlimited) | | Groove Preparation | | | Permitted Welding Positions | Gas Shielding for FCAW | Notes |
|---|---|---|---|---|---|---|---|---|---|
| | | | | Root Opening Root Face, in. [mm] Groove Angle | Tolerances, in. [mm] for R & f; ° for α | | | | |
| | | $T_1$ | $T_2$ | | As Detailed (see 6.13) | As Fit Up (see 7.4.4) | | | |
| SMAW | TC-U4c | U | U | R = 0 to 1/8 [3]<br>f = 0 to 1/8 [3]<br>α = 45° | +1/16 [2], –0<br>+1/16 [2], –0<br>+10°, –0° | +1/16 [2], –1/8 [3]<br>Not Limited<br>+10°, –5° | All | — | C,J, V |
| GMAW<br>FCAW | TC-U4c-GF | U | U | | | | All | Not Required | A, C, J, V |
| SAW | TC-L4c-S | U | U | R = 0<br>f = 1/4 [6] max<br>α = 60° | ±0<br>+0, –1/8 [3]<br>+10°, –0° | +1/4 [6], –0<br>±1/16 [2]<br>+10°, –5° | Flat | — | C, J, V, Y |

**(O)**

Butt Joint (B)
T-Joint (T)
Corner Joint (C)
Unlimited (U)
Single-Bevel-Groove Weld (4)

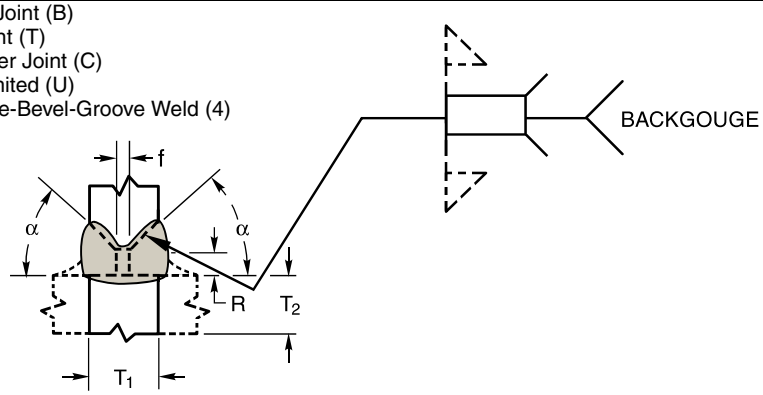


| Tolerances, in. [mm] for R, f, & Spacer; ° for α | |
|---|---|
| As Detailed (see 6.13) | As Fit Up (see 7.4.4) |
| R = ±0 | +1/4 [6], –0 |
| f = +1/16 [2], –0 | ±1/16 [2] |
| α = +10°, –0° | +10°, –5° |
| Spacer = +1/16 [2], –0 | +1/8 [3], –0 |

Spacer same steel as base metal.

| Welding Process | Joint Designation | Base Metal Thickness, in. [mm] (U = Unlimited) | | Groove Preparation | | | Permitted Welding Positions | Gas Shielding for FCAW | Notes |
|---|---|---|---|---|---|---|---|---|---|
| | | $T_1$ | $T_2$ | Root Opening, in. [mm] | Root Face, in. [mm] | Groove Angle | | | |
| SMAW | B-U5b | U, preferably 5/8 [16] or thicker<br>Spacer = 1/8R | — | R = 1/4 [6] | f = 0 to 1/8 [3] | α = 45° | All | — | C, M |
| | TC-U5a | | U | R = 1/4 [6] | f = 0 to 1/8 [3] | α = 45° | All | — | C, J, M, V |
| | | | | R = 3/8 [10] | f = 0 to 1/8 [3] | α = 30° | Flat & Overhead | — | C, J, M, V |

**(P)**

Note A: Not prequalified for gas metal arc welding using short circuiting transfer.
Note C: Gouge root before welding second side.
Note J: If fillet welds are used in statically loaded structures to reinforce groove welds in corner and T-joints, they shall be equal to 1/4 $T_1$, but need not exceed 3/8 in. [10 mm]. Groove welds in corner and T-joints of cyclically loaded structures shall be reinforced with fillet welds equal to 1/4 $T_1$, but need not exceed 3/8 in. [10 mm].
Note M: Double-groove welds may have grooves of unequal depth, but the depth of the shallower groove shall be no less than one-fourth of the thickness of the thinner part joined.
Note V: For corner joints, the outside groove preparation may be in either or both members, provided the basic groove configuration is not changed and adequate edge distance is maintained to support the welding operations without excessive edge melting.
Note Y: Shielded metal arc or submerged arc backing weld required.

**Figure I.1 (Continued)—Prequalified Complete Joint Penetration Groove Welded Joints**



Copyright American Welding Society
Provided by IHS under license with AWS
No reproduction or networking permitted without license from IHS
Not for Resale

Butt Joint (B)
Unlimited (U)
Double-Bevel-Groove Weld (5)

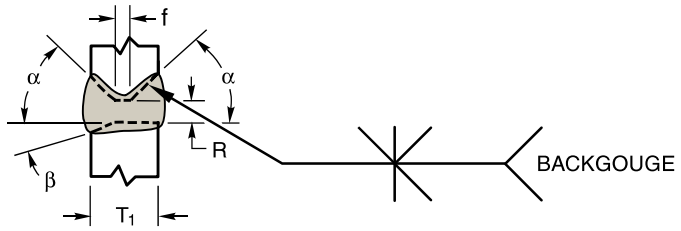


| Welding Process | Joint Designation | Base Metal Thickness, in. [mm] (U = Unlimited) | | Groove Preparation | | | Permitted Welding Positions | Gas Shielding for FCAW | Notes |
|---|---|---|---|---|---|---|---|---|---|
| | | | | Root Opening Root Face, in. [mm] Groove Angle | Tolerances, in. [mm] for R & f; ° for α & β | | | | |
| | | $T_1$ | $T_2$ | | As Detailed (see 6.13) | As Fit Up (see 7.4.4) | | | |
| SMAW | B-U5a | U, preferably 5/8 [16] or thicker | — | R = 0 to 1/8 [3]<br>f = 0 to 1/8 [3]<br>α = 45°<br>β = 0° to 15° | +1/16 [2], –0<br>+1/16 [2], –0<br>$\alpha + \beta^{+10°}_{-0°}$ | +1/16 [2], –1/8 [3]<br>Not Limited<br>$\alpha + \beta^{+10°}_{-5°}$ | All | — | C, M, Z |
| GMAW<br>FCAW | B-U5-GF | U, preferably 5/8 [16] or thicker | — | R = 0 to 1/8 [3]<br>f = 0 to 1/8 [3]<br>α = 45°<br>β = 0° to 15° | +1/16 [2], –0<br>+1/16 [2], –0<br>$\alpha + \beta^{+10°}_{-0°}$ | +1/16 [2], –0<br>+1/16 [2], –0<br>$\alpha + \beta^{+10°}_{-0°}$ | All | Not Required | A, C, M |

**(Q)**

T- or Corner Joint (TC)
Unlimited (U)
Double-Bevel-Groove Weld (5)

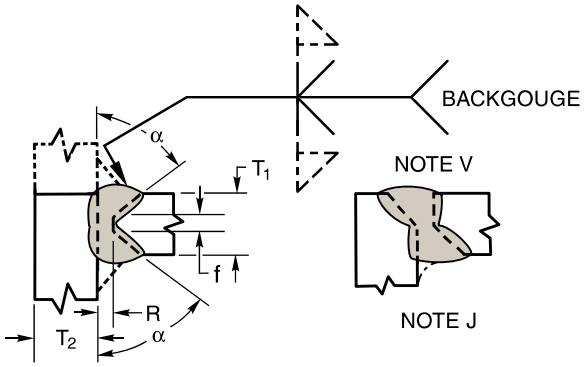


| Welding Process | Joint Designation | Base Metal Thickness, in. [mm] (U = Unlimited) | | Groove Preparation | | | Permitted Welding Positions | Gas Shielding for FCAW | Notes |
|---|---|---|---|---|---|---|---|---|---|
| | | | | Root Opening Root Face, in. [mm] Groove Angle | Tolerances, in. [mm] for R & f; ° for α | | | | |
| | | $T_1$ | $T_2$ | | As Detailed (see 6.13) | As Fit Up (see 7.4.4) | | | |
| SMAW | TC-U5b | U | U | R = 0 to 1/8 [3]<br>f = 0 to 1/8 [3]<br>α = 45° | +1/16 [2], –0<br>+1/16 [2], –0<br>+ 10°, –0° | +1/16 [2], –1/8 [3]<br>Not Limited<br>+10°, –5° | All | — | C, J, M, V |
| GMAW<br>FCAW | TC-U5-GF | U | U | | | | All | Not Required | A, C, J, M, V |
| SAW | TC-U5-S | U | U | R = 0<br>f = 3/16 [5] max<br>α = 60° | ±0<br>+0, –3/16 [5]<br>+10°, –0° | +1/16 [2], –0<br>±1/16 [2]<br>+10°, –5° | Flat | — | C, J, M, V |

**(R)**

Note A: Not prequalified for gas metal arc welding using short circuiting transfer.
Note C: Gouge root before welding other side.
Note J: If fillet welds are used in statically loaded structures to reinforce groove welds in corner and T-joints, they shall be equal to 1/4 $T_1$, but need not exceed 3/8 in. [10 mm]. Groove welds in corner and T-joints of cyclically loaded structures shall be reinforced with fillet welds equal to 1/4 $T_1$, but need not exceed 3/8 in. [10 mm].
Note M: Double-groove welds may have grooves of unequal depth, but the depth of the shallower groove shall be no less than one-fourth of the thickness of the thinner part joined.
Note V: For corner joints, the outside groove preparation may be in either or both members, provided the basic groove configuration is not changed and adequate edge distance is maintained to support the welding operations without excessive edge melting.
Note Z: When lower plate is beveled, make the first root pass on this side.

**Figure I.1 (Continued)—Prequalified Complete Joint Penetration Groove Welded Joints**



Copyright American Welding Society
Provided by IHS under license with AWS
No reproduction or networking permitted without license from IHS
Not for Resale

T-Joint (T)
Corner Joint (C)
Unlimited (U)
Double-Bevel-Groove Weld (5)

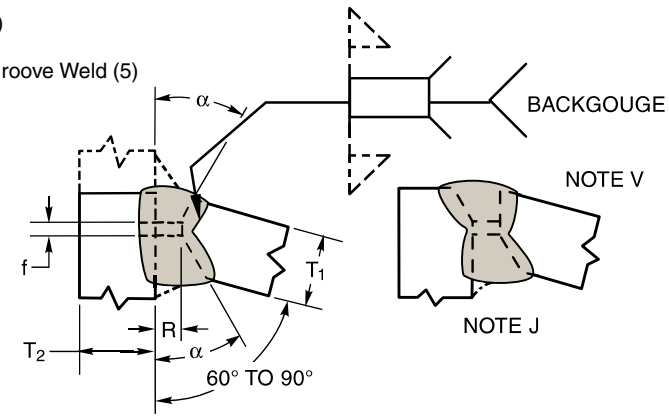


| Tolerances, in. [mm] for R, f, & Spacer; ° for α | |
|---|---|
| As Detailed (see 6.13) | As Fit Up (see 7.4.4) |
| R = ±0 | +1/4 [6], –0 |
| f = +1/16 [2], –0 | ±1/16 [2] |
| α = +10°, –0° | +10°, –5° |
| Spacer = +1/16 [2], –0 | +1/8 [3], –0 |

Spacer same steel as base metal.

| Welding Process | Joint Designation | Base Metal Thickness, in. [mm] (U = Unlimited) | | Groove Preparation | | | Permitted Welding Positions | Gas Shielding for FCAW | Notes |
|---|---|---|---|---|---|---|---|---|---|
| | | $T_1$ | $T_2$ | Root Opening in. [mm] | Root Face, in. [mm] | Groove Angle | | | |
| SMAW | TC-U5c | U(1) Spacer = 1/8R | U | R = 1/4 [6] | f = 0 to 1/8 [3] | α = 45° | All | — | C, J, M, V |
| | | | | R = 3/8 [10] | f = 0 to 1/8 [3] | α = 30° | Flat & Overhead | — | C, J, M, V |

**(S)**

T-Joint (T)
Corner Joint (C)
Unlimited (U)
Double-Bevel-Groove Weld (5)

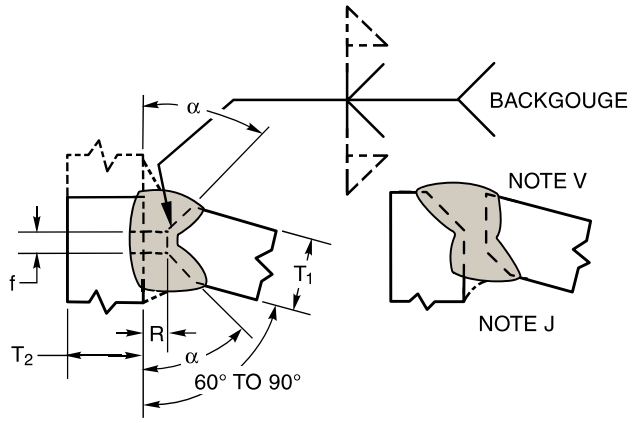


| Welding Process | Joint Designation | Base Metal Thickness, in. [mm] (U = Unlimited) | | Groove Preparation | | | Permitted Welding Positions | Gas Shielding for FCAW | Notes |
|---|---|---|---|---|---|---|---|---|---|
| | | | | Root Opening Root Face, in. [mm] Groove Angle | Tolerances, in. [mm] for R & f; ° for α | | | | |
| | | $T_1$ | $T_2$ | | As Detailed (see 6.13) | As Fit Up (see 7.4.4) | | | |
| SMAW | TC-U5d | U(1) | U | R = 0 to 1/8 [3]<br>f = 0 to 1/8 [3]<br>α = 45° | +1/16 [2], –0<br>+1/16 [2], –0<br>+10°, –0° | +1/16 [2], –1/8 [3]<br>Not Limited<br>+10°, –5° | All | — | C, J, M, V |

**(T)**

Note C: Gouge root before welding other side.

Note J: If fillet welds are used in statically loaded structures to reinforce groove welds in corner and T-joints, they shall be equal to 1/4 $T_1$, but need not exceed 3/8 in. [10 mm]. Groove welds in corner and T-joints of cyclically loaded structures shall be reinforced with fillet welds equal to 1/4 $T_1$, but need not exceed 3/8 in. [10 mm].

Note M: Double-groove welds may have grooves of unequal depth, but the depth of the shallower groove shall be no less than one-fourth of the thickness of the thinner part joined.

Note V: For corner joints, the outside groove preparation may be in either or both members, provided the basic groove configuration is not changed and adequate edge distance is maintained to support the welding operations without excessive edge melting.

(1) It is recommended that $T_1$ is 5/8 in. [16 mm] or thicker.

## Figure I.1 (Continued)—Prequalified Complete Joint Penetration Groove Welded Joints



Copyright American Welding Society
Provided by IHS under license with AWS
No reproduction or networking permitted without license from IHS
Not for Resale

Butt Joint (B)
Corner Joint (C)
Unlimited (U)
Single-U-Groove Weld (6)

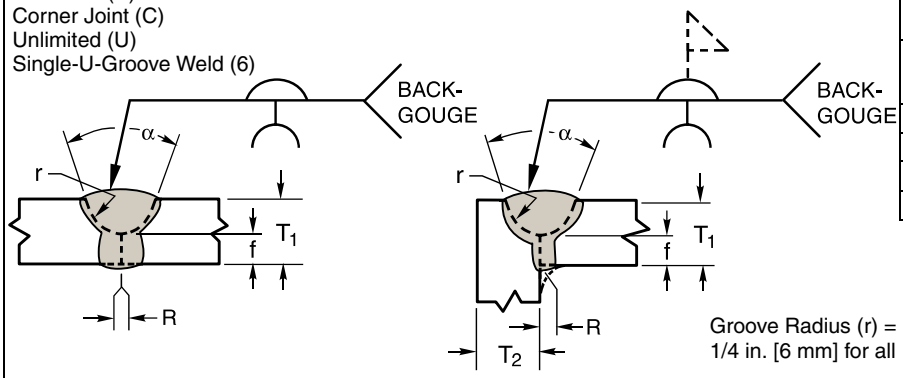


| Tolerances, in. [mm] for R, f, & r; ° for α | |
|---|---|
| As Detailed (see 6.13) | As Fit Up (see 7.4.4) |
| R = +1/16 [2], –0 | +1/16 [2], –1/8 [3] |
| f = ±1/16 [2] | Not Limited |
| α = +10°, –0° | +10°, –5° |
| r = +1/8 [3], –0 | +1/8 [3], –0 |

| Welding Process | Joint Designation | Base Metal Thickness, in. [mm] (U = Unlimited) | | Groove Preparation | | | Permitted Welding Positions | Gas Shielding for FCAW | Notes |
|---|---|---|---|---|---|---|---|---|---|
| | | $T_1$ | $T_2$ | Root Opening, in. [mm] | Root Face, in. [mm] | Groove Angle | | | |
| SMAW | B-U6 | U | U | R = 0 to 1/8 [3] | f = 1/8 [3] | α = 45° | All | — | C |
| | | | | R = 0 to 1/8 [3] | f = 1/8 [3] | α = 20° | F, OH(1) | — | C |
| | C-U6 | U | U | R = 0 to 1/8 [3] | f = 1/8 [3] | α = 45° | All | — | C, J |
| | | | | R = 0 to 1/8 [3] | f = 1/8 [3] | α = 20° | F, OH(1) | — | C, J |
| GMAW FCAW | B-U6-GF | U | U | R = 0 to 1/8 [3] | f = 1/8 [3] | α = 20° | All | Not Req. | C, M |
| | C-U6-GF | U | U | R = 0 to 1/8 [3] | f = 1/8 [3] | α = 20° | All | Not Req. | A, C, J |

**(U)**

Butt-Joint (B)
Unlimited (U)
Double-U-Groove Weld (7)

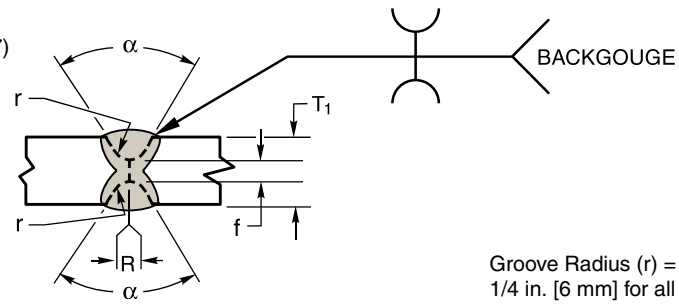


| Tolerances, in. [mm] for R, f, & r; ° for α | |
|---|---|
| As Detailed (see 6.13) | As Fit Up (see 7.4.4) |
| For B-U7 and B-U7-GF | |
| R = +1/16 [2], –0 | +1/16 [2], –1/8 [3] |
| f = ±1/16 [2], –0 | Not Limited |
| α = +10°, –0° | +10°, –5° |
| r = +1/4 [6], –0 | ±1/16 [2] |
| For B-U7-S | |
| R = ±0 | +1/16 [2], –0 |
| f = +0, –1/4 [6] | ±1/16 [2] |

| Welding Process | Joint Designation | Base Metal Thickness, in. [mm] (U = Unlimited) | | Groove Preparation | | | Permitted Welding Positions | Gas Shielding for FCAW | Notes |
|---|---|---|---|---|---|---|---|---|---|
| | | $T_1$ | $T_2$ | Root Opening, in. [mm] | Root Face, in. [mm] | Groove Angle | | | |
| SMAW | B-U7 | U | — | R = 0 to 1/8 [3] | f = 1/8 [3] | α = 45° | All | — | C, M, |
| | | | | R = 0 to 1/8 [3] | f = 1/8 [3] | α = 20° | F, OH(1) | — | C, M |
| GMAW FCAW | B-U7-GF | U | — | R = 0 to 1/8 [3] | f = 1/8 [3] | α = 20° | All | Not Required | A, C, M |
| SAW | B-U7-S | U | — | R = 0 | f = 1/4 [6] max | α = 20° | Flat | — | C, M |

**(V)**

Note A: Not prequalified for gas metal arc welding using short circuiting transfer.
Note C: Gouge root before welding other side.
Note J: If fillet welds are used in statically loaded structures to reinforce groove welds in corner and T-joints, they shall be equal to 1/4 $T_1$, but need not exceed 3/8 in. [10 mm]. Groove welds in corner and T-joints of cyclically loaded structures shall be reinforced with fillet welds equal to 1/4 $T_1$, but need not exceed 3/8 in. [10 mm].
Note M: Double-groove welds may have grooves of unequal depth, but the depth of the shallower groove shall be no less than one-fourth of the thickness of the thinner part joined.

(1) F = Flat, OH = Overhead

## Figure I.1 (Continued)—Prequalified Complete Joint Penetration Groove Welded Joints



Copyright American Welding Society
Provided by IHS under license with AWS
No reproduction or networking permitted without license from IHS
Not for Resale

Butt Joint (B)
Unlimited (U)
Single-J-Groove Weld (8)

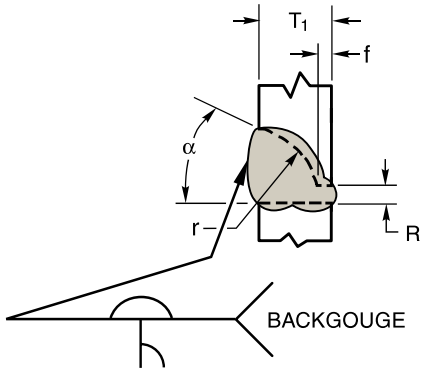


Groove Radius (r) = 3/8 in. [10 mm] for all

| Tolerances, in. [mm] for R, f, & r; ° for α | |
|---|---|
| As Detailed (see 6.13) | As Fit Up (see 7.4.4) |
| R = +1/16 [2], –0 | +1/16 [2], –1/8 [3] |
| f = +1/16 [2], –0 | Not Limited |
| α = +10°, –0° | +10°, –5° |
| r = +1/4 [6], –0 | ±1/16 [2] |

| Welding Process | Joint Designation | Base Metal Thickness, in. [mm] (U = Unlimited) | | Groove Preparation | | | Permitted Welding Positions | Gas Shielding for FCAW | Notes |
|---|---|---|---|---|---|---|---|---|---|
| | | $T_1$ | $T_2$ | Root Opening, in. [mm] | Root Face, in. [mm] | Groove Angle | | | |
| SMAW | B-U8 | U | — | R = 0 to 1/8 [3] | f = 1/8 [3] | α = 45° | All | — | C |
| GMAW FCAW | B-U8-GF | U | — | R = 0 to 1/8 [3] | f = 1/8 [3] | α = 45° | All | Not Req. | A, C |

**(W)**

T-Joint (T)
Corner Joint (C)
Unlimited (U)
Single-J-Groove Weld (8)

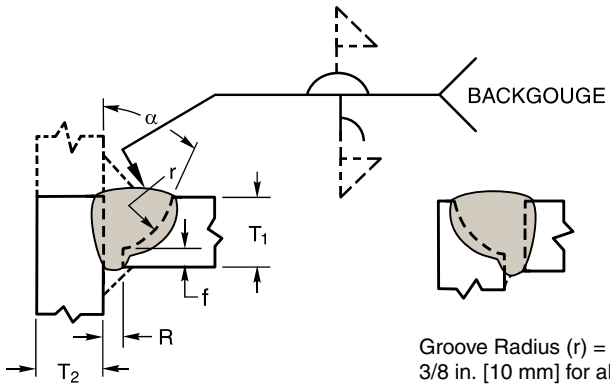


Groove Radius (r) = 3/8 in. [10 mm] for all

| Tolerances, in. [mm] for R, f, & r; ° for α | |
|---|---|
| As Detailed (see 6.13) | As Fit Up (see 7.4.4) |
| R = +1/16 [2], –0 | +1/16 [2], –1/8 [3] |
| f = +1/16 [2], –0 | Not Limited |
| α = +10°, –0° | +10°, –5° |
| r = +1/4 [6], –0 | ±1/16 [2] |

| Welding Process | Joint Designation | Base Metal Thickness, in. [mm] (U = Unlimited) | | Groove Preparation | | | Permitted Welding Positions | Gas Shielding for FCAW | Notes |
|---|---|---|---|---|---|---|---|---|---|
| | | $T_1$ | $T_2$ | Root Opening, in. [mm] | Root Face, in. [mm] | Groove Angle | | | |
| SMAW | TC-U8a | U | U | R = 0 to 1/8 [3] | α = 45° | f = 1/8 [3] | All | — | C, J, V |
| | | | | R = 0 to 1/8 [3] | α = 30° | f = 1/8 [3] | F, OH(1) | — | C, J, V |
| GMAW FCAW | TC-U8a-GF | U | U | R = 0 to 1/8 [3] | α = 30° | f = 1/8 [3] | All | Not Required | A, C, J, V |

**(X)**

Note A: Not prequalified for gas metal arc welding using short circuiting transfer.
Note C: Gouge root before welding other side.
Note J: If fillet welds are used in statically loaded structures to reinforce groove welds in corner and T-joints, they shall be equal to 1/4 $T_1$, but need not exceed 3/8 in. [10 mm]. Groove welds in corner and T-joints of cyclically loaded structures shall be reinforced with fillet welds equal to 1/4 $T_1$, but need not exceed 3/8 in. [10 mm].
Note V: For corner joints, the outside groove preparation may be in either or both members, provided the basic groove configuration is not changed and adequate edge distance is maintained to support the welding operations without excessive edge melting.

*F = Flat, OH = Overhead

## Figure I.1 (Continued)—Prequalified Complete Joint Penetration Groove Welded Joints



Copyright American Welding Society
Provided by IHS under license with AWS
No reproduction or networking permitted without license from IHS
Not for Resale

T-Joint (T)
Corner Joint (C)
Unlimited (U)
Single-J-Groove Weld (8)

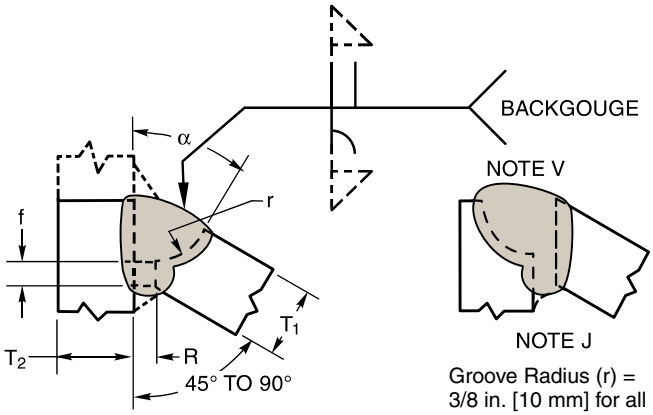


Groove Radius (r) = 3/8 in. [10 mm] for all

| Tolerances, in. [mm] for R, f, & r; ° for α | |
|---|---|
| As Detailed (see 6.13) | As Fit Up (see 7.4.4) |
| R = +1/16 [2], –0 | +1/16 [2], –1/8 [3] |
| f = +1/16 [2], –0 | Not Limited |
| α = +10°, –0° | +10°, –5° |
| r = +1/4 [6], –0 | ±1/16 [2] |

| Welding Process | Joint Designation | Base Metal Thickness, in. [mm] (U = Unlimited) | | Groove Preparation | | | Permitted Welding Positions | Gas Shielding for FCAW | Notes |
|---|---|---|---|---|---|---|---|---|---|
| | | $T_1$ | $T_2$ | Root Opening, in. [mm] | Root Face, in. [mm] | Groove Angle | | | |
| SMAW | TC-U8b | U | U | R = 0 to 1/8 [3] | f = 1/8 [3] | α = 45° | All | — | C, J, V |
| | | | | R = 0 to 1/8 [3] | f = 1/8 [3] | α = 30° | F, OH(1) | — | C, J, V |
| GMAW FCAW | TC-Ub8-GF | U | U | R = 0 to 1/8 [3] | f = 1/8 [3] | α = 30° | All | Not Required | A, C, J, V |

**(Y)**
(1) F = Flat, OH = Overhead

Butt Joint (B)
Unlimited (U)
Double-J-Groove Weld (9)

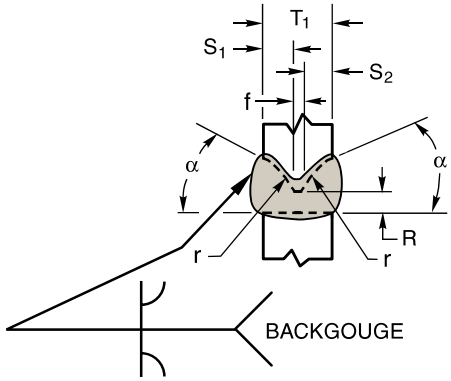


Groove Radius (r) = 3/8 in. [10 mm] for all

| Tolerances, in. [mm] for R, f, & r; ° for α | |
|---|---|
| As Detailed (see 6.13) | As Fit Up (see 7.4.4) |
| R = +1/16 [2], –0 | +1/16 [2], –1/8 [3] |
| f = +1/16 [2], –0 | Not Limited |
| α = +10°, –0° | +10°, –5° |
| r = +1/4 [3], –0 | ±1/16 [2] |

| Welding Process | Joint Designation | Base Metal Thickness, in. [mm] (U = Unlimited) | | Groove Preparation | | | Permitted Welding Positions | Gas Shielding for FCAW | Notes |
|---|---|---|---|---|---|---|---|---|---|
| | | $T_1$ | $T_2$ | Root Opening, in. [mm] | Root Face, in. [mm] | Groove Angle | | | |
| SMAW | B-U9 | U(1) | — | R = 0 to 1/8 [3] | f = 1/8 [3] | α = 45° | All | — | C, M |
| GMAW FCAW | B-U9-GF | U(1) | — | R = 0 to 1/8 [3] | f = 1/8 [3] | α = 30° | All | Not Required | A, C, M |

**(Z1)**

Note A: Not prequalified for gas metal arc welding using short circuiting transfer.
Note C: Gouge root before welding second side.
Note J: If fillet welds are used in statically loaded structures to reinforce groove welds in corner and T-joints, they shall be equal to 1/4 $T_1$, but need not exceed 3/8 in. [10 mm]. Groove welds in corner and T-joints of cyclically loaded structures shall be reinforced with fillet welds equal to 1/4 $T_1$, but need not exceed 3/8 in. [10 mm].
Note M: Double-groove welds may have grooves of unequal depth, but the depth of the shallower groove shall be no less than one-fourth of the thickness of the thinner part joined.
Note V: For corner joints, the outside groove preparation may be in either or both members, provided the basic groove configuration is not changed and adequate edge distance is maintained to support the welding operations without excessive edge melting.

(1) It is recommended that $T_1$ is 5/8 in. [16 mm] or thicker.

## Figure I.1 (Continued)—Prequalified Complete Joint Penetration Groove Welded Joints



Copyright American Welding Society
Provided by IHS under license with AWS
No reproduction or networking permitted without license from IHS
Not for Resale

T-Joint (T)
Corner Joint (C)
Unlimited (U)
Double-J-Groove Weld (9)

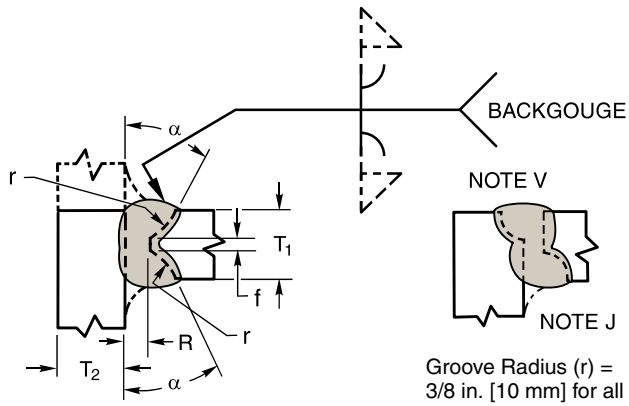


| Tolerances, in. [mm] for R, f, & r; ° for α | |
|---|---|
| As Detailed (see 6.13) | As Fit Up (see 7.4.4) |
| R = +1/16 [2], –0 | +1/16 [2], –1/8 [3] |
| f = +1/16 [2], –0 | Not Limited |
| α = +10°, –0° | +10°, –5° |
| r = +1/8 [3], –0 | ±1/16 [2] |

| Welding Process | Joint Designation | Base Metal Thickness, in. [mm] (U = Unlimited) | | Groove Preparation | | | Permitted Welding Positions | Gas Shielding for FCAW | Notes |
|---|---|---|---|---|---|---|---|---|---|
| | | $T_1$ | $T_2$ | Root Opening in. [mm] | Root Face, in. [mm] | Groove Angle | | | |
| SMAW | TC-U9a | U(1) | U | R = 0 to 1/8 [3] | f = 1/8 [3] | α = 45° | All | — | C, J, M, V |
| | | | | R = 0 to 1/8 [3] | f = 1/8 [3] | α = 30° | Flat & Overhead | — | C, J, M, V |
| GMAW FCAW | TC-U9a-GF | U(1) | U | R = 0 to 1/8 [3] | f = 1/8 [3] | α = 30° | All | Not Required | A, C, J, M, V |

**(Z2)**

T-Joint (T)
Corner Joint (C)
Unlimited (U)
Double-J-Groove Weld (9)

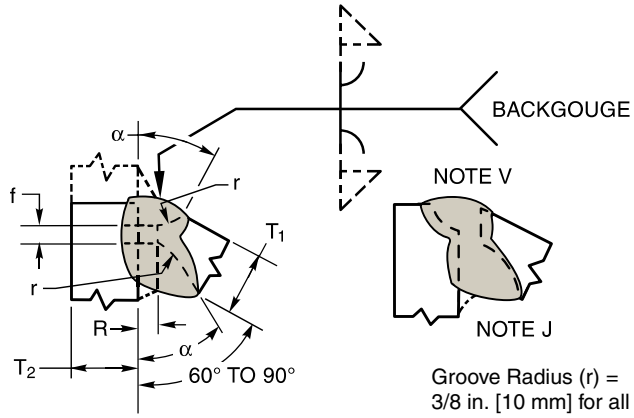


| Tolerances, in. [mm] for R, f, & r; ° for α | |
|---|---|
| As Detailed (see 6.13) | As Fit Up (see 7.4.4) |
| R = +1/16 [2], –0 | +1/16 [2], –1/8 [3] |
| f = +1/16 [2], –0 | Not Limited |
| α = +10°, –0° | +10°, –5° |
| r = +1/8 [6], –0 | ±1/16 [2] |

| Welding Process | Joint Designation | Base Metal Thickness, in. [mm] (U = Unlimited) | | Groove Preparation | | | Permitted Welding Positions | Gas Shielding for FCAW | Notes |
|---|---|---|---|---|---|---|---|---|---|
| | | $T_1$ | $T_2$ | Root Opening in. [mm] | Root Face, in. [mm] | Groove Angle | | | |
| SMAW | TC-U9b | U(1) | U | R = 0 to 1/8 [3] | f = 1/8 [3] | α = 45° | All | — | C, J, M, V |
| | | | | R = 0 to 1/8 [3] | f = 1/8 [3] | α = 30° | Flat & Overhead | — | C, J, M, V |
| GMAW FCAW | TC-U9b-GF | U(1) | U | R = 0 to 1/8 [3] | f = 1/8 [3] | α = 30° | All | Not Required | A, C, J, M, V |

**(Z3)**

Note A: Not prequalified for gas metal arc welding using short circuiting transfer.
Note C: Gouge root before welding other side.
Note J: If fillet welds are used in statically loaded structures to reinforce groove welds in corner and T-joints, they shall be equal to 1/4 $T_1$, but need not exceed 3/8 in. [10 mm]. Groove welds in corner and T-joints of cyclically loaded structures shall be reinforced with fillet welds equal to 1/4 $T_1$, but need not exceed 3/8 in. [10 mm].
Note M: Double-groove welds may have grooves of unequal depth, but the depth of the shallower groove shall be no less than one-fourth of the thickness of the thinner part joined.
Note V: For corner joints, the outside groove preparation may be in either or both members, provided the basic groove configuration is not changed and adequate edge distance is maintained to support the welding operations without excessive edge melting.

(1) It is recommended that $T_1$ is 5/8 in. [16 mm] or thicker.

**Figure I.1 (Continued)—Prequalified Complete Joint Penetration Groove Welded Joints**



Copyright American Welding Society
Provided by IHS under license with AWS
No reproduction or networking permitted without license from IHS
Not for Resale

Butt Joint (B)
Partial Penetration (P)
Square-Groove Weld (1)

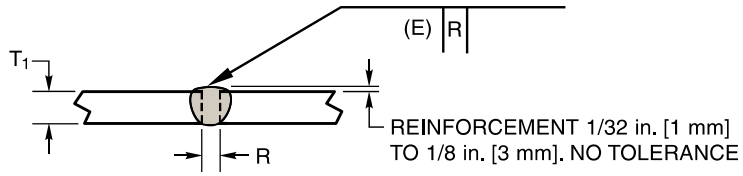


| Welding Process | Joint Designation | Base Metal Thickness, in. [mm] (U = Unlimited) | | Groove Preparation | | | Permitted Welding Positions | Effective Throat (E), in. [mm] | Notes |
|---|---|---|---|---|---|---|---|---|---|
| | | | | | Tolerances, in. [mm] | | | | |
| | | $T_1$ | $T_2$ | Root Opening, in. [mm] | As Detailed (see 6.13) | As Fit Up (see 7.4.4) | | | |
| SMAW | B-P1a | 1/8 [3] | — | R = 0 to 1/16 [2] | +1/16 [2], –0 | ±1/16 [2] | All | $T_1$ – 1/32 [1] | B |
| | B-P1c | 1/4 [6] max | — | $R = \frac{T_1}{2}$ minimum | +1/16 [2], –0 | ±1/16 [2] | All | $\frac{T_1}{2}$ | B, E |

**(A)**

Butt Joint (B)
Partial Penetration (P)
Square-Groove Weld (1)

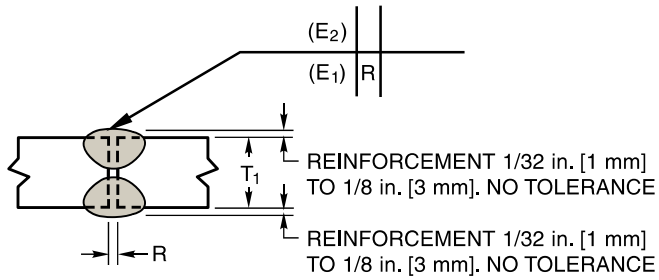


| Welding Process | Joint Designation | Base Metal Thickness, in. [mm] (U = Unlimited) | | Groove Preparation | | | Permitted Welding Positions | Effective Throat (E), in. [mm] | Notes |
|---|---|---|---|---|---|---|---|---|---|
| | | | | | Tolerances, in. [mm] | | | | |
| | | $T_1$ | $T_2$ | Root Opening, in. [mm] | As Detailed (see 6.13) | As Fit Up (see 7.4.4) | | | |
| SMAW | B-P1b | 1/4 [6] max | — | $R = \frac{T_1}{2}$ minimum | +1/16 [2], –0 | ±1/16 [2] | All | $\frac{3T_1}{4}$ | C2, E |

**(B)**

Note B: Joints welded from one side.
Note C2: Root need not be gouged before welding other side.
Note E: Minimum effective throat as stated in Table 5.

**Figure I.2—Prequalified Partial Joint Penetration Groove Welded Joints**



Copyright American Welding Society
Provided by IHS under license with AWS
No reproduction or networking permitted without license from IHS
Not for Resale

Butt Joint (B)
Corner Joint (C)
Partial Penetration (P)
Single-V-Groove Weld (2)

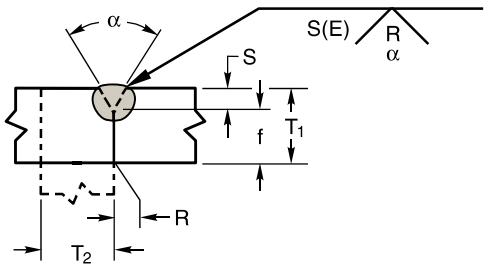


| Welding Process | Joint Designation | Base Metal Thickness, in. [mm] (U = Unlimited) | | Groove Preparation | | | Permitted Welding Positions | Effective Throat (E), in. [mm] | Notes |
|---|---|---|---|---|---|---|---|---|---|
| | | | | Root Opening Root Face, in. [mm] Groove Angle | Tolerances, in. [mm] for R & f; ° for α | | | | |
| | | $T_1$ | $T_2$ | | As Detailed (see 6.13) | As Fit Up (see 7.4.4) | | | |
| SMAW | BC-P2 | 1/4 [6] min | U | R = 0<br>f = 1/32 [1] min<br>α = 60° | +1/16 [2], –0<br>+U, –0<br>+10°, –0° | +1/8 [3], –1/16 [2]<br>±1/16 [2]<br>+10°, –5° | All | S | B, E |
| GMAW<br>FCAW | BC-P2-GF | 1/4 [6] min | U | R = 0<br>f = 1/8 [3] min<br>α = 60° | +1/16 [2], –0<br>+U, –0<br>+10°, –0° | +1/8 [3], –1/16 [2]<br>±1/16 [2]<br>+10°, –5° | All | S | A, B, E |
| SAW | BC-P2-S | 7/16 [11] min | U | R = 0<br>f = 1/4 [6] min<br>α = 60° | +1/16 [2], –0<br>+U, –0<br>+10°, –0° | +1/8 [3], –1/16 [2]<br>±1/16 [2]<br>+10°, –5° | Flat | S | B, E |

**(C)**

Note A: Not prequalified for gas metal arc welding using short circuiting transfer.
Note B: Joint is welded from one side only.
Note E: Minimum effective throat as shown in Table 5.

**Figure I.2 (Continued)—Prequalified Partial Joint Penetration Groove Welded Joints**



Copyright American Welding Society
Provided by IHS under license with AWS
No reproduction or networking permitted without license from IHS
Not for Resale

Butt Joint (B)
Partial Penetration (P)
Double-V-Groove Weld (3)

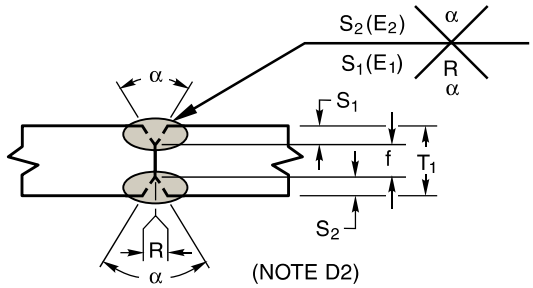


| Welding Process | Joint Designation | Base Metal Thickness, in. [mm] (U = Unlimited) | | Groove Preparation | | | Permitted Welding Positions | Effective Throat (E), in. [mm] | Notes |
|---|---|---|---|---|---|---|---|---|---|
| | | | | Root Opening Root Face, in. [mm] Groove Angle | Tolerances, in. [mm] for R & f; ° for α | | | | |
| | | $T_1$ | $T_2$ | | As Detailed (see 6.13) | As Fit Up (see 7.4.4) | | | |
| SMAW | B-P3 | 1/2 [13] min | — | R = 0<br>f = 1/8 [3] min<br>α = 60° | +1/16 [2], –0<br>+U, –0<br>+10°, –0° | +1/8 [3], –1/16 [2]<br>±1/16 [2]<br>+10°, –5° | All | S | E, Mp, D2 |
| GMAW<br>FCAW | B-P3-GF | 1/2 [13] min | — | R = 0<br>f = 1/8 [3] min<br>α = 60° | +1/16 [2], –0<br>+U, –0<br>+10°, –0° | +1/8 [3], –1/16 [2]<br>±1/16 [2]<br>+10°, –5° | All | S | A, E, Mp, D2 |
| SAW | B-P3-S | 3/4 [20] min | — | R = 0<br>f = 1/4 [6] min<br>α = 60° | +1/16 [2], –0<br>+U, –0<br>+10°, –0° | +1/16 [2], –0<br>±1/16 [2]<br>+10°, –5° | Flat | S | E, Mp, D2 |

**(D)**

Note A: Not prequalified for gas metal arc welding using short circuiting transfer.

Note D2: The parts to be joined by partial joint penetration groove welds parallel to the length of the member, bearing joints excepted, shall be brought into as close contact as practicable. The gap between parts shall not exceed 3/16 in. [5 mm]) except in cases involving rolled shapes or plates 3 in. [75 mm] or greater in thickness if, after straightening and in assembly, the gap cannot be closed sufficiently to meet this tolerance. In such cases, a maximum gap of 5/16 in. [8 mm] is applicable provided a sealing weld or suitable backing material is used to prevent melt-through and the final weld meets the requirements for effective throat. Tolerances for bearing joints shall be in accordance with the applicable contract specifications.

Note E: Minimum effective throat as shown in Table 5.

Note Mp: Double-groove welds may have grooves of unequal depth, provided these conform to Note E. Also, the effective throat ($E_1$ or $E_2$), less any reduction, applies individually to each groove.

## Figure I.2 (Continued)—Prequalified Partial Joint Penetration Groove Welded Joints



Copyright American Welding Society
Provided by IHS under license with AWS
No reproduction or networking permitted without license from IHS
Not for Resale

Butt, T-, or Corner Joint (BTC)
Partial Penetration (P)
Single-Bevel-Groove Weld (4)

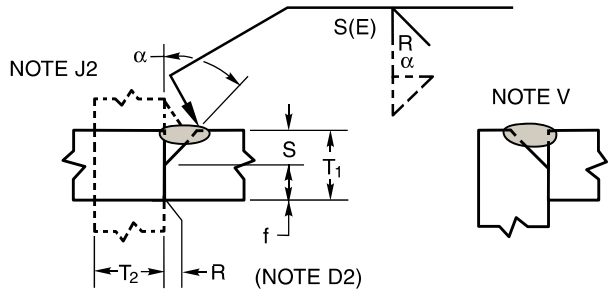


| Welding Process | Joint Designation | Base Metal Thickness, in. [mm] (U = Unlimited) | | Groove Preparation | | | Permitted Welding Positions | Effective Throat (E), in. [mm] | Notes |
|---|---|---|---|---|---|---|---|---|---|
| | | | | Root Opening Root Face, in. [mm] Groove Angle | Tolerances, in. [mm] for R & f; ° for α | | | | |
| | | $T_1$ | $T_2$ | | As Detailed (see 6.13) | As Fit Up (see 7.4.4) | | | |
| SMAW | BTC-P4 | U | U | R = 0<br>f = 1/8 [3] min<br>α = 45° | +1/16 [2], –0<br>U<br>+10°, –0° | +1/8 [3], –1/16 [2]<br>±1/16 [2]<br>+10°, –5° | All | S | E, V, J2, D2 |
| GMAW<br>FCAW | BTC-P4-GF | 1/4 [6] min | U | R = 0<br>f = 1/8 [3] min<br>α = 45° | +1/16 [2], –0<br>U(1)<br>+10°, –0° | +1/8 [3], –1/16 [2]<br>±1/16 [2]<br>+10°, –5° | Flat & Horizontal | S | A, E, V, J2, D2 |
| | | | | | | | Vertical & Overhead | S–1/8 [3] | |
| SAW | TC-P4-S | 7/16 [11] min | U | R = 0<br>f = 1/4 [6] min<br>α = 60° | +1/16 [2], –0<br>+U, –0<br>+10°, –0° | +1/16 [2], –0<br>±1/16 [2]<br>+10°, –5° | Flat | S | E, V, J2, D2 |

**(E)**

Note A: Not prequalified for gas metal arc welding using short circuiting transfer.

Note D2: The parts to be joined by partial joint penetration groove welds parallel to the length of the member, bearing joints excepted, shall be brought into as close contact as practicable. The gap between parts shall not exceed 3/16 in. [5 mm]) except in cases involving rolled shapes or plates 3 in. [75 mm] or greater in thickness if, after straightening and in assembly, the gap cannot be closed sufficiently to meet this tolerance. In such cases, a maximum gap of 5/16 in. [8 mm] is applicable provided a sealing weld or suitable backing material is used to prevent melt-through and the final weld meets the requirements for effective throat. Tolerances for bearing joints shall be in accordance with the applicable contract specifications.

Note E: Minimum effective throat as shown in Table 5.

Note J2: If fillet welds are used in statically loaded structures to reinforce groove welds in corner and T-joints, they shall be equal to 1/4 $T_1$, but need not exceed 3/8 in. [10 mm].

Note Mp: Double-groove welds may have grooves of unequal depth, provided these conform to Note E. Also, the effective throat (E), less any reduction, applies individually to each groove.

Note V: For corner joints, the outside groove preparation may be in either or both members, provided the basic groove configuration is not changed and adequate edge distance is maintained to support the welding operations without excessive edge melting.

(1) For flat and horizontal positions, the tolerance for f = +U, –0.

## Figure I.2 (Continued)—Prequalified Partial Joint Penetration Groove Welded Joints



Copyright American Welding Society
Provided by IHS under license with AWS
No reproduction or networking permitted without license from IHS
Not for Resale

Butt, T-, or Corner Joint (BTC)
Partial Penetration (P)
Double-Bevel-Groove Weld (5)

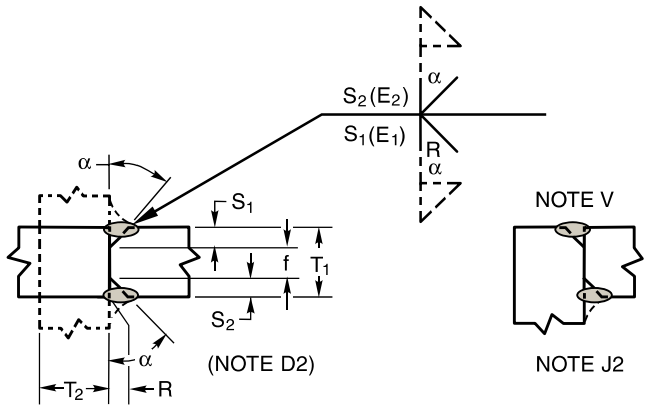


| Welding Process | Joint Designation | Base Metal Thickness, in. [mm] (U = Unlimited) | | Groove Preparation | | | Permitted Welding Positions | Effective Throat (E), in. [mm] | Notes |
|---|---|---|---|---|---|---|---|---|---|
| | | | | Root Opening Root Face, in. [mm] Groove Angle | Tolerances, in. [mm] for R & f; ° for α | | | | |
| | | $T_1$ | $T_2$ | | As Detailed (see 6.13) | As Fit Up (see 7.4.4) | | | |
| SMAW | BTC-P5 | 5/16 [8] min | U | R = 0<br>f = 1/8 [3] min<br>α = 45° | +1/16 [2], –0<br>U<br>+ 10°, –0° | +1/8 [3], –1/16 [2]<br>±1/16 [2]<br>+10°, –5° | All | ($S_1$ + $S_2$)<br>–1/4 [6] | D2, E, J2, Mp |
| GMAW<br>FCAW | BTC-P5-GF | 1/2 [13] min | U | R = 0<br>f = 1/8 [3] min<br>α = 45° | +1/16 [2], –0<br>U(1)<br>+10°, –0° | +1/8 [3], –1/16 [2]<br>±1/16 [2]<br>+10°, –5° | Flat & Horizontal | $S_1$ + $S_2$ | A, D2, E, J2, Mp |
| | | | | | | | Vertical & Overhead | ($S_1$ + $S_2$)<br>–1/4 [6] | |
| SAW | TC-P5-S | 3/4 [20] min | U | R = 0<br>f = 1/4 [6] min<br>α = 60° | ±0<br>+U, –0<br>+10°, –0° | +1/16 [2], –0<br>±1/16 [2]<br>+10°, –5° | Flat | $S_1$ + $S_2$ | D2, E, J2, Mp |

**(F)**

Note A: Not prequalified for gas metal arc welding using short circuiting transfer.

Note D2: The parts to be joined by partial joint penetration groove welds parallel to the length of the member, bearing joints excepted, shall be brought into as close contact as practicable. The gap between parts shall not exceed 3/16 in. [5 mm]) except in cases involving rolled shapes or plates 3 in. [75 mm] or greater in thickness if, after straightening and in assembly, the gap cannot be closed sufficiently to meet this tolerance. In such cases, a maximum gap of 5/16 in. [8 mm] is applicable provided a sealing weld or suitable backing material is used to prevent melt-through and the final weld meets the requirements for effective throat. Tolerances for bearing joints shall be in accordance with the applicable contract specifications.

Note E: Minimum effective throat as shown in Table 5.

Note J2: If fillet welds are used in statically loaded structures to reinforce groove welds in corner and T-joints, they shall be equal to 1/4 $T_1$, but need not exceed 3/8 in. [10 mm].

Note Mp: Double-groove welds may have grooves of unequal depth, provided these conform to Note E. Also, the effective throat ($E_1$ or $E_2$), less any reduction, applies individually to each groove.

Note V: For corner joints, the outside groove preparation may be in either or both members, provided the basic groove configuration is not changed and adequate edge distance is maintained to support the welding operations without excessive edge melting.

(1) For flat and horizontal positions, the tolerance for f = +U, –0.

## Figure I.2 (Continued)—Prequalified Partial Joint Penetration Groove Welded Joints



Copyright American Welding Society
Provided by IHS under license with AWS
No reproduction or networking permitted without license from IHS
Not for Resale

Butt or Corner Joint (BC)
Partial Penetration (P)
Single-U-Groove Weld (6)

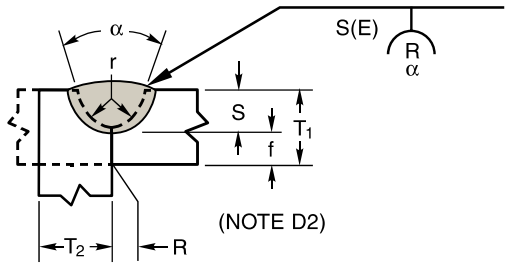


| Welding Process | Joint Designation | Base Metal Thickness, in. [mm] (U = Unlimited) | | Groove Preparation | | | Permitted Welding Positions | Effective Throat (E), in. [mm] | Notes |
|---|---|---|---|---|---|---|---|---|---|
| | | | | Root Opening Root Face Groove Radius, in. [mm] Groove Angle | Tolerances, in. [mm] for R, f, & r; ° for α | | | | |
| | | $T_1$ | $T_2$ | | As Detailed (see 6.13) | As Fit Up (see 7.4.4) | | | |
| SMAW | BC-P6 | 1/4 [6] min | U | R = 0<br>f = 1/32 [1] min<br>r = 1/4 [6]<br>α = 45° | +1/16 [2], –0<br>+U, –0<br>+1/4 [6], –0<br>+ 10°, –0° | +1/8 [3], –1/16 [2]<br>±1/16 [2]<br>±1/16 [2]<br>+10°, –5° | All | S | D2, E |
| GMAW<br>FCAW | BC-P6-GF | 1/4 [6] min | U | R = 0<br>f = 1/8 [3] min<br>r = 1/4 [6]<br>α = 20° | +1/16 [2], –0<br>+U, –0<br>+1/4 [6], –0<br>+ 10°, –0° | +1/8 [3], –1/16 [2]<br>±1/16 [2]<br>±1/16 [2]<br>+10°, –5° | All | S | A, D2, E |
| SAW | BC-P6-S | 7/16 [11] min | U | R = 0<br>f = 1/4 [6] min<br>r = 1/4 [6]<br>α = 20° | +1/16 [2], –0<br>+U, –0<br>+1/4 [6], –0<br>+ 10°, –0° | +1/16 [2], –0<br>±1/16 [2]<br>±1/16 [2]<br>+10°, –5° | Flat | S | D2, E |

**(G)**

Note A: Not prequalified for gas metal arc welding using short circuiting transfer.

Note D2: The parts to be joined by partial joint penetration groove welds parallel to the length of the member, bearing joints excepted, shall be brought into as close contact as practicable. The gap between parts shall not exceed 3/16 in. [5 mm]) except in cases involving rolled shapes or plates 3 in. [75 mm] or greater in thickness if, after straightening and in assembly, the gap cannot be closed sufficiently to meet this tolerance. In such cases, a maximum gap of 5/16 in. [8 mm] is applicable provided a sealing weld or suitable backing material is used to prevent melt-through and the final weld meets the requirements for effective throat. Tolerances for bearing joints shall be in accordance with the applicable contract specifications.

Note E: Minimum effective throat as shown in Table 5.

## Figure I.2 (Continued)—Prequalified Partial Joint Penetration Groove Welded Joints



Copyright American Welding Society
Provided by IHS under license with AWS
No reproduction or networking permitted without license from IHS
Not for Resale

Butt Joint (B)
Partial Penetration (P)
Double-U-Groove Weld (7)

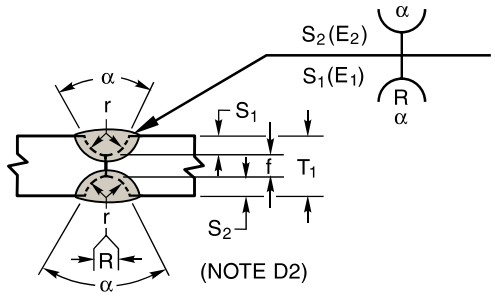


| Welding Process | Joint Designation | Base Metal Thickness, in. [mm] (U = Unlimited) | | Groove Preparation | | | Permitted Welding Positions | Effective Throat (E), in. [mm] | Notes |
|---|---|---|---|---|---|---|---|---|---|
| | | | | Root Opening Root Face Groove Radius, in. [mm] Groove Angle | Tolerances, in. [mm] for R, f, & r; ° for α | | | | |
| | | $T_1$ | $T_2$ | | As Detailed (see 6.13) | As Fit Up (see 7.4.4) | | | |
| SMAW | B-P7 | 1/2 [13] min | — | R = 0<br>f = 1/8 [3] min<br>r = 1/4 [6]<br>α = 45° | +1/16 [2], –0<br>+U, –0<br>+1/4 [6], –0<br>+ 10°, –0° | +1/8 [3], –1/16 [2]<br>±1/16 [2]<br>±1/16 [2]<br>+10°, –5° | All | $S_1 + S_2$ | D2, E, Mp |
| GMAW<br>FCAW | B-P7-GF | 1/2 [13] min | — | R = 0<br>f = 1/8 [3] min<br>r = 1/4 [6]<br>α = 20° | +1/16 [2], –0<br>+U, –0<br>+1/4 [6], –0<br>+ 10°, –0° | +1/8 [3], –1/16 [2]<br>±1/16 [2]<br>±1/16 [2]<br>+10°, –5° | All | $S_1 + S_2$ | A, D2, E, Mp |
| SAW | B-P7-S | 3/4 [20] min | — | R = 0<br>f = 1/4 [6] min<br>r = 1/4 [6]<br>α = 20° | +1/16 [2], –0<br>+U, –0<br>+1/4 [6], –0<br>+ 10°, –0° | +1/16 [2], –0<br>±1/16 [2]<br>±1/16 [2]<br>+10°, –5° | Flat | $S_1 + S_2$ | D2, E, Mp |

**(H)**

Note A: Not prequalified for gas metal arc welding using short circuiting transfer.

Note D2: The parts to be joined by partial joint penetration groove welds parallel to the length of the member, bearing joints excepted, shall be brought into as close contact as practicable. The gap between parts shall not exceed 3/16 in. [5 mm]) except in cases involving rolled shapes or plates 3 in. [75 mm] or greater in thickness if, after straightening and in assembly, the gap cannot be closed sufficiently to meet this tolerance. In such cases, a maximum gap of 5/16 in. [8 mm] is applicable provided a sealing weld or suitable backing material is used to prevent melt-through and the final weld meets the requirements for effective throat. Tolerances for bearing joints shall be in accordance with the applicable contract specifications.

Note E: Minimum effective throat as shown in Table 5.

Note Mp: Double-groove welds may have grooves of unequal depth, provided these conform to Note E. Also, the effective throat ($E_1$ or $E_2$), less any reduction, applies individually to each groove.

## Figure I.2 (Continued)—Prequalified Partial Joint Penetration Groove Welded Joints



Copyright American Welding Society
Provided by IHS under license with AWS
No reproduction or networking permitted without license from IHS
Not for Resale

Butt Joint (B)
T-Joint (T)
Corner Joint (C)
Partial Penetration (P)
Single-J-Groove Weld (8)

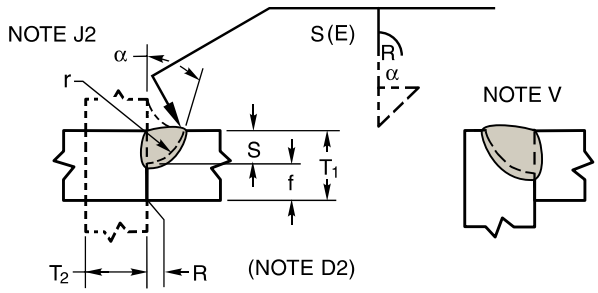


| Welding Process | Joint Designation | Base Metal Thickness, in. [mm] (U = Unlimited) $T_1$ | $T_2$ | Groove Preparation: Root Opening Root Face Groove Radius, in. [mm] Groove Angle | Tolerances, in. [mm] for R, f, & r; ° for α: As Detailed (see 6.13) | As Fit Up (see 7.4.4) | Permitted Welding Positions | Effective Throat (E), in. [mm] | Notes |
|---|---|---|---|---|---|---|---|---|---|
| SMAW | TC-P8 (T & Inside Corner Joints) | 1/4 [6] min | U | R = 0<br>f = 1/8 [3] min<br>r = 3/8 [10]<br>α = 45° | +1/16 [2], –0<br>+U, –0<br>+1/4 [6], –0<br>+10°, –0° | +1/8 [3], –1/16 [2]<br>±1/16 [2]<br>±1/16 [2]<br>+10°, –5° | All | S | D2, E, J2 |
| | BC-P8 (Butt & Outside Corner Joints) | 1/4 [6] min | U | R = 0<br>f = 1/8 [3] min<br>r = 3/8 [10]<br>α = 30° | +1/16 [2], –0<br>+U, –0<br>+1/4 [6], –0<br>+10°, –0° | +1/8 [3], –1/16 [2]<br>±1/16 [2]<br>±1/16 [2]<br>+10°, –5° | All | S | D2, E, V |
| GMAW FCAW | TC-P8-GF (T & Inside Corner Joints) | 1/4 [6] min | U | R = 0<br>f = 1/8 [3] min<br>r = 3/8 [10]<br>α = 45° | +1/16 [2], –0<br>+U, –0<br>+1/4 [6], –0<br>+10°, –0° | +1/8 [3], –1/16 [2]<br>±1/16 [2]<br>±1/16 [2]<br>+10°, –5° | All | S | A, D2, E, J2 |
| | BC-P8-GF (Butt & Outside Corner Joints) | 1/4 [6] min | U | R = 0<br>f = 1/8 [3] min<br>r = 3/8 [10]<br>α = 30° | +1/16 [2], –0<br>+U, –0<br>+1/4 [6], –0<br>+10°, –0° | +1/8 [3], –1/16 [2]<br>±1/16 [2]<br>±1/16 [2]<br>+10°, –5° | All | S | A, D2, E, V |
| SAW | C-P8-S (Outside Corner) | 7/16 [11] min | U | R = 0<br>f = 1/4 [6] min<br>r = 1/2 [13]<br>α = 20° | ±0<br>+U, –0<br>+1/4 [6], –0<br>+10°, –0° | +1/16 [2], –0<br>±1/16 [2]<br>±1/16 [2]<br>+10°, –5° | Flat | S | D2, E, V |
| | T-P8-S (T- & Inside Corner) | 7/16 [11] min | U | R = 0<br>f = 1/4 [6] min<br>r = 1/2 [13]<br>α = 45° | ±0<br>+U, –0<br>+1/4 [6], –0<br>+10°, –0° | +1/16 [2], –0<br>±1/16 [2]<br>±1/16 [2]<br>+10°, –5° | Flat | S | D2, E, J2 |

**(I)**

Note A: Not prequalified for gas metal arc welding using short circuiting transfer.

Note D2: The parts to be joined by partial joint penetration groove welds parallel to the length of the member, bearing joints excepted, shall be brought into as close contact as practicable. The gap between parts shall not exceed 3/16 in. [5 mm]) except in cases involving rolled shapes or plates 3 in. [75 mm] or greater in thickness if, after straightening and in assembly, the gap cannot be closed sufficiently to meet this tolerance. In such cases, a maximum gap of 5/16 in. [8 mm] is applicable provided a sealing weld or suitable backing material is used to prevent melt-through and the final weld meets the requirements for effective throat. Tolerances for bearing joints shall be in accordance with the applicable contract specifications.

Note E: Minimum effective throat as shown in Table 5.

Note J2: If fillet welds are used in statically loaded structures to reinforce groove welds in corner and T-joints, they shall be equal to 1/4 $T_1$, but need not exceed 3/8 in. [10 mm].

Note V: For corner joints, the outside groove preparation may be in either or both members, provided the basic groove configuration is not changed and adequate edge distance is maintained to support the welding operations without excessive edge melting.

## Figure I.2 (Continued)—Prequalified Partial Joint Penetration Groove Welded Joints



Copyright American Welding Society
Provided by IHS under license with AWS
No reproduction or networking permitted without license from IHS
Not for Resale

Butt Joint (B)
T-Joint (T)
Corner Joint (C)
Partial Penetration (P)
Double-J-Groove Weld (9)

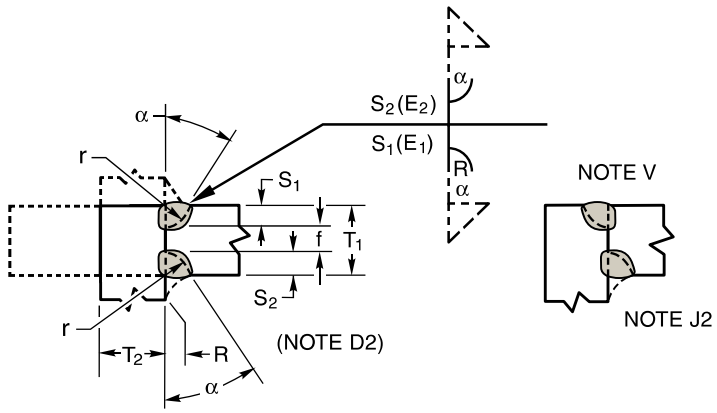


| Welding Process | Joint Designation | Base Metal Thickness, in. [mm] (U = Unlimited) | | Groove Preparation | | | Permitted Welding Positions | Effective Throat (E), in. [mm] | Notes |
|---|---|---|---|---|---|---|---|---|---|
| | | | | Root Opening Root Face Groove Radius, in. [mm] Groove Angle | Tolerances, in. [mm] for R, f, & r; ° for α | | | | |
| | | $T_1$ | $T_2$ | | As Detailed (see 6.13) | As Fit Up (see 7.4.4) | | | |
| SMAW | BTC-P9 | 1/2 [13] min | U | R = 0<br>f = 1/8 [3] min<br>r = 3/8 [10]<br>α = 45° | +1/16 [2], –0<br>+U, –0<br>+1/4 [6], –0<br>+10°, –0° | ±1/16 [2]<br>±1/16 [2]<br>±1/16 [2]<br>+10°, –5° | All | $S_1 + S_2$ | D2, E, J2, V |
| GMAW FCAW | BTC-P9-GF | 1/2 [13] min | U | R = 0<br>f = 1/8 [3] min<br>r = 3/8 [10]<br>α = 30° | +1/16 [2], –0<br>+U, –0<br>+1/4 [6], –0<br>+10°, –0° | ±1/16 [2]<br>±1/16 [2]<br>±1/16 [2]<br>+10°, –5° | All | $S_1 + S_2$ | A, D2, E, J2, V |
| SAW | C-P9-S | 3/4 [20] min | U | R = 0<br>f = 1/4 [6] min<br>r = 1/2 [13]<br>α = 20° | ±0<br>+U, –0<br>+1/4 [6], –0<br>+10°, –0° | +1/16 [2], –0(1)<br>±1/16 [2]<br>±1/16 [2]<br>+10°, –5° | Flat | $S_1 + S_2$ | D2, E, J2, V |
| | T-P9-S | 3/4 [20] min | U | R = 0<br>f = 1/4 [6] min<br>r = 1/2 [13]<br>α = 45° | ±0<br>+U, –0<br>+1/4 [6], –0<br>+10°, –0° | +1/16 [2], –0(1)<br>±1/16 [2]<br>±1/16 [2]<br>+10°, –5° | Flat | $S_1 + S_2$ | D2, E, J2 |

**(J)**

Note A: Not prequalified for gas metal arc welding using short circuiting transfer.

Note D2: The parts to be joined by partial joint penetration groove welds parallel to the length of the member, bearing joints excepted, shall be brought into as close contact as practicable. The gap between parts shall not exceed 3/16 in. [5 mm]) except in cases involving rolled shapes or plates 3 in. [75 mm] or greater in thickness if, after straightening and in assembly, the gap cannot be closed sufficiently to meet this tolerance. In such cases, a maximum gap of 5/16 in. [8 mm] is applicable provided a sealing weld or suitable backing material is used to prevent melt-through and the final weld meets the requirements for effective throat. Tolerances for bearing joints shall be in accordance with the applicable contract specifications.

Note E: Minimum effective throat as shown in Table 5.

Note J2: If fillet welds are used in statically loaded structures to reinforce groove welds in corner and T-joints, they shall be equal to 1/4 $T_1$, but not exceed 3/8 in. [10 mm].

Note V: For corner joints, the outside groove preparation may be in either or both members, provided the basic groove configuration is not changed and adequate edge distance is maintained to support the welding operations without excessive edge melting.

(1) Fit-up tolerance. SAW: see Note D2; for rolled shapes R may be 5/16 in. [8 mm] in thick plates if backing is provided.

## Figure I.2 (Continued)—Prequalified Partial Joint Penetration Groove Welded Joints



Copyright American Welding Society
Provided by IHS under license with AWS
No reproduction or networking permitted without license from IHS
Not for Resale

This page is intentionally blank.



Copyright American Welding Society
Provided by IHS under license with AWS
No reproduction or networking permitted without license from IHS
Not for Resale

## Nonmandatory Annexes

# Annex A
# Suggested Forms

(This Annex is not a part of AWS D14.1/D14.1M:2005, *Specification for Welding of Industrial and Mill Cranes and Other Material Handling Equipment*, but is included for informational purposes only.)

## A1. Commentary on the Use of Welding Procedure Forms (Front) and (Back)

The form may be used to record information for either a WPS or a PQR. The user should indicate their selected application in the appropriate boxes or the user may choose to blank out the inappropriate headings.

The WPSs and PQRs are to be signed by the authorized representative of the Manufacturer or Contractor.

For joint details on the WPS, a sketch or a reference to the applicable prequalified joint detail may be used (e.g., B-U4a).

## A2. Prequalified

The WPS may be Prequalified in accordance with all of the provisions of 9.1, in which case only the one-page document, Form E1, is required.

## A3. Qualified by Testing

The WPS may be qualified by testing in accordance with the provisions of Part B of Section 9. In this case, a supporting PQR is required in addition to the WPS. For the PQR, Form E1 (Front) can again be used with an appropriate heading change. Also, the Form E1 (Back) may be used to record the test results and the certifying statement.

For the WPS, state the permitted ranges qualified by testing or state the appropriate tolerances on essential variables (e.g., 250 A ±10%).

For the PQR, record the actual joint details and the values of essential variables used in the testing. Attach a copy of the Mill Test Report for the material tested. Testing laboratory data reports may also be included as backup information.

The inclusion of items not required by this Specification is optional; however, they may be of use in setting up equipment or understanding test results.



Copyright American Welding Society
Provided by IHS under license with AWS
No reproduction or networking permitted without license from IHS
Not for Resale

**WELDING PROCEDURE SPECIFICATION (WPS) Yes ☐**
**PREQUALIFIED _____ QUALIFIED BY TESTING _____**
**or PROCEDURE QUALIFICATION RECORDS (PQR) Yes ☐**

Identification # _____
Revision _____ Date _____ By _____
Authorized by _____ Date _____
Type—Manual ☐ Semi-Automatic ☐
Machine ☐ Automatic ☐

Company Name _____
Welding Process(es) _____
Supporting PQR No.(s) _____

**JOINT DESIGN USED**
Type:
Single ☐ Double Weld ☐
Backing: Yes ☐ No ☐
Backing Material:
Root Opening _____ Root Face Dimension _____
Groove Angle: _____ Radius (J–U) _____
Back Gouging: Yes ☐ No ☐ Method _____

**BASE METALS**
Material Spec. _____
Type or Grade _____
Thickness: Groove _____ Fillet _____
Diameter (Pipe) _____

**FILLER METALS**
AWS Specification _____
AWS Classification _____

**SHIELDING**
Flux _____ Gas _____
Composition _____
Electrode-Flux (Class) _____ Flow Rate _____
_____ Gas Cup Size _____

**PREHEAT**
Preheat Temp., Min _____
Interpass Temp., Min _____ Max _____

**POSITION**
Position of Groove: _____ Fillet: _____
Vertical Progression: Up ☐ Down ☐

**ELECTRICAL CHARACTERISTICS**
_____
Transfer Mode (GMAW) Short-Circuiting ☐
Globular ☐ Spray ☐
Current: AC ☐ DCEP ☐ DCEN ☐ Pulsed ☐
Other _____
Tungsten Electrode (GTAW)
Size: _____
Type: _____

**TECHNIQUE**
Stringer or Weave Bead: _____
Multi-pass or Single Pass (per side) _____
Number of Electrodes _____
Electrode Spacing Longitudinal _____
Lateral _____
Angle _____

Contact Tube to Work Distance _____
Peening _____
Interpass Cleaning: _____

**POSTWELD HEAT TREATMENT**
Temp. _____
Time _____

**WELDING PROCEDURE**

| Pass or Weld Layer(s) | Process | Filler Metals | | Current | | Volts | Travel Speed | Joint Details |
|---|---|---|---|---|---|---|---|---|
| | | Class | Diam. | Type & Polarity | Amps or Wire Feed Speed | | | |
| | | | | | | | | |

**Figure A.1—Sample Form E1, Front**



Copyright American Welding Society
Provided by IHS under license with AWS
No reproduction or networking permitted without license from IHS
Not for Resale

**Procedure Qualification Record (PQR) # _____**
**Test Results**

**TENSILE TEST**

| Specimen No. | Width | Thickness | Area | Ultimate Tensile Load, lb | Ultimate Unit Stress, psi | Character of Failure and Location |
|---|---|---|---|---|---|---|
| | | | | | | |
| | | | | | | |
| | | | | | | |
| | | | | | | |

**GUIDED BEND TEST**

| Specimen No. | Type of Bend | Result | Remarks |
|---|---|---|---|
| | | | |
| | | | |
| | | | |
| | | | |

**VISUAL INSPECTION**
Appearance_____
Undercut _____
Piping porosity _____
Convexity_____
Test date _____
Witnessed by_____

**RADIOGRAPHIC-ULTRASONIC EXAMINATION**
RT Report No.: _____ Result_____
UT Report No.:_____ Result_____

**FILLET WELD TEST RESULTS**
Minimum size multiple pass Macroetch
1. _____ 3. _____
2. _____

Maximum size single pass Macroetch
1. _____ 3. _____
2. _____

**OTHER TESTS**

**ALL-WELD-METAL TENSION TEST**
Tensile strength, psi [MPa] _____
Yield point/strength, psi [MPa] _____
Elongation in 2 in. [50 mm], % _____
Laboratory Test No. _____

Welder's name _____ Clock No. _____ Stamp No. _____
Who by virtue of these tests is also qualified as an individual.

Tests conducted by _____ Laboratory

Laboratory Test No. _____

Per _____

We, the undersigned, certify that the statements in this record are correct and that the test welds were prepared, welded, and tested in accordance with the requirements of AWS D14.1, (_____).
(year)

Signed _____
Manufacturer or Contractor

By _____

Title _____

Date _____

**Figure A.2—Sample Form, E1, Back**



Copyright American Welding Society
Provided by IHS under license with AWS
No reproduction or networking permitted without license from IHS
Not for Resale

## WELDER, WELDING OPERATOR OR TACK WELDER QUALIFICATION TEST RECORD

Type of Welder _____

Name _____ Identification No._____

Welding Procedure Specification No. _____ Rev _____ Date _____

| Variables | Record Actual Values Used in Qualification | Qualification Range |
|---|---|---|
| Process/Type (9.16.2) | | |
| Electrode (single or multiple) | | |
| Current/Polarity | | |
| Position (9.16.5) | | |
| Weld Progression (9.16.7) | | |
| Backing (YES or NO) (9.16.8) | | |
| Material/Spec. (9.16.1) | to | |
| Base Metal | | |
| Thickness: (Plate) | | |
| Groove | | |
| Fillet | | |
| Thickness: (Pipe/tube) | | |
| Groove | | |
| Fillet | | |
| Diameter: (Pipe) | | |
| Groove | | |
| Fillet | | |
| Filler Metal (9.16.3) | | |
| Spec. No. | | |
| Class | | |
| F-No. | | |
| Gas/Flux Type (9.16.4) | | |
| Other | | |

**VISUAL INSPECTION** (9.12.6 or 9.12.7)

Acceptable YES or NO _____

**Guided Bend Test Results** (9.28.1/9.29)

| Type | Result | Type | Result |
|---|---|---|---|
| | | | |
| | | | |

**Fillet Test Results** (9.28.2/9.28.3; 9.39.4/9.39.5)

Appearance _____ Fillet Size _____

Fracture Test Root Penetration _____ Macroetch _____

(Describe the location, nature, and size of any crack or tearing of the specimen.)

Inspected by _____ Test Number_____

Organization _____ Date _____

**RADIOGRAPHIC TEST RESULTS** (9.28.4/9.39.2)

| Film Identification Number | Results | Remarks | Film Identification Number | Results | Remarks |
|---|---|---|---|---|---|
| | | | | | |
| | | | | | |

Interpreted by _____ Test Number_____

Organization _____ Date _____

We, the undersigned, certify that the statements in this record are correct and that the test welds were prepared, welded, and tested in accordance with the requirements of AWS D14.1, (_____).
(year)

Manufacturer or Contractor _____ Authorized By_____

Date _____

**Figure A.3—Sample Form E2**



Copyright American Welding Society
Provided by IHS under license with AWS
No reproduction or networking permitted without license from IHS
Not for Resale

## WPS QUALIFICATION TEST RECORD FOR ELECTROSLAG AND ELECTROGAS WELDING

### PROCEDURE SPECIFICATION

Material specification _____
Welding process _____
Position of welding _____
Filler metal specification _____
Filler metal classification _____
Filler metal _____
Flux _____
Shielding gas _____ Flow rate _____
Gas dew point _____
Thickness range this test qualifies _____
Single or multiple pass _____
Single or multiple arc _____
Welding current _____
Preheat temperature _____
Postheat temperature _____
Welder's name _____
_____

### VISUAL INSPECTION

Appearance _____
Undercut _____
Piping porosity _____
_____
Test date _____
Witnessed by _____

### TEST RESULTS

**Reduced-section tensile test**

Tensile strength, psi [MPa]
1. _____
2. _____

**All-weld-metal tension test**

Tensile strength, psi [MPa] _____
Yield point/strength, psi [MPa] _____
Elongation in 2 in. [50 mm], % _____

**Side-bend tests**

1. _____ 3. _____
2. _____ 4. _____

**Radiographic-ultrasonic examination** _____
RT Report No. _____
UT Report No. _____

**Impact tests, ft-lb [N]**

Size of specimen _____ Test temp. _____
1. _____ 2. _____ 3. _____ 4. _____
5. _____ 6. _____ Avg. _____
High _____ Low _____
Laboratory Test No. _____

### WELDING PROCEDURE

| Pass No. | Electrode Size | Welding Current | | Joint Detail |
|---|---|---|---|---|
| | | Amperes | Volts | |
| Guide tube flux _____<br>Guide tube composition _____<br>Guide tube diameter _____<br>Vertical rise speed _____<br>Traverse length _____<br>Traverse speed _____<br>Dwell _____<br>Type of molding shoe _____ | | | |

We, the undersigned, certify that the statements in this record are correct and that the test welds were prepared, welded, and tested in accordance with the requirements of AWS D14.1, (_____).
(year)

Procedure No. _____
Revision No. _____

Manufacturer or Contractor _____
Authorized by _____
Date _____

**Figure A.4—Sample Form E3**



Copyright American Welding Society
Provided by IHS under license with AWS
No reproduction or networking permitted without license from IHS
Not for Resale

## REPORT OF RADIOGRAPHIC EXAMINATION OF WELDS

**Project** _____
Quality requirements—Section No. _____
Reported to _____

### WELD LOCATION AND IDENTIFICATION SKETCH

**Technique**
Source _____
Film to source _____
Exposure time _____
Screens _____
Film type _____

(Describe length, width, and thickness of all joints radiographed.)

| Date | Weld Identification | Area | Interpretation | | Repairs | | Remarks |
|---|---|---|---|---|---|---|---|
| | | | Accept. | Reject | Accept. | Reject | |
| | | | | | | | |
| | | | | | | | |
| | | | | | | | |
| | | | | | | | |
| | | | | | | | |
| | | | | | | | |
| | | | | | | | |
| | | | | | | | |
| | | | | | | | |
| | | | | | | | |
| | | | | | | | |
| | | | | | | | |
| | | | | | | | |
| | | | | | | | |
| | | | | | | | |
| | | | | | | | |
| | | | | | | | |
| | | | | | | | |
| | | | | | | | |
| | | | | | | | |
| | | | | | | | |

We, the undersigned, certify that the statements in this record are correct and that the test welds were prepared and tested in accordance with the requirements of AWS D14.1, (_____).
(year)

Radiographer(s) _____ Manufacturer or Contractor _____

Interpreter _____ Authorized by _____

Test date _____ Date _____

**Figure A.5—Sample Form E4**



Copyright American Welding Society
Provided by IHS under license with AWS
No reproduction or networking permitted without license from IHS
Not for Resale

## REPORT OF MAGNETIC-PARTICLE EXAMINATION OF WELDS

**Project** _____

Quality requirements—Section No. _____

Reported to _____

### WELD LOCATION AND IDENTIFICATION SKETCH

Quantity: _____ Total Accepted: _____ Total Rejected: _____

| Date | Weld Identification | Area Examined | | Interpretation | | Repairs | | Remarks |
|---|---|---|---|---|---|---|---|---|
| | | Entire | Specific | Accept. | Reject | Accept. | Reject | |
| | | | | | | | | |
| | | | | | | | | |
| | | | | | | | | |
| | | | | | | | | |
| | | | | | | | | |
| | | | | | | | | |
| | | | | | | | | |
| | | | | | | | | |
| | | | | | | | | |
| | | | | | | | | |
| | | | | | | | | |
| | | | | | | | | |

*PRE-EXAMINATION*

Surface Preparation: _____

*EQUIPMENT*

Instrument Make: _____ Model: _____ S. No.: _____

*METHOD OF INSPECTION*

☐ Dry ☐ Wet ☐ Visible ☐ Fluorescent

How Media Applied: _____

☐ Residual ☐ Continuous ☐ True-Continuous

☐ AC ☐ DC ☐ Half-Wave

☐ Prods ☐ Yoke ☐ Cable Wrap ☐ Other _____

Direction for Field: ☐ Circular ☐ Longitudinal

Strength of Field: _____

(Ampere-turns, field density, magnetizing force, number, and duration of force application.)

*POST EXAMINATION*

Demagnetizing Technique (if required): _____

Cleaning (if required): _____ Marking Method: _____

We, the undersigned, certify that the statements in this record are correct and that the test welds were prepared and tested in accordance with the requirements of AWS D14.1, (_____).
(year)

Inspector _____ Manufacturer or Contractor _____

Level _____ Authorized By _____

Test Date _____ Date _____

**Figure A.6—Sample Form E5**



Copyright American Welding Society
Provided by IHS under license with AWS
No reproduction or networking permitted without license from IHS
Not for Resale

## REPORT OF ULTRASONIC TESTING OF WELDS

Project _____ Report No. _____

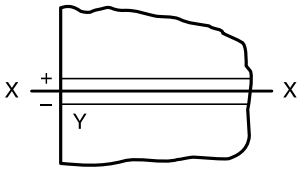


Weld identification _____
Material thickness _____
Weld joint AWS _____
Welding process _____
Quality requirements—Section No. _____
Remarks _____

| Line Number | Indication Number | Transducer Angle | From Face (A, B, C) | Leg (I, II, III) | Decibels | | | | Discontinuity | | | | | Discontinuity Evaluation | Remarks |
|---|---|---|---|---|---|---|---|---|---|---|---|---|---|---|---|
| | | | | | Indication Level | Reference Level | Attenuation Factor | Indication Rating | Length | Angular Distance (sound path) | Depth from "A" Surface | Distance | | | |
| | | | | | a | b | c | d | | | | From X | From Y | | |
| 1 | | | | | | | | | | | | | | | |
| 2 | | | | | | | | | | | | | | | |
| 3 | | | | | | | | | | | | | | | |
| 4 | | | | | | | | | | | | | | | |
| 5 | | | | | | | | | | | | | | | |
| 6 | | | | | | | | | | | | | | | |
| 7 | | | | | | | | | | | | | | | |
| 8 | | | | | | | | | | | | | | | |
| 9 | | | | | | | | | | | | | | | |
| 10 | | | | | | | | | | | | | | | |
| 11 | | | | | | | | | | | | | | | |
| 12 | | | | | | | | | | | | | | | |
| 13 | | | | | | | | | | | | | | | |
| 14 | | | | | | | | | | | | | | | |
| 15 | | | | | | | | | | | | | | | |
| 16 | | | | | | | | | | | | | | | |
| 17 | | | | | | | | | | | | | | | |
| 18 | | | | | | | | | | | | | | | |
| 19 | | | | | | | | | | | | | | | |
| 20 | | | | | | | | | | | | | | | |
| 21 | | | | | | | | | | | | | | | |
| 22 | | | | | | | | | | | | | | | |
| 23 | | | | | | | | | | | | | | | |
| 24 | | | | | | | | | | | | | | | |
| 25 | | | | | | | | | | | | | | | |
| 26 | | | | | | | | | | | | | | | |

We, the undersigned, certify that the statements in this record are correct and that the welds were prepared and tested in accordance with the requirements of AWS D14.1, (_____).
(year)

Test date _____ Manufacturer or Contractor _____

Inspected by _____ Authorized by _____

Date _____

**Figure A.7—Sample Form E6**



Copyright American Welding Society
Provided by IHS under license with AWS
No reproduction or networking permitted without license from IHS
Not for Resale

Notes:

1. In order to attain Rating "d"
   (A) With instruments with gain control, use the formula a – b – c = d.
   (B) With instruments with attenuation control, use the formula b – a – c = d.
   (C) A plus or minus sign shall accompany the "d" figure unless "d" is equal to zero.
2. Distance from X is used in describing the location of a weld discontinuity in a direction perpendicular to the weld reference line. Unless this figure is zero, a plus or minus sign shall accompany it.
3. Distance from Y is used in describing the location of a weld discontinuity in a direction parallel to the weld reference line. This figure is attained by measuring the distance from the "Y" end of the weld to the beginning of said discontinuity.
4. Evaluation of Retested Repaired Weld Areas shall be tabulated on a new line on the report form. If the original report form is used, $R_n$ shall prefix the indication number. If additional forms are used, the R number shall prefix the report number.

## Figure A.7 (Continued)—Sample Form E6



Copyright American Welding Society
Provided by IHS under license with AWS
No reproduction or networking permitted without license from IHS
Not for Resale

## LIQUID PENETRANT INSPECTION REPORT

Customer _____ Date _____

Order No. _____ Material _____

Dwg. No. _____ Specification _____

For _____

| Pieces | Description | Comments |
|---|---|---|
| | | |
| | | |
| | | |
| | | |

Soak Time _____

The above parts have been carefully tested with liquid penetrant. This inspection is limited to defects of the type which can normally be located with the liquid penetrant inspection method.

_____

_____

**Figure A.8—Sample Form E7**



Copyright American Welding Society
Provided by IHS under license with AWS
No reproduction or networking permitted without license from IHS
Not for Resale

# Annex B

# Examples of Weld Quality Requirements

(This Annex is not a part of AWS D14.1/D14.1M:2005, *Specification for Welding of Industrial and Mill Cranes and other Material Handling Equipment*, but is included for informational purposes only.)

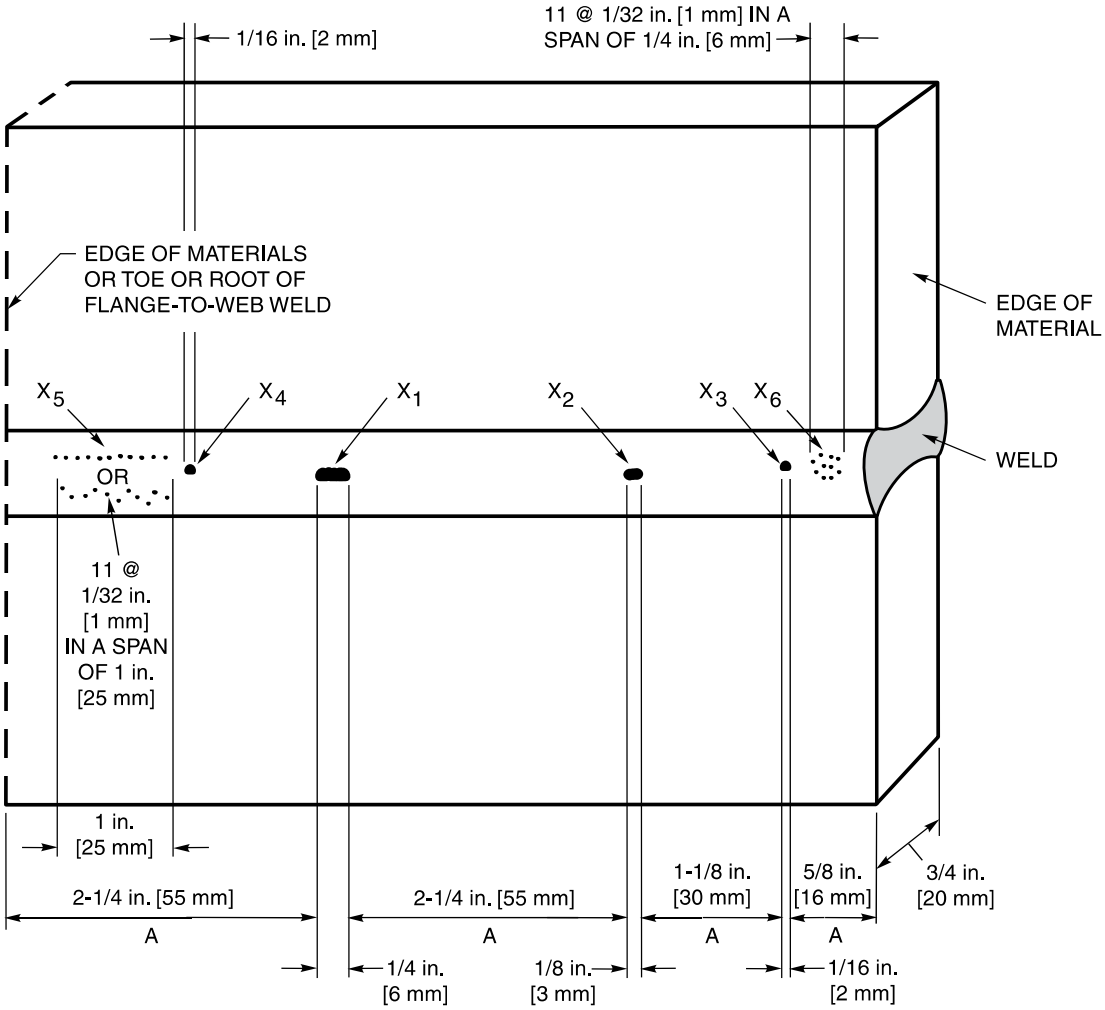


Notes:
1. A—the minimum clearance allowed between edges of porosity or fusion-type discontinuities 1/16 in. [2 mm] or larger. The larger of adjacent discontinuities governs.
2. $X_1$—the largest permissible porosity or fusion-type discontinuity for 3/4 in. [20 mm] joint thickness (see Figure 35).
3. $X_2$, $X_3$, $X_4$—porosity or fusion-type discontinuity 1/16 in. [2 mm] or larger, but less than maximum permissible for 3/4 in. [20 mm] joint thickness.
4. $X_5$, $X_6$—porosity or fusion-type discontinuity less than 1/16 in. [2 mm].

Interpretation:
1. Discontinuity size indicated is assumed to be its greatest dimension.
2. Porosity or fusion-type discontinuity $X_4$ is not acceptable because it is within the minimum clearance allowed between edges of such discontinuities (see 10.11.2 and Figure 35).
3. Remainder of weld is acceptable.

**Figure B.1—Examples of Weld Quality Requirements**



Copyright American Welding Society
Provided by IHS under license with AWS
No reproduction or networking permitted without license from IHS
Not for Resale

This page is intentionally blank.



Copyright American Welding Society
Provided by IHS under license with AWS
No reproduction or networking permitted without license from IHS
Not for Resale

# Annex C

# Guidelines for Preparation of Technical Inquiries for AWS Technical Committees

(This Annex is not a part of AWS D14.1/D14.1M:2005, *Specification for Welding of Industrial and Mill Cranes and Other Material Handling Equipment,* but is included for informational purposes only.)

## C1. Introduction

The AWS Board of Directors has adopted a policy whereby all official interpretations of AWS standards will be handled in a formal manner. Under that policy, all interpretations are made by the committee that is responsible for the standard. Official communication concerning an interpretation is through the AWS staff member who works with that committee. The policy requires that all requests for an interpretation be submitted in writing. Such requests will be handled as expeditiously as possible, but due to the complexity of the work and the procedures that must be followed, some interpretations may require considerable time.

## C2. Procedure

All inquiries shall be directed to:

Managing Director, Technical Services
American Welding Society
550 N.W. LeJeune Road
Miami, FL 33126

All inquiries shall contain the name, address, and affiliation of the inquirer, and they shall provide enough information for the committee to fully understand the point of concern in the inquiry. If that point is not clearly defined, the inquiry will be returned for clarification. For efficient handling, all inquiries should be typewritten and should also be in the format used here.

**C2.1 Scope.** Each inquiry shall address one single provision of the standard, unless the point of the inquiry involves two or more interrelated provisions. That provision shall be identified in the scope of the inquiry, along with the edition of the standard that contains the provisions or that the inquirer is addressing.

**C2.2 Purpose of the Inquiry.** The purpose of the inquiry shall be stated in this portion of the inquiry. The purpose can be either to obtain an interpretation of a standard's requirement, or to request the revision of a particular provision in the standard.

**C2.3 Content of the Inquiry.** The inquiry should be concise, yet complete, to enable the committee to quickly and fully understand the point of the inquiry. Sketches should be used when appropriate and all paragraphs, figures, tables, or Annexes, which bear on the inquiry shall be cited. If the point of the inquiry is to obtain a revision of the standard, the inquiry shall provide technical justification for that revision.

**C2.4 Proposed Reply.** The inquirer should, as a proposed reply, state an interpretation of the provision that is the point of the inquiry, or the wording for a proposed revision, if that is what inquirer seeks.

## C3. Interpretation of Provisions of the Standard

Interpretations of provisions of the standard are made by the relevant AWS Technical Committee. The secretary of the committee refers all inquiries to the Chair of the particular subcommittee that has jurisdiction over the portion of the standard addressed by the inquiry. The subcommittee reviews the inquiry and the proposed reply to determine what the response to the inquiry should be. Following the subcommittee's development of the response, the inquiry and the response are presented to the entire committee for review and approval. Upon



Copyright American Welding Society
Provided by IHS under license with AWS
No reproduction or networking permitted without license from IHS
Not for Resale

approval by the committee, the interpretation will be an official interpretation of the Society, and the secretary will transmit the response to the inquirer and to the *Welding Journal* for publication.

## C4. Publication of Interpretations

All official interpretations will appear in the *Welding Journal*.

## C5. Telephone Inquiries

Telephone inquiries to AWS headquarters concerning AWS standards should be limited to questions of a general nature or to matters directly related to the use of the standard. The Board of Directors' policy requires that all AWS staff members respond to a telephone request for an official interpretation of any AWS standard with the information that such an interpretation can be obtained only through a written request. The AWS headquarters staff cannot provide consulting services. The staff can, however, refer a caller to any of those consultants whose names are on file at AWS headquarters.

## C6. The AWS Technical Committee

The activities of AWS Technical Committees in regard to interpretations are limited strictly to the interpretation of provisions of standards prepared by the Committee or to consideration of revisions to existing provisions on the basis of new data or technology. Neither the Committee nor the staff is in a position to offer interpretive or consulting services on: (1) specific engineering problems; or (2) requirements of standards applied to fabrications outside the scope of the document or points not specifically covered by the standard. In such cases, the inquirer should seek assistance from a competent engineer experienced in the particular field of interest.



Copyright American Welding Society
Provided by IHS under license with AWS
No reproduction or networking permitted without license from IHS
Not for Resale

# Annex D
# Bibliography

(This Annex is not a part of AWS D14.1/D14.1M:2005, *Specification for Welding of Industrial and Mill Cranes and Other Material Handling Equipment,* but is included for informational purposes only.)

## D1. American Welding Society (AWS) References

(1) AWS A1.1, *Metric Practice Guide for the Welding Industry*

(2) AWS A5.17/5.17M-97, *Specification for Carbon Steel Electrodes and Fluxes for Submerged Arc Welding*

(3) AWS C3.2, *Standard Method for Evaluating the Strength of Brazed Joints in Shear*

(4) AWS D1.1, *Structural Welding Code—Steel*

(5) AWS D15.2, *Recommended Practice for the Welding of Rails and Related Rail Components for Use by Rail Vehicles*

(6) AWS F4.1, *Recommended Safe Practices for the Preparation for Welding and Cutting of Containers and Piping That Have Held Hazardous Substances*

## D2. American Association of State Highway & Transportation Officials (AASHTO)

(1) *Standard Specifications for Highway Bridges*

## D3. American National Standards Institute (ANSI)

(1) ANSI Z87.1, *Practice for Occupational and Educational Eye and Face Protection*

(2) ANSI Z49.1, *Safety in Welding, Cutting, and Allied Processes* (Published by AWS)

## D4. American Society of Mechanical Engineers (ASME) Standards

(1) ASME Boiler and Pressure Vessel Code, Section IX, *Qualification Standard for Welding and Brazing Procedures, Welders, Brazers, and Welding and Brazing Operators*

## D5. Canadian Standards Association (CSA)

(1) W178.2, *Certification of Welding Inspectors*



Copyright American Welding Society
Provided by IHS under license with AWS
No reproduction or networking permitted without license from IHS
Not for Resale

This page is intentionally blank.



Copyright American Welding Society
Provided by IHS under license with AWS
No reproduction or networking permitted without license from IHS
Not for Resale

## List of AWS Documents on Machinery and Equipment

| Designation | Title |
|---|---|
| D14.1/D14.1M | *Specification for Welding of Industrial and Mill Cranes and Other Material Handling Equipment* |
| D14.3/D14.3M | *Specification for Welding Earthmoving and Construction Equipment* |
| D14.4/D14.4M | *Specification for Welded Joints in Machinery and Equipment* |
| D14.5 | *Specification for Welding of Presses and Press Components* |
| D14.6/D14.6M | *Specification for Welding of Rotating Elements of Equipment* |



Copyright American Welding Society
Provided by IHS under license with AWS
No reproduction or networking permitted without license from IHS
Not for Resale

This page is intentionally blank.

--`,,`,,`,`-`-`,,`,,`,`,`,,`---



Copyright American Welding Society
Provided by IHS under license with AWS
No reproduction or networking permitted without license from IHS
Not for Resale

Copyright American Welding Society
Provided by IHS under license with AWS
No reproduction or networking permitted without license from IHS

Not for Resale