AWS D14.5/D14.5M:2009
An American National Standard

Specification for Welding of Presses and Press Components

American Welding Society

Approved American National Standard
ANSI

Copyright American Welding Society
Provided by IHS under license with AWS
No reproduction or networking permitted without license from IHS

Licensee=University of Texas Revised Sub Account/5620001114
Not for Resale, 08/29/2012 23:50:47 MDT

AWS D14.5/D14.5M:2009
An American National Standard

Approved by the
American National Standards Institute
April 16, 2009

Specification for Welding of Presses and Press Components

3rd Edition

Supersedes ANSI/AWS D14.5-97

Prepared by the
American Welding Society (AWS) D14 Committee on Machinery and Equipment

Under the Direction of the
AWS Technical Activities Committee

Approved by the
AWS Board of Directors

Abstract

Requirements are presented for the design and fabrication of cyclically loaded press weldments, which includes the weld repair of new and existing components. Filler metals and weld procedure specifications are recommended for the applicable base metals that are limited to those consisting of carbon and low-alloy steels. Allowable unit stresses are provided for weld metal and base metal for various cyclically loaded joint designs. This specification does not address the fabrication or weld repair of pressure containing components such as hydraulic cylinders, air cylinders, or die cushions.

American Welding Society
550 N.W. LeJeune Road, Miami, FL 33126

Copyright American Welding Society
Provided by IHS under license with AWS
No reproduction or networking permitted without license from IHS

Licensee=University of Texas Revised Sub Account/5620001114
Not for Resale, 08/29/2012 23:50:47 MDT

International Standard Book Number: 978-0-87171-752-8
American Welding Society
550 N.W. LeJeune Road, Miami, FL 33126
© 2009 by American Welding Society
All rights reserved
Printed in the United States of America

Photocopy Rights. No portion of this standard may be reproduced, stored in a retrieval system, or transmitted in any form, including mechanical, photocopying, recording, or otherwise, without the prior written permission of the copyright owner.

Authorization to photocopy items for internal, personal, or educational classroom use only or the internal, personal, or educational classroom use only of specific clients is granted by the American Welding Society provided that the appropriate fee is paid to the Copyright Clearance Center, 222 Rosewood Drive, Danvers, MA 01923, tel: (978) 750-8400; Internet: <www.copyright.com>.

Copyright American Welding Society
Provided by IHS under license with AWS
No reproduction or networking permitted without license from IHS
Licensee=University of Texas Revised Sub Account/5620001114
Not for Resale, 08/29/2012 23:50:47 MDT

Statement on the Use of American Welding Society Standards

All standards (codes, specifications, recommended practices, methods, classifications, and guides) of the American Welding Society (AWS) are voluntary consensus standards that have been developed in accordance with the rules of the American National Standards Institute (ANSI). When AWS American National Standards are either incorporated in, or made part of, documents that are included in federal or state laws and regulations, or the regulations of other governmental bodies, their provisions carry the full legal authority of the statute. In such cases, any changes in those AWS standards must be approved by the governmental body having statutory jurisdiction before they can become a part of those laws and regulations. In all cases, these standards carry the full legal authority of the contract or other document that invokes the AWS standards. Where this contractual relationship exists, changes in or deviations from requirements of an AWS standard must be by agreement between the contracting parties.

AWS American National Standards are developed through a consensus standards development process that brings together volunteers representing varied viewpoints and interests to achieve consensus. While the AWS administers the process and establishes rules to promote fairness in the development of consensus, it does not independently test, evaluate, or verify the accuracy of any information or the soundness of any judgments contained in its standards.

AWS disclaims liability for any injury to persons or to property, or other damages of any nature whatsoever, whether special, indirect, consequential, or compensatory, directly or indirectly resulting from the publication, use of, or reliance on this standard. AWS also makes no guarantee or warranty as to the accuracy or completeness of any information published herein.

In issuing and making this standard available, AWS is neither undertaking to render professional or other services for or on behalf of any person or entity, nor is AWS undertaking to perform any duty owed by any person or entity to someone else. Anyone using these documents should rely on his or her own independent judgment or, as appropriate, seek the advice of a competent professional in determining the exercise of reasonable care in any given circumstances. It is assumed that the use of this standard and its provisions are entrusted to appropriately qualified and competent personnel.

This standard may be superseded by the issuance of new editions. Users should ensure that they have the latest edition.

Publication of this standard does not authorize infringement of any patent or trade name. Users of this standard accept any and all liabilities for infringement of any patent or trade name items. AWS disclaims liability for the infringement of any patent or product trade name resulting from the use of this standard.

Finally, the AWS does not monitor, police, or enforce compliance with this standard, nor does it have the power to do so.

On occasion, text, tables, or figures are printed incorrectly, constituting errata. Such errata, when discovered, are posted on the AWS web page (www.aws.org).

Official interpretations of any of the technical requirements of this standard may only be obtained by sending a request, in writing, to the appropriate technical committee. Such requests should be addressed to the American Welding Society, Attention: Managing Director, Technical Services Division, 550 N.W. LeJeune Road, Miami, FL 33126 (see Annex H). With regard to technical inquiries made concerning AWS standards, oral opinions on AWS standards may be rendered. These opinions are offered solely as a convenience to users of this standard, and they do not constitute professional advice. Such opinions represent only the personal opinions of the particular individuals giving them. These individuals do not speak on behalf of AWS, nor do these oral opinions constitute official or unofficial opinions or interpretations of AWS. In addition, oral opinions are informal and should not be used as a substitute for an official interpretation.

This standard is subject to revision at any time by the AWS D14 Committee on Machinery and Equipment. It must be reviewed every five years, and if not revised, it must be either reaffirmed or withdrawn. Comments (recommendations, additions, or deletions) and any pertinent data that may be of use in improving this standard are required and should be addressed to AWS Headquarters. Such comments will receive careful consideration by the AWS D14 Committee on Machinery and Equipment and the author of the comments will be informed of the Committee's response to the comments. Guests are invited to attend all meetings of the AWS D14 Committee on Machinery and Equipment to express their comments verbally. Procedures for appeal of an adverse decision concerning all such comments are provided in the Rules of Operation of the Technical Activities Committee. A copy of these Rules can be obtained from the American Welding Society, 550 N.W. LeJeune Road, Miami, FL 33126.

Copyright American Welding Society
Provided by IHS under license with AWS
No reproduction or networking permitted without license from IHS
Licensee=University of Texas Revised Sub Account/5620001114
Not for Resale, 08/29/2012 23:50:47 MDT

This page is intentionally blank.

Copyright American Welding Society
Provided by IHS under license with AWS
No reproduction or networking permitted without license from IHS

Licensee=University of Texas Revised Sub Account/5620001114
Not for Resale, 08/29/2012 23:50:47 MDT

Personnel

AWS D14 Committee on Machinery and Equipment

J. L. Warren, Chair	*CNH America LLC*
L. L. Schweinegruber, Vice Chair	*Robinson Fans, Incorporated*
M. Rubin, Secretary	*American Welding Society*
D. B. Ashley	*Hartford Steam Boiler Inspection and Insurance Company*
B. K. Banzhaf	*CNH America LLC*
M. D. Bell	*Preventive Metallurgy*
T. J. Bruno	*Link-Belt Construction Equipment*
D. J. Landon	*Vermeer Manufacturing Company*
T. J. Landon	*Chicago Bridge & Iron Company*
R. Larsen	*Vermeer Manufacturing Company*
M. R. Malito	*Girard Machine Company, Incorporated*
A. P. Mortale	*Deere and Company*
A. R. Olsen	*ARO Testing, Incorporated*
J. D. Slipke	*Rosenboom Machine and Tool, Incorporated*
W. A. Svekric	*Welding Consultants, Incorporated*
E. G. Yevick	*Weld-Met International Group*

Advisors to the AWS D14 Committee on Machinery and Equipment

P. Collins	*WeldCon Engineering*
R. T. Hemzacek	*Consultant*
B. D. Horn	*Consultant*
D. J. Malito	*Girard Machine Company, Incorporated*
D. C. Martinez	*Danmar Engineering Company, Incorporated*
H. W. Mishler	*Consultant*
J. G. Nelson	*Northrop Grumman*
P. J. Palzkill	*Consultant*
V. R. Zegers	*R E Technical Services, Incorporated*

AWS D14E Subcommittee on Welding of Cranes and Presses

D. B. Ashley, Chair	*Hartford Steam Boiler Inspection and Insurance Company*
W. A. Svekric, 2nd Vice Chair	*Welding Consultants, Incorporated*
M. Rubin, Secretary	*American Welding Society*
D. J. Malito	*Girard Machine Company, Incorporated*
M. R. Malito	*Girard Machine Company, Incorporated*
J. T. McMurtrey	*Bechtel Marine Propulsion Corporation*
E. G. Yevick	*Weld-Met International Group*

Advisors to the AWS D14E Subcommittee on Welding of Cranes and Presses

J. G. Nelson	*Northrop Grumman*
L. Seum	*Sheedy Drayage Company*
J. L. Warren	*CNH America LLC*

Copyright American Welding Society
Provided by IHS under license with AWS
No reproduction or networking permitted without license from IHS
Licensee=University of Texas Revised Sub Account/5620001114
Not for Resale, 08/29/2012 23:50:47 MDT

This page is intentionally blank.

--`,,`,`,`,,,,,,```,,,``,,,`,```,,--`--`,,`,`,`,`,,`---

Copyright American Welding Society
Provided by IHS under license with AWS
No reproduction or networking permitted without license from IHS

Licensee=University of Texas Revised Sub Account/5620001114
Not for Resale, 08/29/2012 23:50:47 MDT

Foreword

This foreword is not part of AWS D14.5/D14.5M:2009, *Specification for Welding of Presses and Press Components*, but is included for informational purposes only.

The specification AWS D14.5/D14.5M addresses a recognized need in the press manufacturing and press repair industries to continue the advance of welding and to increase product reliability. The specification provides manufacturers, fabricators, and repair companies with the minimum acceptable requirements for fabrication, modification, and repair of cyclical press components. The requirements for procedure and welder qualification, workmanship, and prequalified weld joints are emphasized.

This third edition has been edited to include both U.S. Customary and SI Units. Other revisions include updated tables and figures. Contributors who prepared this document and worked to provide a high quality, reliable working document represent manufacturers, users, repair companies, and insurance underwriters.

Underlined text in the subclauses, tables, or figures indicates an editorial or technical change from the 1997 edition. A vertical line in the margin indicates a revision from the 1997 edition.

Comments and suggestions for the improvement of this standard are welcome. They should be sent to the Secretary, AWS D14 Committee on Machinery and Equipment, American Welding Society, 550 N.W. LeJeune Road, Miami, FL 33126.

Copyright American Welding Society
Provided by IHS under license with AWS
No reproduction or networking permitted without license from IHS

Licensee=University of Texas Revised Sub Account/5620001114
Not for Resale, 08/29/2012 23:50:47 MDT

This page is intentionally blank.

Copyright American Welding Society
Provided by IHS under license with AWS
No reproduction or networking permitted without license from IHS

Licensee=University of Texas Revised Sub Account/5620001114
Not for Resale, 08/29/2012 23:50:47 MDT

Table of Contents

Page No.

Personnel v
Foreword vii
List of Tables xii
List of Figures xiii

1. General Provisions 1
1.1 Scope 1
1.2 Normative References 1
1.3 Definitions 2
1.4 Manufacturer's Responsibility 2

2. Classification of Welded Joints and Materials 3
2.1 Classification of Welded Joints 3
2.2 Classification of Materials 3

3. Welding Processes and Consumables 6
3.1 Processes and Methods 6
3.2 Consumables 6
3.3 Practices in Consumable Storage 10

4. Weld Joint Design 10
4.1 Introduction 10
4.2 Weld Joint Nomenclature 10
4.3 Weld Joint Qualification 10
4.4 Groove Welds 11
4.5 Fillet Welds 12
4.6 Plug and Slot Welds 14

5. Design Stresses 14
5.1 General 14
5.2 Fatigue 14

6. Workmanship 15
6.1 General 15
6.2 Preparation of Materials 15
6.3 Assembly 15
6.4 Preheat 15
6.5 Tack Welds 17
6.6 Temporary Welds 17
6.7 Control of Distortion and Shrinkage Stresses 17
6.8 Dimensional Tolerance 17
6.9 Cleaning 17
6.10 Covering of Welds 17
6.11 Weld Quality Requirements 17

7. Qualification 17
7.1 Scope 17
Part A—Procedure Qualification 17
7.2 Qualification of Welding Procedures 17

Copyright American Welding Society
Provided by IHS under license with AWS
No reproduction or networking permitted without license from IHS
Licensee=University of Texas Revised Sub Account/5620001114
Not for Resale, 08/29/2012 23:50:47 MDT

Page No.

7.3 Types of Tests and Purposes 24
7.4 Base Metal and Its Preparation 24
7.5 Position of Test Welds 24
7.6 Welding of Test Samples 30
7.7 Test Specimens—Number, Type, and Preparation 30
7.8 Methods of Testing Specimens 30
7.9 Test Results Required 30
7.10 Records 32
7.11 Retests 32

Part B—Welding Qualification 33
7.12 General 33
7.13 Qualification Tests Required 33
7.14 Limitation of Variables 35
7.15 Groove Weld Plate Qualification Test for Plate of Unlimited Thickness 38
7.16 Groove Weld Plate Qualification Test for Plate of Limited Thickness 38
7.17 Groove Weld Qualification Test for Butt Joints on Pipe and Square or Rectangular Tubing 38
7.18 Groove Weld Qualification Test for T-, Y-, or K- Connections on Pipe and Square or Rectangular Tubing 43
7.19 Fillet Weld Qualification Test for Fillet Welds Only 43
7.20 Position of Test Welds 43
7.21 Base Metal 44
7.22 Test Specimens—Number, Type, and Preparation 44
7.23 Method of Testing Specimens 44
7.24 Test Results Required 47
7.25 Retests 47
7.26 Period of Effectiveness 47
7.27 Records 47

Part C—Welding Operator Qualification 48
7.28 General 48
7.29 Limitation of Variables 48
7.30 Qualification Tests Required 48
7.31 Base Metal 49
7.32 Test Specimens—Number, Type, and Preparation 49
7.33 Method of Testing Specimens 50
7.34 Test Results Required 50
7.35 Retests 50
7.36 Period of Effectiveness 50
7.37 Records 50

Part D—Tack Welder Qualification 50
7.38 General 50
7.39 Limitation of Variables 50
7.40 Qualification Tests Required 51
7.41 Base Metal 51
7.42 Test Specimens—Number, Type, and Preparation 51
7.43 Method of Testing Specimens 51
7.44 Test Results Required 51
7.45 Retest 51
7.46 Period of Effectiveness 51
7.47 Records 52

8. Inspection 52
8.1 Introduction 52
8.2 Visual Inspection 52

Copyright American Welding Society
Provided by IHS under license with AWS
No reproduction or networking permitted without license from IHS
Licensee=University of Texas Revised Sub Account/5620001114
Not for Resale, 08/29/2012 23:50:47 MDT

Page No.

8.3 Radiographic Inspection 56
8.4 Ultrasonic Inspection 64
8.5 Magnetic-Particle Inspection 76
8.6 Liquid Penetrant Inspection 78

9. Modification or Repair 79
9.1 General 79
9.2 General Provisions for Modification or Repair 80
9.3 Defects 80
9.4 Repair of Weld-Related Defects 80
9.5 Repair of Defects in Base Metal 81
9.6 Correction of Distortion and Camber 82
9.7 Correction of Improperly Fitted and Welded Members 83
9.8 Repair Welding of Castings 83
9.9 Repair of Weldments After Machining 83

10. Postweld Treatments 83
10.1 Introduction 83
10.2 Thermal Residual Stress Reduction 83
10.3 Peening 84
10.4 Vibratory Conditioning 84

Annex A (Normative)—Storage and Treatment of Electrodes and Fluxes 85
Annex B (Normative)—Prequalified Welded Joints 87
Annex C (Normative)—Design Guide 107
Annex D (Informative)—Quality Control System 121
Annex E (Informative)—Suggested Qualification Record Forms 123
Annex F (Informative)—Press and Press Components 129
Annex G (Informative)—Informative References 139
Annex H (Informative)—Guidelines for the Preparation of Technical Inquiries 141
List of AWS Documents on Machinery and Equipment 143

Copyright American Welding Society
Provided by IHS under license with AWS
No reproduction or networking permitted without license from IHS
Licensee=University of Texas Revised Sub Account/5620001114
Not for Resale, 08/29/2012 23:50:47 MDT

List of Tables

Table		Page No.
1	Weld Quality Control Requirements	6
2	Material Classification of Qualified Steel	7
3	Allowed Chemical Composition Limits for Steels Prequalified for Welding	9
4	Minimum Weld Size for Fillet and Partial Joint Penetration Groove Welds	11
5	Cross-Sectional Tolerances for Groove Welds	16
6	Minimum Preheat and Interpass Temperatures	16
7a	Matching Filler Metal Requirements (U.S. Customary Table)	19
7b	Matching Filler Metal Requirements (SI Units Table)	20
8	Number and Type of Test Specimens and Range of Thickness Qualified—Procedure Qualification	31
9	Acceptance Criteria for Visual Inspection	37
10	Maximum Weld Reinforcement for Butt Joints in Pipe	38
11	SMAW Electrode Groups	43
12	Welder Qualification—Type and Position Limitations	44
13	Number and Type of Specimens and Range of Thickness Qualified—Welder Qualification	45
14	Standard Hole-Type and Wire Image Quality Indicator Requirements	57
15	Examples of Acceptable Indications	61
16	Limits on Acceptability and Repair of Cut Edge Discontinuities of Plate	82
A.1	Electrodes Covered by AWS A5.1/A5.1M, *Specification for Carbon Steel Electrodes for Shielded Metal Arc Welding*	86
A.2	Electrodes Covered by AWS A5.5/A5.5M, *Specification for Low-Alloy Steel Electrodes for Shielded Metal Arc Welding*	86
C.1	Allowable Static Load on Fillet and Partial Penetration Groove Welds	109
C.2	Allowable Stress in Weld Metal	110
C.3	Stress Categories to Determine Allowable Stress Range	116
C.4	Allowable Stress Range, ksi [MPa]	119
C.5	Double Fillet Weld Size to Develop Full Static Strength of Plate	119

Copyright American Welding Society
Provided by IHS under license with AWS
No reproduction or networking permitted without license from IHS

Licensee=University of Texas Revised Sub Account/5620001114
Not for Resale, 08/29/2012 23:50:47 MDT

List of Figures

Figure		Page No.
1	Classification of Welded Joints	4
2	Details of Fillet Welds	13
3	Positions of Groove Welds	25
4	Positions of Fillet Welds	26
5	Positions of Test Plates for Groove Welds	27
6	Positions of Test Pipe or Tubing for Groove Welds	28
7	Positions of Test Plates for Fillet Welds	29
8	Location of Test Specimens on Welded Test Pipe—2 in or 3 in [50 mm or 75 mm] Diameter	32
9	Location of Test Specimens on Welded Test Pipe—6 in or 8 in [150 mm or 200 mm] Diameter	32
10	Location of Test Specimens on Welded Test Plate—Electroslag and Electrogas Welding—Procedure Qualification	33
11	Location of Test Specimens on Welded Test Plate Over 3/8 in [10 mm] Thick—Procedure Qualification	34
12	Location of Test Specimens on Welded Test Plate 3/8 in [10 mm] Thick and Under—Procedure Qualification	35
13	Fillet Weld Soundness Test for Procedure Qualification	36
14	Test Plate for Unlimited Thickness—Welder Qualification	38
15	Optional Test Plate for Unlimited Thickness—Horizontal Position—Welder Qualification	39
16	Test Plate for Limited Thickness, All Positions—Welder Qualification	39
17	Optional Test Plate for Limited Thickness, Horizontal Position—Welder Qualification	40
18	Fillet Weld Break and Macroetch Test Plate—Welder Qualification—Option 1	40
19	Fillet Weld Root Bend Test Plate—Welder Qualification—Option 2	41
20	Pipe Test Butt Joint without Backing—Welder Qualification	42
21	Pipe Test Butt Joint with Backing—Welder Qualification	42
22	Test Joint for T-, Y-, and K-Connections on Pipe or Tubing—Welder Qualification	42
23	Location of Test Specimens on Welded Test Pipe—Welder Qualification	46
24	Test Plate for Unlimited Thickness—Welding Operator Qualification	48
25	Butt Joint for Electroslag and Electrogas—Welding Operator Qualification	49
26	Fillet Weld Break Specimen—Tack Welder Qualification	51
27	Method of Fracturing Fillet Weld Break Specimen—Tack Welder Qualification	51
28	Cracks in Welded Joints	53
29	Acceptable and Unacceptable Weld Profiles	54
30	Radiographic Identification and Hole-Type or Wire IQI Locations on Approximately Equal Thickness Joints 10 in [250 mm] and Greater in Length	57
31	Radiographic Identification and Hole-Type or Wire IQI Locations on Approximately Equal Thickness Joints Less Than 10 in [250 mm] in Length	58
32	Radiographic Identification and Hole-Type or Wire IQI Locations on Transition Joints 10 in [250 mm] and Greater in Length	59
33	Radiographic Identification and Hole-Type or Wire IQI Locations on Transition Joints Less Than 10 in [250 mm] in Length	60
34	Aligned Rounded Indications	62
35	Groups of Aligned Rounded Indications	62
36	Charts for Thickness t Equal to 1/8 in to 1/4 in [3 mm to 6 mm], Inclusive	63
37	Charts for Thickness t Over 1/4 in to 3/8 in [6 mm to 10 mm], Inclusive	63
38	Charts for Thickness t Over 3/8 in to 3/4 in [10 mm to 20 mm], Inclusive	64

Copyright American Welding Society
Provided by IHS under license with AWS
No reproduction or networking permitted without license from IHS

Licensee=University of Texas Revised Sub Account/5620001114
Not for Resale, 08/29/2012 23:50:47 MDT

Figure **Page No.**

39 Charts for Thickness t Over 3/4 in to 2 in [20 mm to 50 mm], Inclusive 65
40 Charts for Thickness t Over 2 in to 4 in [50 mm to 100 mm], Inclusive 66
41 Charts for Thickness t Over 4 in [100 mm] 67
42 70° Calibration Standard 68
43 60° Calibration Standard 69
44 45° Calibration Standard 70
45 Typical Screen Calibration 71
46 Test Procedure—Butt Joint Welds 72
47 Method of Detecting Longitudinal Discontinuities in Butt Joint Welds Not Ground Flush 73
48 Method of Detecting Longitudinal Discontinuities in Butt Joint Welds Ground Flush 73
49 Method of Detecting Longitudinal Discontinuities in Corner Welds Not Ground Flush 74
50 Procedure for Testing T-Joint Welds 75
51 Method of Using Procedure for Testing T-Joint Welds 75
52 Edge Discontinuities in Cut Material 81
B.1 Prequalified Complete Joint Penetration Groove Welded Joints 87
B.2 Prequalified Partial Joint Penetration Groove Welded Joints 98
C.1 Typical Groove Welds 108
C.2 Typical Fillet Welds 109
C.3 Illustrative Examples for Table C.3 111
C.4 Design Stress Range Curves for Categories A to F Redundant Structures 114
C.5 Design Stress Range Curves for Categories A to F Nonredundant Structures 114
C.6 Graphic Representation of Allowable and Working Stresses Under Cyclic Loading Conditions 115
F.1 Typical Frame Press 130
F.2 Typical Press Loading 131
F.3 Typical Mechanical Press 132
F.4 Typical Hydraulic Press 133
F.5 Typical Injection Molding Press 134
F.6 Typical Horizontal Hydraulic Extrusion Press 134
F.7 Typical Welded Gear Drive Types 135
F.8 Typical Drive Mechanism 136
F.9 Styles of Presses 137

List of Forms

Form **Page No.**

E.1 Sample Welding Procedure Specification (WPS) 124
E.2 Sample Procedure Qualification Record (PQR) 126
E.3 Sample Welder and Welding Operator Qualification Test Record 127

Copyright American Welding Society
Provided by IHS under license with AWS
No reproduction or networking permitted without license from IHS
Licensee=University of Texas Revised Sub Account/5620001114
Not for Resale, 08/29/2012 23:50:47 MDT

Specification for Welding of Presses and Press Components

1. General Provisions

1.1 Scope. The purpose of this specification is to establish minimum acceptable requirements for weld joint design and the fabrication by welding of presses and press components, and is not intended to apply to material feed mechanisms and tooling. It shall also apply to the modification or repair by welding of new or existing presses or press components. Its intent is to promote the following:

(1) High-quality construction and repair of presses;

(2) Adequate initial and sustained performance of equipment;

(3) Personnel and equipment safety;

(4) Clear, concise fabrication practices that will be readily understood by the manufacturer, fabricator, buyer, and user;

(5) The Manufacturer, Fabricator, and Repair Organization shall have and maintain a welding quality program that will establish that all requirements of this specification will be met. A recommended welding quality program is outlined in Annex D.

This specification establishes the minimum acceptable practice at the time of its publication. It is not intended to restrict new developments or in any way to inhibit advances in the art of welding.

This specification makes use of both U.S. Customary Units and the International System of Units (SI). The measurements may not be exact equivalents; therefore each system shall be used independently of the other without combining in any way. The specification with the designation D14.5 uses U.S. Customary Units. The specification D14.5M uses SI Units. The latter are shown in appropriate columns in tables and figures or within brackets [ ]. Detailed dimensions on figures are in inches. A separate tabular form that relates the U.S. Customary Units with SI Units may be used in tables and figures.

Safety and health issues and concerns are beyond the scope of this standard, and therefore are not fully addressed herein. Safety and health information is available from other sources, including, but not limited to, ANSI Z49.1, *Safety in Welding, Cutting, and Allied Processes*, and applicable federal and state regulations.

1.2 Normative References. The following standards contain provisions which, through reference in this text, constitute mandatory provisions of this AWS standard. For undated references, the latest edition of the referenced standard shall apply. For dated references, subsequent amendments to, or revisions of, any of these publications do not apply.

Informative references (found in nonmandatory language or elements) are shown in Annex G.

AWS Standards[1]

ANSI Z49.1, *Safety in Welding, Cutting, and Allied Processes*;

AWS A2.4, *Standard Symbols for Welding, Brazing, and Nondestructive Examination*;

AWS A3.0, *Standard Welding Terms and Definitions*;

AWS A5.1/A5.1M, *Specification for Carbon Steel Electrodes for Shielded Metal Arc Welding*;

AWS A5.5/A5.5M, *Specification for Low-Alloy Steel Electrodes for Shielded Metal Arc Welding*;

AWS A5.01, *Filler Metal Procurement Guidelines*;

AWS A5.17/A5.17M, *Specification for Carbon Steel Electrodes and Fluxes for Submerged Arc Welding*;

AWS A5.18/A5.18M, *Specification for Carbon Steel Filler Metals for Gas Shielded Arc Welding*;

[1] AWS standards are published by the American Welding Society, 550 N.W. LeJeune Road, Miami, FL 33126.

Copyright American Welding Society
Provided by IHS under license with AWS
No reproduction or networking permitted without license from IHS
Licensee=University of Texas Revised Sub Account/5620001114
Not for Resale, 08/29/2012 23:50:47 MDT

AWS A5.20/A5.20M, *Specification for Carbon Steel Electrodes for Flux Cored Arc Welding*;

AWS A5.23/A5.23M, *Specification for Low Alloy Steel Electrodes and Fluxes for Submerged Arc Welding*;

AWS A5.28/A5.28M, *Specification for Low Alloy Steel Electrodes for Gas Shielded Metal Arc Welding*;

AWS A5.29/A5.29M, *Specification for Low Alloy Steel Electrodes for Flux Cored Arc Welding*;

AWS A5.32/A5.32M, *Specification for Welding Shielding Gases*;

AWS B2.1 *Specification for Welding Procedure and Performance Qualification*;

AWS B4.0, *Standard Methods for Mechanical Testing of Welds*; and

AWS B4.0M, *Standard Methods for Mechanical Testing of Welds*.

ASTM Standards[2]

ASTM A 370, *Test Methods and Definitions for Mechanical Testing of Steel Products*;

ASTM A 435, *Specification for Straight-Beam Ultrasonic Examination of Steel Plates*;

ASTM E 94, *Standard Guide for Radiographic Testing*;

ASTM E 709, *Standard Guide for Magnetic Particle Examination*;

ASTM E 747, *Standard Practice for Design, Manufacture, and Material Grouping Classification of Wire Image Quality Indicators (IQI) Used for Radiology*;

ASTM E 1025, *Standard Practice for Design, Manufacture, and Material Grouping Classification of Hole-Type Image Quality Indicators (IQI) Used for Radiology*; and

ASTM E 1032, *Standard Test Method for Radiographic Examination of Weldments*.

ASNT Specifications[3]

SNT-TC-1A, *Recommended Practice, Supplement A, Radiography*;

SNT-TC-1A, *Recommended Practice, Supplement B, Magnetic Particle*;

SNT-TC-1A, *Recommended Practice, Supplement C, Ultrasonic Testing Method*; and

SNT-TC-1A, *Recommended Practice, Supplement D, Liquid Penetrant*.

1.3 Definitions. The welding terms used in this code shall be interpreted in conformance with the definitions given in the latest edition of AWS A3.0, *Standard Welding Terms and Definitions*, supplemented by the following definitions:

Engineer. The responsible technical authority.

Fabricator. The person, shop, or agency performing the actual welding. The person may be employed by the Manufacturer's company or the Fabricator may be an independent shop doing work on a subcontract basis.

Inspector. The person designated by the manufacturer, owner, or repair service who shall ascertain that all fabrication by welding is performed in conformance to the requirements of this Specification

Manufacturer. The person, company, or agency responsible for the design and performance of a press or press component.

piping porosity. Elongated porosity whose major dimension lies in a direction approximately normal to the weld surface. Frequently it is referred to as "pin holes" when the porosity extends to the surface.

press. A machine comprised of mechanical or hydraulic devices for applying forces that are contained within the frame of the machine.

Purchaser or Owner. The person, company, or agency that purchases the press.

Repair Service. The organization that provides repair or modification to a press or press component for the press user.

User. The person, company, or agency that utilizes the press.

1.4 Manufacturer's Responsibility. The Manufacturer's responsibility with respect to this specification shall include the following:

(1) Ensuring that all aspects of design and welding are in conformance to this specification.

(2) Ensuring that welding and nondestructive examination symbols are in conformance with the latest edition of AWS A2.4, *Standard Symbols for Welding, Brazing, and Nondestructive Examination*.

[2] ASTM standards are published by the American Society for Testing and Materials, 100 Barr Harbor Drive, West Conshohocken, PA 19428-2959.

[3] ASNT standards are published by the American Society for Nondestructive Testing, 1711 Arlingate Lane, P.O. Box 28518, Columbus, OH 43228-0518.

Copyright American Welding Society
Provided by IHS under license with AWS
No reproduction or networking permitted without license from IHS

Licensee=University of Texas Revised Sub Account/5620001114
Not for Resale, 08/29/2012 23:50:47 MDT

(3) Detailing joint preparation and ensuring joint compatibility with applied processes and materials employed.

(4) Selecting processes for all welds.

(5) Establishing written welding procedure specifications (WPSs) qualified in accordance with Clause 7, Qualification, to ensure uniform practice. Each WPS shall list values for each variable for the welding process used (see 7.2), including but not limited to electrode size, welding travel speed, current range for electrode size.

(6) Ensuring the standards of workmanship applied to all welds and welding procedures conform to Clause 6, Workmanship.

(7) Maintaining records of all welder and procedure qualification tests pertaining to welding control.

(8) Ensuring that only personnel qualified in accordance with Clause 7, Qualification, perform welding.

2. Classification of Welded Joints and Materials

2.1 Classification of Welded Joints. Welded joints are divided into the following six classifications based upon the design of the joint and anticipated performance (see Figure 1). Each joint class is also rated for maximum allowable stress levels (see 7.2.4 and Table C.3).

2.1.1 Joint Class I. This class consists of complete groove weld penetration of butt joints, welded from one or both sides. Two-sided welds have the root of the first side chipped, gouged, or ground to sound metal before depositing the second side. Single-sided welds that are made using backing tape, fusible flux backing material, or a nonfusible backing bar, and a back weld to obtain a completely fused root do not require backgouging of the root side of the first weld. Weld surfaces shall have all weld reinforcement ground or machined flush with the direction of removal parallel to the principal stress. Finished joints shall be nondestructively tested according to Table 1 and Clause 8, Inspection, and the results recorded. Use of backing tape, fusible flux backing material, or a nonfusible backing bar requires qualification.

2.1.2 Joint Class II. This class consists of complete joint penetration butt, T-, or corner joint welded from both sides, with the root of the first side chipped, gouged, or ground back to sound metal before depositing the second side. Welds that are made using backing tape, fusible flux backing material, or a nonfusible backing bar, and a back weld to obtain a completely fused root do not require backgouging of the other side of the weld. Finished joints shall be nondestructively tested according to Table 1 and Clause 8, Inspection, and the results recorded. Use of backing tape, fusible flux backing material, or a nonfusible backing bar requires qualification.

2.1.3 Joint Class III. This class is a complete groove weld penetration of butt, T-, or corner joint, welded from both sides, or from one side using a backing strip that is not removed after welding. The inside corners of double-welded T- and corner joints may be reinforced with a fillet weld. Finished joints shall be nondestructively examined according to Table 1 and Clause 8, Inspection, and the results recorded.

2.1.4 Joint Class IV. This class is a complete groove weld penetration of butt, T-, or corner joint, welded from one side without the use of backing; a partial groove weld penetration of butt, T-, or corner joint welded on both sides; or a lap, T-, or corner joint fillet welded on both sides. The inside corners of groove welded T- and corner joints may be reinforced with a fillet weld. See Table 1 and Clause 8, Inspection, for inspection requirements.

2.1.5 Joint Class V. This class consists of partial groove weld penetration of butt, T-, or corner joints, welded on one side; a fillet-, plug- or slot-welded lap, T-, or corner joint welded on one side. See Table 1 and Clause 8, Inspection, for inspection requirements.

2.1.6 Joint Class VI. This class consists of butt, T-, corner, lap, or edge joints, made without special joint preparation, welded with a fillet, plug, or edge weld; welded joints of secondary importance not subject to dynamic loading; welds of secondary importance in strength. See Table 1 and Clause 8, Inspection, for inspection requirements.

2.1.7 Intermittent Welded Joints. Intermittent partial joint penetration welds in butt, T-, and corner joints and intermittent welded lap joints and plug welds are placed in Joint Class V or VI.

2.1.8 Quality Control Requirements. Table 1 indicates the inspection requirements for weld Joint Classes I through VI. Information furnished to the bidder shall identify the extent of inspection to be performed.

2.2 Classification of Materials

2.2.1 Base Metals. The steels listed in Table 2 are prequalified for welding without further weld qualification. These steels used as base metal in the manufacture of press weldments are divided into five classifications, Material Class I through Material Class V, according to their weldability and minimum preheat and interpass temperature requirements.

Copyright American Welding Society
Provided by IHS under license with AWS
No reproduction or networking permitted without license from IHS

Licensee=University of Texas Revised Sub Account/5620001114
Not for Resale, 08/29/2012 23:50:47 MDT

JOINT CLASS	CONFIGURATION OF WELDED JOINTS		
I			
II	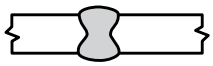	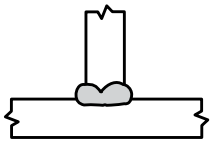	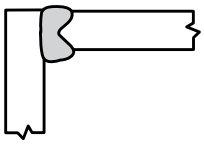
III	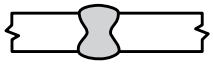	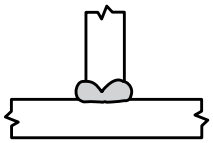	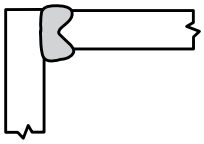
	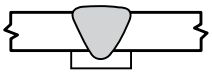	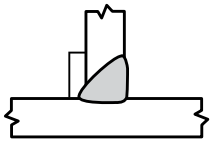	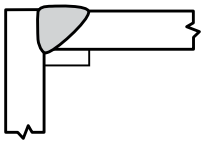
IV	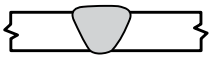	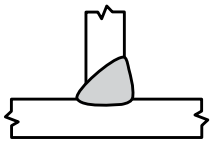	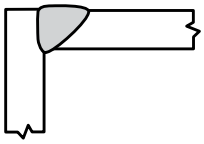
	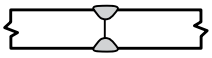	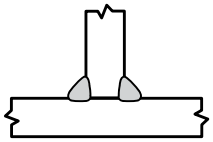	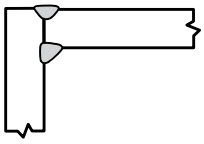
	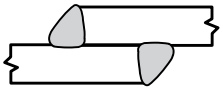	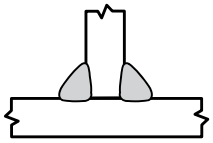	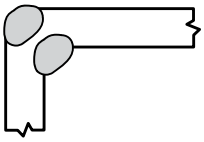

Note: Load applications are not significant within good engineering practices.

Figure 1—Classification of Welded Joints

Copyright American Welding Society
Provided by IHS under license with AWS
No reproduction or networking permitted without license from IHS

Licensee=University of Texas Revised Sub Account/5620001114
Not for Resale, 08/29/2012 23:50:47 MDT

JOINT CLASS	CONFIGURATION OF WELDED JOINTS		
V	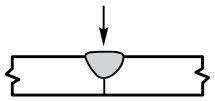	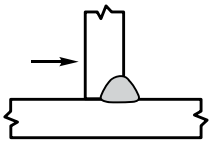	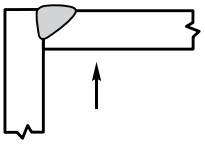
	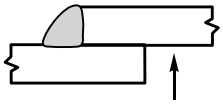	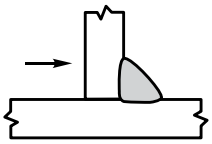	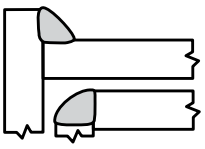
	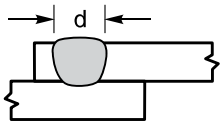	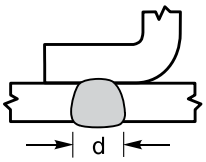	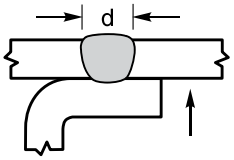
VI	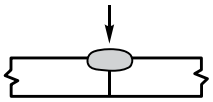		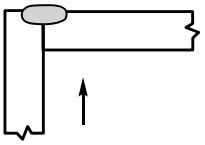
	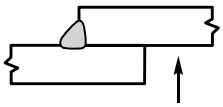	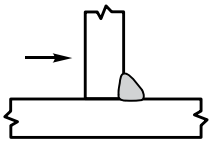	
	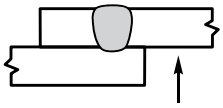	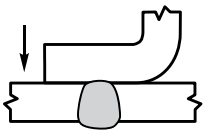	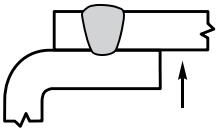
	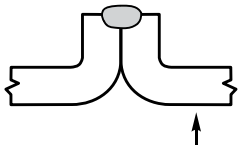		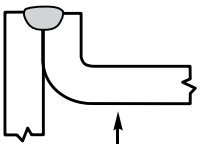

Note: Avoid loading the joint in the arrow direction.

Figure 1 (Continued)—Classification of Welded Joints

Copyright American Welding Society
Provided by IHS under license with AWS
No reproduction or networking permitted without license from IHS

Licensee=University of Texas Revised Sub Account/5620001114
Not for Resale, 08/29/2012 23:50:47 MDT

Table 1
Weld Quality Control Requirements

Weld Joint Class (see 2.1)	Ultrasonic (8.4) or Radiographic (8.3) Inspection	Magnetic Particle (8.5) or Liquid Penetrant (8.6) Inspection	Visual [a,b] Inspection (8.2)	
			Discontinuities Table 13	Dimensions (8.2.7)
I	Yes	Yes	Yes	Yes
II	Yes (10%)	Yes	Yes	Yes
III	—	Yes	Yes	Yes
IV	—	—	Yes	Yes
V	—	—	Yes	Yes
VI	—	—	Yes	Yes

[a] 100% inspection is required unless otherwise indicated.
[b] Material subject to delayed cracking such as ASTM A 514 and A 517 shall have inspections performed not less than 48 h after the completed weld has cooled down to ambient temperatures.

In addition to the prequalified steels listed in Table 2, steels having a weldability equivalent to the steels listed are to be considered prequalified for welding. Steels having equivalent weldability within a given Material Class are defined as steels which meet all limits for that class as shown in Table 3.

2.2.1.1 Base Metal Limitations. The provisions of this specification are intended for use with steels having a minimum estimated or specified yield strength less than or equal to 110 000 psi [760 MPa]. The steels listed in Table 2 satisfy this requirement.

All groove and fillet weld procedures for weld metal and base metal with a minimum estimated or specified yield strength of 90 000 psi [620 MPa] or higher not listed in Table 2 shall be qualified prior to use by tests provided in 7.3.

2.2.1.2 Material Properties. Table 2 shows either the estimated minimum or the specified tensile and yield strengths for the prequalified steels listed.

Table 3 shows the maximum tensile strength and chemical composition for steels in Material Class I through Material Class V.

For nonprequalified steels, the manufacturer shall establish the minimum tensile and yield strengths for design purposes by reference to published data or from test data. The minimum tensile and yield strengths for design purposes shall be established for a nonprequalified steel with due regard for size effects, thermal or mechanical treatments, and the effect of the welding process on the base material in the heat-affected zone (HAZ).

2.2.2 Other Base Metals. Steels not specifically prequalified in 2.2.1 shall be qualified according to Clause 7, Qualification. When so qualified, these steels may be used in the manufacture or repair of alloy steel fabrications, forgings, and castings.

3. Welding Processes and Consumables

3.1 Processes and Methods

3.1.1 All welding processes and methods recognized by AWS A3.0, *Standard Welding Terms and Definitions*, may be used in the fabrication, construction, and repair of presses and press components. All recognized welding processes and methods used shall conform to Clause 7, Qualification.

3.1.2 Welding processes and methods not recognized by the American Welding Society (AWS) must meet the requirements of, and shall be qualified by, Clause 7, Qualification, if they are to be used in fabrication, construction, and repair of presses and press components.

3.2 Consumables. Consumables include materials such as filler metal, shielding gas, and flux that are used to produce a finished weld joint.

3.2.1 Consumable Qualification. Consumables purchased to the requirements of AWS filler metal specifications need not be tested or qualified for welding. Other consumables shall be considered qualified if the manufacturer's certification states that desired weld metal mechanical properties and chemical compositions are attained.

Copyright American Welding Society
Provided by IHS under license with AWS
No reproduction or networking permitted without license from IHS
Licensee=University of Texas Revised Sub Account/5620001114
Not for Resale, 08/29/2012 23:50:47 MDT

Table 2
Material Classification of Qualified Steel

Material Class[a]	Steel Specification and Grade			Tensile Strength ksi [MPa]	Yield Strength ksi [MPa]
I	AISI/SAE[b, c, d]				
	1005	Sheet, Plate Bar or Casting (Usually Specified by Compression Only—without Mechanical Properties)	Hot Rolled	42 [290]	23.5 [162]
	1006		Hot Rolled	43 [295]	24 [165]
	1008		Hot Rolled	44 [305]	24.5 [170]
	1010		Hot Rolled	47 [325]	26 [180]
	1012		Hot Rolled	48 [330]	26.5 [183]
	1013		Hot Rolled	49 [340]	27 [186]
	1015		Hot Rolled	50 [345]	27.5 [190]
	1016		Hot Rolled	55 [380]	30 [205]
	1017		Hot Rolled	53 [365]	29 [200]
	1018		Hot Rolled	58 [500]	32 [220]
	1020		Hot Rolled	55 [320]	30 [205]
	1021		Hot Rolled	61 [420]	33 [230]
	1025		Hot Rolled	58 [400]	32 [220]
II	ASTM[e]				
	A 27	Grade N-1 Castings Chemistry Only		Not Specified	See 2.2.1.2
		Grade 60-30		60 [415]	30 [205]
		Grade 65-35		65 [450]	35 [240]
	A 36	Shapes, Plate, Bar		58–80 [400–550]	36 [250]
	A 53	Grade B Pipe		60 [415]	35 [240]
	A 106	Grade B Pipe		60 [415]	35 [240]
	A 131	Grade A, B, D, CS, DS Shipbuilding Shapes, Plate, Bars		58–71 [400–490]	34 [235]
	A 139	Grade A Pipe		48 [331]	30 [205]
		Grade B		60 [414]	35 [241]
		Grade C		60 [414]	42 [290]
		Grade D		60 [414]	46 [317]
		Grade E		66 [455]	52 [359]
	A 284	Grade C through 2 in [50 mm] Plate		60 [415]	30 [205]
		Grade D through 2 in [50 mm]		60 [415]	33 [230]
	A 381	Grade Y35 Pipe		60 [414]	35 [240]
	A 500	Grade A Tubing		45 [310]	33 [288]
		Grade B		58 [400]	42 [290]
	A 501	Tubing		58 [400]	36 [250]
	A 515	Grade 55 through 8 in [200 mm] Plate		55–75 [380–515]	30 [205]
	A 516	Grade 55 through 8 in [200 mm] Plate		55–75 [380–515]	30 [205]
	A 524	Grade I through 0.375 in [10 mm] Pipe		60–85 [414–586]	35 [240]
		Grade II Above 0.375 in [10 mm] Wall		55–80 [380–550]	30 [205]
	A 570	Grade 36 Sheet to 0.229 in [6 mm]		53 [380]	36 [250]
	A 573	Grade 58 Plate to 1.5 in [40 mm]		58–71 [400–490]	32 [220]
		Grade 65 Plate to 1.5 in [40 mm]		65–77 [450–530]	35 [240]
	A 662	Grade A Plate to 1.5 in [40 mm]		58–78 [400–540]	40 [275]
		Grade B Plate to 1.5 in [40 mm]		65–85 [400–585]	40 [275]
	A 709	Grade 36 Shapes, Plate, Bar		58–80 [400–550]	36 [250]
	API[f]				
	5L	Grade B Pipe		60 [410]	35 [240]
III	AISI/SAE[b, c, d, g]				
	1030	Sheet, Plate, Bar or Casting (Usually Specified by Composition Only—without Mechanical Properties)		68 [470]	37.5 [260]

(Continued)

Copyright American Welding Society
Provided by IHS under license with AWS
No reproduction or networking permitted without license from IHS
Licensee=University of Texas Revised Sub Account/5620001114
Not for Resale, 08/29/2012 23:50:47 MDT

Table 2 (Continued)
Material Classification of Qualified Steel

Material Class[a]	Steel Specification and Grade			Tensile Strength ksi [MPa]	Yield Strength ksi [MPa]
III (Cont'd)	ASTM[e]				
	A 27	Grade N-2 Castings Heat-Treated		(Not specified)	See 2.2.1.2
		Grade 70-36		70 [485]	36 [250]
		Grade 70-40		70 [485]	40 [275]
	A 106	Grade C Pipe		70 [485]	40 [275]
	A 131	Grades AH32, DH32, EH32,	Shipbuilding Shapes, Plate, Bars	68–85 [470–585]	46 [315]
		AH36, DH36, EH36		71–90 [490–620]	51[360]
	A 284	Grade C 2 in–4 in [100 mm–200 mm] Plate		60 [415]	30 [205]
		Grade D 2 in–4 in [100 mm–200 mm] Plate		60 [415]	33 [230]
	A 500	Grade C Round Tubing		62 [427]	46 [317]
		Grade C Shaped Tubing		62 [427]	50 [345]
	A 515	Grade 60 through 2 in [50 mm] Plate		60–80 [415–550]	32 [220]
		Grade 65 through 2 in [50 mm] Plate		65–85 [450–585]	35 [240]
	A 516	Grade 60 through 2 in [50 mm] Plate		60–80 [415–550]	32 [220]
		Grade 65 through 2 in [50 mm] Plate		65–85 [450–585]	35 [240]
	A 537	Class 1, through 2.5 in [65 mm] Plate		70–90 [485–620]	50 [345]
	A 572 HSLA Cb-V Steels	Grade 42 to 2 in [50 mm]	Shapes, Plate, Sheet, and Bar	60 [415]	42 [290]
		Grade 50 0.5 in to 5 in [13 mm to 125 mm]		65 [450]	50 [345]
		Grade 50 0.5 in to 2 in [13 mm to 50 mm]		65 [450]	50 [345]
	A 588	Grades A, B, C, and K 4 in [100 mm] and Under	Shapes, Plate, and Bar	70 [485]	50 [345]
	A 606	Type 2 & 4 Sheet to 0.180 in [5 mm] Weathering Steel	As-Rolled Cut Lengths	70 [485]	50 [345]
		All Other Coils & Cut Lengths		65 [450]	45 [310]
	A 607	Type 1 Class 2 Sheet to 0.180 in [5 mm] HSLA Nonweathering	Grade 45	60 [410]	45 [310]
			Grade 50	65 [450]	50 [340]
	A 618	HSLA Structural Tubing	Grade II	70 [485]	50 [345]
		Wall to 3/4 in [19 mm]	Grade II	67 [460]	46 [315]
		Wall to 3/4 in to 1.5 in [19 mm to 38 mm]	Grade III	65 [450]	50 [345]
	A 633 HSLA Normalized Structural	Plate to 4 in [100 mm]	Grade A	63–83 [430–570]	42 [290]
		through 2.5 in [65 mm]	Grades C & D	70–90 [485–620]	50 [345]
		2.5 in–4 in [65 mm–100 mm]	Grades C & D	65–85 [450–590]	46 [315]
	A 662	Grade B PV Plate Mod and Low Temperature Applications		65–85 [450–590]	40 [275]
	A 709	Nonweathering Grade 50	Structural Shapes, Plate, Bars–Bridges	65 [450]	50 [345]
		Weathering Grade 50W		70 [485]	50 [345]
	API[f]				
	5LX	Grade 42 High-Strength Pipe		60 [410]	42 [290]
IV	ASTM[e]				
	A 284	Grade C, 4 in–12 in [100 mm–300 mm] Plate		60 [415]	30 [205]
		Grade D, 4 in–8 in [100 mm–200 mm] Plate		60 [415]	33 [230]
	A 515	Grade 60, Over 2 in [50 mm] Plate		60–80 [415–550]	32 [220]
		Grade 65, Over 2 in [50 mm] Plate		65–85 [450–585]	35 [240]
	A 516	Grade 60, Over 2 in [50 mm] Plate		60–80 [415–550]	32 [220]
		Grade 65, Over 2 in [50 mm] Plate		65–85 [450–585]	35 [240]
	A 537	Class 2, through 2.5 in [65 mm] Plate		80–100 [550–690]	60 [415]
	A 572	Grade 60 to 1.25 in [32 mm]	Shapes, Plate, Sheet, and Bar	75 [520]	60 [415]
		Grade 65 to 1.25 in [32 mm]		80 [550]	65 [450]

(Continued)

Copyright American Welding Society
Provided by IHS under license with AWS
No reproduction or networking permitted without license from IHS
Licensee=University of Texas Revised Sub Account/5620001114
Not for Resale, 08/29/2012 23:50:47 MDT

Table 2 (Continued)
Material Classification of Qualified Steel

Material Class[a]	Steel Specification and Grade			Tensile Strength ksi [MPa]	Yield Strength ksi [MPa]
IV (Cont'd)	A 607 HSLA Nonweathering	Grade 60	Type 1 Class 2 Sheet to 0.180 in [5 mm]	75 [520]	60 [410]
		Grade 65		80 [550]	65 [450]
	A633 HSLA	Grade E, through 4 in [100 mm]	Normalized Structural Plate	80–100 [550–690]	60 [415]
		Grade E, 4 in to –6 in [100 mm to –150 mm]		80–100 [550–690]	55 [380]
V	ASTM[e]				
	A 514 HSLA	to 2.5 in [65 mm]	Q & T Plate	110–130 [760–895]	100 [690]
		>2.5 in to 6 in [65 mm–150 mm]		100–130 [690–895]	90 [620]
	A 517 HSLA	to 2.5 in [65 mm]		110–130 [760–895]	100 [690]
		>2.5 in to –6 in [65 mm–150 mm]		100–130 [690–895]	90 [620]
	A 709 HSLA	to 2.5 in [65 mm]	Q & T Plate Grades 100 & 100 W	110–130 [760–895]	100 [690]
		2.5 in–4 in [65 mm–150 mm]		100–130 [690–895]	90 [620]

[a] Materials Class I steels are the most weldable, and Material Class V steel the most difficult to weld of the steels listed.
[b] All tensile and yield strength values for AISI/SAE steels are *estimated minimum values*.
[c] Hardness is not to exceed 160 Brinell for the AISI/SAE steels listed under Material Class I. These same AISI/SAE steels should be placed in a higher Weldability Class (see Table 3) when hardness exceeds 160 Brinell (ultimate strength greater than 80 000 psi).
[d] See 2.2.1.2 for tensile-yield property determination for AISI/SAE steels.
[e] All Tensile and yield strength values listed for ASTM steels are specified by the ASTM standard.
[f] API = American Petroleum Institute.
[g] Hardness is not to exceed 180 Brinell for the AISI/SAE steel listed under Material Class III. This same AISI/SAE steel should be placed in a higher Material Class (see Table 3) when hardness exceeds 180 Brinell (ultimate strength greater than 90 000 psi [630 MPa]).

Table 3
Allowed Chemical Composition Limits for Steels Prequalified for Welding

Material Class	Material Class I	Material Class II	Material Class III	Material Class IV	Material Class V
Maximum Ultimate Tensile Strength, ksi [MPa]	80 [550]	85 [585]	90 [620]	100 [690]	135 [930]
Carbon equivalent[a], max.	0.38	0.48	0.63	0.54	0.74
Carbon %, max.	0.23	0.30	0.24	0.26	0.22
Manganese %, max.	0.90	1.35	1.35	1.65	1.50
Phosphorus %, max.	0.04	0.04	0.04	0.035	0.035
Sulfur %, max.	0.05	0.05	0.05	0.05	0.05
Silicon %, max.	0.60	0.60	0.90	0.30	0.90
Nickel %, max.	Note b	Note b	1.25	0.25[b]	1.50
Chromium %, max.			1.00	0.20[b]	2.00
Molybdenum %, max.			0.25	0.06[b]	0.65
Vanadium %[c], max.			0.10[d]	0.15	0.08
Titanium %, max.			0.07	0.07	0.10
Zirconium %, max.			0.15	0.15	0.15
Niobium % (Columbium %), max.			0.04[d]	Note b	Note b
Copper %, max.			1.00	0.35[b]	0.50
Boron %, max.				0.0005[b]	0.006

[a] Carbon equivalent = C + Mn/6 + Mo/4 + Cr/5 + Ni/15 + V/5.
[b] Residual quantities only, maximum values are Ni = 0.25, Cr = 0.20, Cu = 0.35, Mo = 0.06, B = 0.0005; Cb is not specified.
[c] **Caution:** The filler metal or the base metal should not exceed 0.05% vanadium if the welds are to be thermally stress relieved because of the decrease in fracture toughness.
[d] Maximum for niobium (columbium) + vanadium = 0.10.

Copyright American Welding Society
Provided by IHS under license with AWS
No reproduction or networking permitted without license from IHS
Licensee=University of Texas Revised Sub Account/5620001114
Not for Resale, 08/29/2012 23:50:47 MDT

3.2.2 Mechanical Property Determination. The mechanical properties of as-deposited weld metal specified in the appropriate standards shall be obtained from all-weld-metal tension specimens. (Refer to AWS B4.0 or B4.0M, *Standard Methods for Mechanical Testing of Welds*.)

3.2.3 Practices in Consumable Use. The practices recommended by the consumable manufacturer shall be followed.

3.2.3.1 Filler Metal. Electrodes having low-hydrogen coatings conforming to AWS A5.1/A5.1M, *Specification for Carbon Steel Electrodes for Shielded Metal Arc Welding*, or AWS A5.5/A5.5M, *Specification for Low-Alloy Steel Electrodes for Shielded Metal Arc Welding*, shall be supplied in hermetically sealed containers. If not provided in hermetically sealed containers, consumables shall be dried in accordance with Annex A or manufacturer's recommendations.

3.2.3.2 Fluxes. Fluxes used for submerged arc welding (SAW) shall be dry and free of contamination from dirt, mill scale, or other foreign material.

All flux shall be supplied in packages capable of being stored under normal conditions for at least six months without such storage affecting its welding characteristics or weld properties.

3.2.3.3 Recrushed Slag. Flux containing recrushed slag may be used, provided it has its own marking, using the supplier's name and trade designation. In addition, each dry batch or dry blend (lot) of flux containing recrushed slag, as defined in AWS A5.01, *Filler Metal Procurement Guidelines*, shall be tested in accordance with Schedule I of AWS A5.01 and classified by the supplier per AWS A5.17/A5.17M, *Specification for Carbon Steel Electrodes and Fluxes for Submerged Arc Welding,* or A5.23/A5.23M, *Specification for Low Alloy Steel Electrodes and Fluxes for Submerged Arc Welding,* as applicable.

3.2.3.4 Gases. A gas or gas mixture used for shielding shall conform to the requirements of AWS A5.32/A5.23M, *Specification for Welding Shielding Gases*. When requested, the gas manufacturer shall furnish certification that the gas or gas mixture is suitable for the intended application and will meet the dew point requirement.

3.3 Practices in Consumable Storage. Consumables shall be protected and stored so that their characteristics or welding properties are not adversely affected. Consumable manufacturer's specific recommendations shall be applied. Annex A contains general practices for storage and the use of SMAW, FCAW, GMAW, and SAW consumables employed for application within the scope of this specification.

3.3.1 Filler Metal. Electrodes and hermetically sealed containers of low-hydrogen electrodes shall be properly labeled and identified and shall be stored in a dry, organized storeroom. Opened containers of low-hydrogen electrodes shall be stored in ovens according to Annex A.

3.3.2 Fluxes. Fluxes shall be stored in a dry storeroom, well protected from weather effects, preferably in their original containers. The proper identification and labeling shall be maintained. Fluxes shall be dried, if required, before use, according to Annex A. All fluxes that have become fused, oily, or dirty shall be discarded.

3.3.3 Gases. The storage and labeling of welding gas containers shall follow the recommendations of the gas supplier and comply with local and federal codes.

4. Weld Joint Design

4.1 Introduction. This clause describes various weld joints used to fabricate presses and press components. Weld joints shall be designed for the intended service using the geometries listed in this clause. Other geometries shall be qualified per Clause 7, Qualification. Complete information regarding location, type, size, and extent of all welds and welded joints shall be shown on the drawings.

4.2 Weld Joint Nomenclature. Weld joint nomenclature shall be in conformance with the latest edition of AWS A3.0*, Standard Welding Terms and Definitions*.

4.3 Weld Joint Qualification

4.3.1 Joints that conform to the details shown in the figures of Annex B, and which are welded in conformance to the requirements of Clause 7, Qualification, Method A, are designated as prequalified. They may be used without performing a welding procedure qualification as prescribed in Clause 7, Qualification, Method B or C.

4.3.2 Joint details that depart from those prescribed in the figures of Annex B, or which are not welded in conformance to the requirements of Clause 7, Qualification, Method A, shall be qualified in conformance to Clause 7, Qualification, Method B or C.

4.3.3 Dimensions of groove welds specified on design or detail drawings may deviate from the dimensions shown in the figures of Annex B only within the following limits:

4.3.3.1 The specified thickness of base metal is the maximum nominal thickness that may be used.

Copyright American Welding Society
Provided by IHS under license with AWS
No reproduction or networking permitted without license from IHS
Licensee=University of Texas Revised Sub Account/5620001114
Not for Resale, 08/29/2012 23:50:47 MDT

4.3.3.2 The root face of the joints shall be as dimensioned in the figures of Annex B. The root face may be detailed to exceed this dimension or the specified dimension by not more than 1/16 in [2 mm] except for SAW, in which case the root face as shown is maximum. The root face may not be detailed less than the specified dimension for any other process.

4.3.3.3 The root opening of the joint is the minimum. It may be detailed to exceed the dimension shown by not more than 1/16 in [2 mm] except for SAW, in which case the root opening of closed joints shall be detailed as zero (no deviation). The root opening of open joints with backing is minimum. It may be detailed to exceed the dimension shown by not more than 1/16 in [2 mm].

4.3.3.4 The groove angle is the minimum. It may be detailed to exceed the dimension shown by not more than 10°.

4.3.3.5 The radius of J-grooves and U-grooves is the minimum. It may be detailed to exceed the dimension shown by not more than 1/8 in [3 mm]. U-grooves may be prepared prior to or after fitting.

4.3.3.6 Double-groove welds may have grooves of unequal depth, but the depth of the smaller groove shall not be less than one-fourth of the thickness of the thinner part joined for complete penetration welds or as noted in Table 4.

4.4 Groove Welds

4.4.1 The effective area is the effective weld length multiplied by the weld size.

4.4.2 The effective weld length for any groove weld, square or skewed, is the width of the part joined, perpendicular to the direction of stress.

4.4.3 The effective weld size of a complete joint penetration groove weld is the thickness of the thinner piece of base metal joined. No increase is permitted for weld reinforcement or overlaying fillet.

4.4.4 The effective weld size of a partial joint penetration bevel-groove weld with less than a 60° included angle, where back chipping or gouging is not done, is determined by subtracting 1/8 in [3 mm] from the groove depth.

4.4.5 Root openings should be limited to the dimensions noted in the sketches of prequalified joint details shown in the figures of Annex B.

4.4.6 The effective throat of a partial joint penetration groove weld is the joint penetration obtained by sectioning a weld, or as noted in 4.4.4.

4.4.7 A complete joint penetration groove weld is defined as one that has been made from both sides, or from one side, having complete joint penetration and fusion of weld and base metals through the thickness of the joint.

4.4.8 Complete joint penetration groove welds made without use of a backing strip shall have the root gouged to sound metal before welding is started from the second side.

4.4.9 Groove welds without backing strips, welded from one side, and groove welds welded from both sides, but without backgouging, are considered partial joint

Table 4
Minimum Weld Size for Fillet and Partial Joint Penetration Groove Welds

Base-Metal Thickness of Thicker Part Joined		Minimum Weld Size[a]	
in	mm	in	mm
1/8 to ≤3/16	3 to ≤5	1/16[b,c]	2
>3/16 to ≤1/4	>5 to ≤6	1/8[b]	3
>1/4 to ≤1/2	>6 to ≤13	3/16	5
>1/2 to ≤3/4	>13 to ≤20	1/4	6
>3/4 to ≤1-1/2	>20 to ≤40	5/16	8
>1-1/2 to ≤2-1/4	>40 to ≤55	3/8	10
>2-1/4 to ≤6	>55 to ≤150	1/2	13
>6	>150	5/8	16

[a] Except the weld size need not exceed the thickness of the thinner part.
[b] Minimum size for dynamically loaded components is 3/16 in [5 mm].
[c] Applicable to PJP groove welds only.

Copyright American Welding Society
Provided by IHS under license with AWS
No reproduction or networking permitted without license from IHS
Licensee=University of Texas Revised Sub Account/5620001114
Not for Resale, 08/29/2012 23:50:47 MDT

penetration groove welds unless qualification testing proves complete fusion of base metal and filler metal throughout the thickness of the joint.

4.4.10 A partial joint penetration groove weld is defined as one welded from one or both sides and having joint penetration that is less than complete.

4.4.11 For a combined partial joint penetration groove weld and fillet weld, the effective weld area is the effective weld length multiplied by the effective throat. The effective throat is the shortest distance from the joint root to the weld face of the diagrammatic weld. When the groove angle, α, is less than 60°, refer to the figures of Annex B to determine when to reduce the groove weld size, E, and therefore the effective throat of the combined joint, by 1/8 in [3 mm].

4.4.12 Double-groove welds may have grooves of unequal depth, provided that the weld deposit on each side of the joint conforms to the limitations of Table 4.

4.4.13 The minimum weld size of partial joint penetration square-, bevel-, and V-groove welds shall be as shown in Table 4.

4.5 Fillet Welds

4.5.1 No allowance for penetration into the plate surfaces at the root of a fillet weld is made when computing the effective throat except as follows: Only when sectioned test pieces show that the welding procedure gives penetration 3/32 in [2.5 mm] beyond the root of the joint may the effective throat be considered to extend from the joint root to the face of the weld (see Figure 2).

4.5.2 The effective area of fillet welds is the effective weld length multiplied by the effective throat. Stress in a fillet weld shall be considered as applied to this effective area for any direction of applied load.

4.5.2.1 The effective length of a fillet weld is the overall length of the full size fillet including end returns.

4.5.2.2 The effective length of a curved fillet weld is the length of the line generated by the center point of the effective throat. For a fillet weld in a hole or slot, if the weld area computed from this length is greater than the area found in 4.6 below, then this latter area shall be used as the effective area of the fillet weld.

4.5.2.3 The effective throat is the minimum distance from the fillet weld face, minus any convexity, and the weld root.

4.5.3 The details of fillet welds made by shielded metal arc welding (SMAW), submerged arc welding (SAW), gas metal arc welding (GMAW), or flux cored arc welding (FCAW) which may be used without joint welding procedure qualification are shown in Figure 2.

4.5.4 Minimum required fillet weld sizes are shown in Table 4.

4.5.5 The maximum size fillet weld that may be used along edges of material shall be as follows:

4.5.5.1 Along edges of material less than 1/4 in [6 mm] thick, the maximum size may be equal to the thickness of the material.

4.5.5.2 Along edges of material 1/4 in [6 mm] or more in thickness, the maximum size shall be 1/16 in [2 mm] less than the thickness of the material, unless the drawings specify that the weld is to be built out to obtain full throat thickness as illustrated in Figure 2(A) or 2(B).

4.5.6 The minimum effective length of a fillet weld shall be 1-1/2 in [40 mm].

4.5.7 Fillet welds which support a tensile force that is not parallel to the axis of the weld, or are proportioned to withstand repeated stress, shall not terminate at corners of parts or members; such welds shall be returned continuously, full size around the corner for a length equal to twice the weld size, where such return can be made in the same plane. End returns shall be indicated on design and detail drawings.

4.5.8 Fillet welds in holes or slots may be used to transmit shear in lap joints or to prevent the buckling or separation of lapped parts. Fillet welds in a hole or slot may overlap. Fillet welds in holes or wide slots are not to be considered as plug or slot welds (see 4.6).

4.5.9 Seal welding shall be accomplished by a continuous weld combining the functions of sealing and strength, changing section only as the required strength or the requirements of 4.5.4 may necessitate.

4.5.10 Fillet welds may be used in skew joints that have an acute angle of not less than 60°. Permitted forms of such joints are detailed in Figure 2(C) and 2(D).

4.5.11 For intermittent fillet welds, the following requirements shall be met:

4.5.11.1 Minimum effective length of each weld shall be 1-1/2 in [40 mm].

4.5.11.2 At least 25% of the joint shall be welded.

4.5.11.3 Maximum clear spacing, end-to-end, of welds shall be 12 times the thickness of the thinner part, but not more than 6 in [150 mm].

4.5.11.4 If intermittent fillet welds are used, there shall be welds located at each end of the joint.

4.5.11.5 Intermittent fillet welds may be used to carry loads, provided the requirements of Clause 5, Design Stresses, and Annex C are satisfied. When calculating

Copyright American Welding Society
Provided by IHS under license with AWS
No reproduction or networking permitted without license from IHS
Licensee=University of Texas Revised Sub Account/5620001114
Not for Resale, 08/29/2012 23:50:47 MDT

BASE METAL LESS THAN
1/4 in [6 mm] THICK

(A)

BASE METAL 1/4 in [6 mm]
OR MORE IN THICKNESS

(B)

MAXIMUM DETAILED SIZE OF FILLET WELD ALONG EDGES

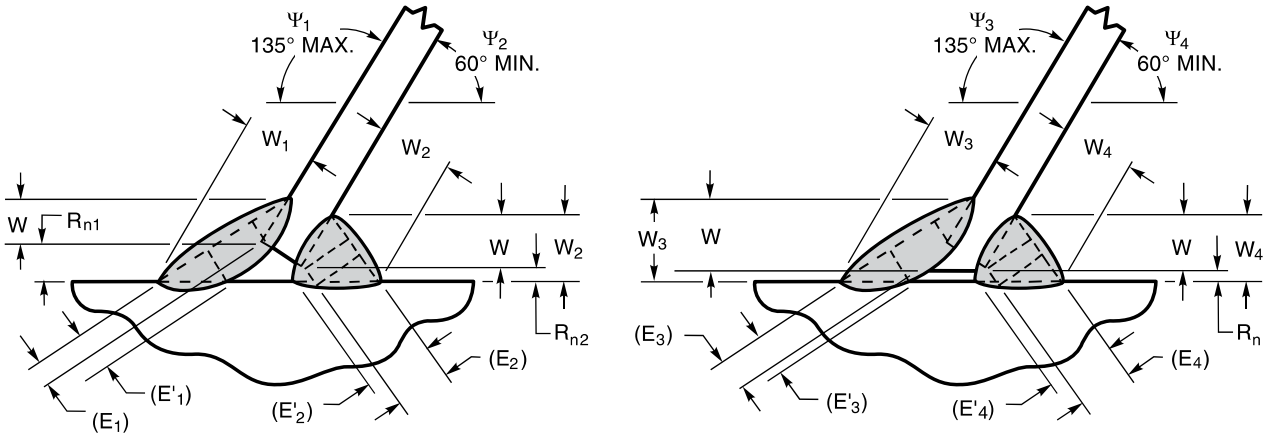

(C)

(D)

SKEWED T-JOINTS

Notes:
1. E_n & E'_n = effective throats dependent on magnitude of gap (R_n). Subscript (n) represents 1, 2, 3, or 4.
2. The parts to be joined by fillet welds shall be brought into as close contact as practicable. The gap between parts shall not exceed 3/16 in [5 mm] except in cases involving shapes or plates 3 in [75 mm] or greater in thickness if, after straightening and in assembly, the gap cannot be closed sufficiently to meet this tolerance. In such cases, a maximum gap of 5/16 [8 mm] is acceptable provided a sealing weld or suitable backing material is used to prevent melting through. If the separation is 1/16 in [2 mm] or greater, the leg of the fillet weld shall be increased by the amount of the separation or the contractor shall demonstrate that the required effective throat has been obtained.
3. The separation between faying surfaces of lap and of butt weld joints landing on a backing shall not exceed 1/16 in [2 mm]. The use of fillers is prohibited except as specified on the drawings or as approved by the Engineer.
4. Angles smaller than 60° are permitted; however, in such cases the weld is considered to be a partial penetration groove weld.

Figure 2—Details of Fillet Welds

Copyright American Welding Society
Provided by IHS under license with AWS
No reproduction or networking permitted without license from IHS
Licensee=University of Texas Revised Sub Account/5620001114
Not for Resale, 08/29/2012 23:50:47 MDT

the load carrying capabilities of intermittent loads, the stress shall be considered as shear stress in the effective area, for any direction of applied load. The effective area shall be the effective weld length, multiplied by the effective throat.

4.6 Plug and Slot Welds

4.6.1 Plug and slot welds may be used to carry loads, provided the requirements of Clause 5, Design Stresses, are satisfied.

4.6.2 The effective area shall be the nominal area of the hole or slot in the plane of the faying surface. These welds shall be computed to resist only shear stresses in the effective area.

4.6.3 The thickness of the weld in a plug or slot weld in material 5/8 in [16 mm] thick or less shall be equal to the thickness of the material. The thickness of the weld in a plug or slot weld in material over 5/8 in [16 mm] thick shall be at least one-half the thickness of the material but not less than 5/8 in [16 mm].

4.6.4 The diameter of the hole for a plug weld should be not less than the thickness of the part containing it, plus 5/16 in [8 mm], preferably rounded to the next greater 1/16 in [2 mm], nor shall it be greater than 2-1/4 times the thickness of the weld.

4.6.5 The minimum center-to-center spacing of plug welds shall be four times the diameter of the hole.

4.6.6 The length of a slot for a slot weld shall not exceed ten times the thickness of the weld. The width of the slot shall be not less than the thickness of the part containing it, plus 5/16 in [8 mm], preferably rounded to the next greater 1/16 in [2 mm], nor shall it be greater than 2-1/4 times the thickness of the weld.

4.6.7 The ends of the slot shall be semicircular or shall have the corners rounded to a radius not less than the thickness of the part containing it, except those ends that extend to the edge of the part.

4.6.8 The minimum spacing of lines of slot welds in a direction transverse to their length shall be 4 times the width of the slot. The minimum center-to-center spacing in a longitudinal direction on any line shall be 2 times the length of the slot.

5. Design Stresses

5.1 General. A press, as described in Annex F, is a machine subject to cyclic loading that induces fluctuating working stress in every element. The magnitude of the fluctuation between maximum and minimum working stress is the working stress range. This specification will establish the allowable stress and allowable stress range for steel weldments subject to static and dynamic loading. This specification will not assign nor instruct how to compute values for the factors in 5.1.2 that influence working stress; nor will the press designer or manufacturer be told how to select component loads, calculate stress in weld and base metal, or select a factor of safety.

5.1.1 Stress range is the algebraic difference between the maximum stress and the minimum stress. Tension stress is considered to have the opposite algebraic sign from compression stress.

5.1.2 The magnitude of the working stress and working stress range in an operating press are influenced by factors such as: press tonnage, type of operating mechanism, component size, shock or impact, accidental overloads, corrosion, wear, misalignment, stress concentration, and weld joint design.

5.1.3 Allowable stress and allowable stress range is the maximum working stress and working stress range permitted in an element. A lower stress and stress range may be used at the discretion of the designer.

5.1.4 Working stress and working stress range shall not exceed the allowable stress or allowable stress range in an element.

5.1.5 Calculated stress and calculated stress range is the designer's estimate of working stress and working stress range.

5.1.6 The manufacturer is responsible for selecting an appropriate factor of safety to assure calculated stress and calculated stress range do not exceed the working stress and working stress range.

5.1.7 In lieu of making stress calculations, the design requirements of this clause and Annex C for a press weld joint, weldment, or assembly of weldments may be satisfied by prototype testing. The prototype testing shall comply with the performance criteria of 7.2.3 and demonstrate that all design requirements are met. The tests and test results shall be documented and recorded.

5.2 Fatigue. Fatigue is the process of progressive localized damage that may result in cracks or complete fracture after a sufficient number of significant cycles. A significant cycle is one in which:

(1) The working stress in plain base metal exceeds the working endurance limit stress, or

(2) The working stress range of base metal or weld metal in a weld joint exceeds the allowable stress range for the applicable stress category (see Annex C).

Fatigue life is the number of significant stress fluctuations or cycles sustained before failure.

Copyright American Welding Society
Provided by IHS under license with AWS
No reproduction or networking permitted without license from IHS
Licensee=University of Texas Revised Sub Account/5620001114
Not for Resale, 08/29/2012 23:50:47 MDT

5.2.1 This specification shows and quantifies in Annex C the allowable stress and allowable stress range values, in the weld metal and base metal, under static or dynamic load conditions for various welded steel joint arrangements.

5.2.2 Fatigue life of a steel weld joint is dependent on the weld joint detail and stress category. The weld joint stress category is a function of joint geometry, type of weld, direction of load application and weld quality. See Annex C, Table C.4 and Figure C.3.

5.2.3 Fatigue life of a welded steel joint is dependent on the working stress range. As the magnitude of the working stress range increases, the fatigue life decreases. See Annex C, Table C.5.

5.2.4 Fatigue life of a welded steel joint is independent of base-metal tensile strength. Therefore, fatigue life of a welded steel joint does not increase with increased material tensile strength (see C5 in Annex C).

6. Workmanship

6.1 General. This clause contains guidelines for workmanship that shall be followed during the fabrication and inspection of presses and press components.

6.2 Preparation of Materials

6.2.1 Surfaces on which the weld metal will be deposited shall be uniform and free from notches, tears, cracks or other visual defects that would adversely affect the quality or strength of the weld or member. For repair of base material, see 9.5. Surfaces to be welded and surfaces within 1/2 in [13 mm] of either side of the weld joint shall be free from moisture, scale, slag, rust, grease, or other foreign material that will reduce the quality of the weld joint.

6.2.2 Preparation of edges by cutting processes shall preferably be done by machine with workmanship in accordance with 6.2.1. All inside corners of cut materials shall be formed to provide gradual transition with a fillet radius not less than 3/4 in [20 mm]. The fillet and its adjacent cuts shall meet without offset or cutting past the point of tangency. Inside corners may be formed by thermal cutting followed by grinding, if necessary, to meet the surface appearance requirements of 6.2.1.

6.2.3 Weld joints may be prepared by machining, grinding, chipping, thermal cutting, oxygen gouging, or carbon arc gouging and in such a manner that the remaining base metal forms the required configuration for the weld joint. Any residual dross, slag or carbon deposits shall be removed and be in compliance with 6.2.1. Oxygen gouging should not be used on quenched and tempered steels without the approval of the Engineer.

6.3 Assembly

6.3.1 The parts to be joined by fillet welds shall be brought into close contact. The gap between parts shall not exceed:

+1/8 in [3 mm] for materials <3 in [75 mm] thick

+3/16 in [5 mm] for materials ≥3 in [75 mm] thick

Any gap exceeding 1/16 in [2 mm] separation shall have the size of the fillet weld increased by the amount of separation. The separation between faying surfaces of lap joints or between the backing strip and plate of a groove weld shall not exceed 1/16 in [2 mm]. The use of fillers as a permanent part of the weld is prohibited, except as specified on the drawing. Slugging of the weld joint is prohibited in all cases. When the gap between pieces exceeds 1/8 in [3 mm], corrective action shall be taken (such as building up the edges prior to making the final weld).

6.3.2 Dimensions of the cross section of groove welded joints shall not vary from those shown on the detail drawing by more than the workmanship tolerances shown in Table 5. Root openings wider than those permitted by Table 5, but no greater than the thickness of the thinner parts, may be built up by welding to acceptable dimensions, prior to the joining of the parts by welding.

6.4 Preheat. The minimum preheat and interpass temperature shall conform to Table 6 for the welding process used and material class being welded. Other preheat and interpass temperatures approved by the Engineer may be used; however; temperatures lower than those of Table 6 require procedure qualification in conformance to either Method B (see 7.2.2) or Method C (see 7.2.3). The parts to be welded shall be preheated above the minimum temperature for a distance equal to the thickness of the part being welded, but not less than 3 in [75 mm], in all directions from the point of welding. In joints involving dissimilar base metals, preheat shall be specified for the higher material class being welded.

Welding shall not be done when the ambient temperature in the area of the weld joint is below 0°F [–18°C], but a heated structure or shelter around the weldment could maintain the temperatures adjacent to the weldment at 0°F [–18°C] or higher. Welding shall not be done when the base metal temperature is below the preheat, or when surfaces are wet, exposed to rain, snow, or high wind, or when welders are exposed to inclement weather conditions.

Copyright American Welding Society
Provided by IHS under license with AWS
No reproduction or networking permitted without license from IHS

Licensee=University of Texas Revised Sub Account/5620001114
Not for Resale, 08/29/2012 23:50:47 MDT

Table 5
Cross-Sectional Tolerances for Groove Welds

	Root Not Backgouged	Root Backgouged[a]
Root face of joints	+1/8 in [3 mm] –1/16 in [2 mm]	Not Limited
Root opening of joints without steel backing	+1/8 in [3 mm] –1/16 in [2 mm]	+1/8 in [3 mm]
Root opening of joints with steel backing	+1/4 in [6 mm] –1/16 in [2 mm]	Not Applicable
Groove angle of joint	+10° –5°	+10° –5°

[a] Backgouging: The forming of a bevel or groove on the other side of a partially welded joint to assure complete penetration upon subsequent welding from that side.

Table 6
Minimum Preheat and Interpass Temperatures[a, b]

Thickness of Thickest Part at Point of Welding		SMAW with Other than Low-Hydrogen Electrodes		SMAW with Low-Hydrogen Electrodes; SAW, GMAW, or FCAW			SMAW with Low-Hydrogen Electrodes; SAW with Carbon or Alloy Steel Wire, Neutral and Active Flux[c] GMAW or FCAW	SAW with Carbon Steel Wire and Alloy Flux
		Material Class I	Material Class II	Material Class I	Material Class II & Class III	Material Class IV	Material Class V[e]	Material Class V[e]
in	mm	°F [°C]	°F [°C]	°F [°C]	°F [°C]	°F [°C]	°F [°C]	°F [°C]
≤3/4	≤20	None[d]	None[d]	None[d]	None[d]	50 [10]	50 [10]	50 [10]
>3/4 to 1-1/2	>20 to 40	None[d]	150 [65]	None[d]	50 [10]	150 [65]	125 [50]	200 [95]
>1-1/2 to 2-1/2	>40 to 65	100 [40]	225 [105]	None[d]	150 [65]	225 [105]	175 [80]	300 [150]
>2-1/2	>65	200 [95]	300 [150]	150 [65]	225 [105]	300 [150]	225 [105]	400 [205]

[a] When the base metal is below the temperature listed for the welding process being used and the thickness of material being welded, it shall be preheated (except as otherwise provided) in such manner that the surfaces of the parts on which weld metal is being deposited are at or above the specified minimum temperature for a distance equal to the thickness of the part being welded, but not less than 3 in [75 mm], both laterally and in advance of the welding. Temperature above the minimum shown may be required for highly restrained welds.

[b] In joints involving combinations of base metals, preheat shall be as specified for the higher strength steel being welded.

[c] Active flux: flux from which the amount of elements deposited in the weld metal is dependent on the welding conditions, primarily on the arc voltage. Neutral flux: flux that will not cause a significant change in the weld metal composition when there is a large change in the arc voltage.

[d] When the base metal is below 32°F [0°C], the base metal shall be preheated to a minimum of 70°F [20°C] and maintained during welding.

[e] For quenched and tempered steel, the maximum preheat and interpass temperature should not exceed 400°F [205°C] for thickness up to 1-1/2 in [40 mm] inclusive, nor 450°F [230°C] for greater thickness. When welding quenched and tempered steel, heat input should not exceed the steel producer's recommendation.

Copyright American Welding Society
Provided by IHS under license with AWS
No reproduction or networking permitted without license from IHS
Licensee=University of Texas Revised Sub Account/5620001114
Not for Resale, 08/29/2012 23:50:47 MDT

6.5 Tack Welds

6.5.1 Tack welds shall be subject to the same quality requirements as the final welds.

6.5.2 Tack welds which are incorporated into the final weld shall be made with electrodes meeting the requirements of the final welds and shall be cleaned thoroughly prior to final welding. Multiple-pass tack welds shall have cascaded ends.

6.5.3 Tack welds which are not to be incorporated into final welds shall be removed prior to final welding.

6.6 Temporary Welds. Temporary welds shall be subject to the same welding procedure as final welds. When they are removed, the surface shall be made flush with the original surface. Where depressions exist, they shall be filled using the same welding procedure.

6.7 Control of Distortion and Shrinkage Stresses

6.7.1 If shrinkage stresses or distortion are likely to affect the structure, the welder shall be provided with instructions that specify the sequence of welding.

6.7.2 Peening may be used on intermediate and final weld layers for control of shrinkage stresses in thick welds to prevent cracking (see 10.3). No peening shall be done on the root pass.

6.7.3 In making welds under conditions of severe external shrinkage restraint, the welding shall be carried continuously to completion or to a point that will ensure freedom from cracking before the joint is allowed to cool below the minimum specified preheat temperature. Where preheat and interpass temperatures are not specified, welding shall continue to a point where freedom from cracking is assured.

6.8 Dimensional Tolerance. The dimensions of welded structural members shall be within the tolerances specified by the Manufacturer.

6.9 Cleaning. Slag, spatter, and arc strikes shall be cleaned from all weld metal and adjacent base metal to facilitate visual inspection.

6.10 Covering of Welds. No weld shall be covered, or made inaccessible, until inspection has been completed.

6.11 Weld Quality Requirements

6.11.1 All weld joints shall meet the quality and inspection requirements of Table 1 and Clause 8, Inspection.

6.11.2 Roughness exceeding 1000 microinches [25 microns] RMS and notches or gouges not more than 3/16 in [5 mm] on otherwise satisfactory surfaces shall be removed by machining or grinding. Larger notches and gouges may, with the approval of the Engineer, be repaired by welding (see Clause 9, Modification or Repair).

7. Qualification

7.1 Scope. It is the manufacturer's responsibility to assure all qualification requirements are met. All welding procedures, welders, welding operators, and tack welders shall be qualified under one of the following options:

(1) The methods included under Parts B, C, D, and E of this clause;

(2) AWS B2.1, *Specification for Procedure and Performance Qualification;*

(3) AWS D1.1, *Structural Welding Code—Steel*; or

(4) ASME *Boiler and Pressure Vessel Code*, Section IX, *Welding and Brazing Qualifications.*

The Fabricator may choose the qualifying option and shall maintain the qualification test records. The customer should accept evidence of previous AWS or ASME qualification of the welders, welding operators, and tack welders to be employed by the Fabricator.

A Welding Procedure Specification (WPS) shall be prepared, and qualified as required by this specification, to assure that a suitable weld is produced. The following factors shall be specified in the WPS:

(1) Base metal,

(2) Welding process,

(3) Filler metal,

(4) Joint preparation,

(5) Welding variables (including amperage, polarity, voltage, travel speed, number of passes, type of gas or flux, gas flow rate, preheat and interpass temperatures, and position of welding).

Each of the above factors, as established by procedure qualification, shall remain a fixed part of the welding procedure. All procedures used shall be prepared by the Fabricator as written procedure specifications (see Annex E for suggested forms).

Part A
Procedure Qualification

7.2 Qualification of Welding Procedures. To qualify a welding procedure, the Fabricator shall choose one of the following qualifying methods and maintain records of all

Copyright American Welding Society
Provided by IHS under license with AWS
No reproduction or networking permitted without license from IHS
Licensee=University of Texas Revised Sub Account/5620001114
Not for Resale, 08/29/2012 23:50:47 MDT

tests demonstrating that weld quality requirements are met:

(1) Method A, Prequalification (see 7.2.1);

(2) Method B, Procedure Qualification (see 7.2.2); or

(3) Method C, Prototype Testing (see 7.2.3).

7.2.1 Method A—Prequalified Procedures. Groove welds conforming to 4.3, 4.4, and Figures B.1 and B.2 in Annex B, fillet welds conforming to 4.5, and plug welds conforming to 4.6, are designated as prequalified and may be used without performing welding procedure qualification tests provided the applicable requirements of 7.2.1.1 through 7.2.1.3 are met. Standard Welding Procedure Specifications published by the AWS Committee on Welding Qualification in accordance with the latest edition of AWS B2.1, *Specification for Welding Procedure and Performance Qualification*, shall also be accepted as prequalified procedures.

7.2.1.1 One or a combination of the following processes is used:

(1) Shielded metal arc welding (SMAW),

(2) Submerged arc welding (SAW),

(3) Gas metal arc welding (GMAW),

(4) Flux cored arc welding (FCAW).

7.2.1.2 Base metal, filler metal, and preheat temperatures meet the following requirements:

(1) Steels are selected from one of the five prequalified material classes listed in 2.2 or conform to the composition and strength limits given in Table 3;

(2) The preheat and interpass temperatures are no lower than those given in Table 6;

(3) The steels meet the mechanical and chemical requirements of the engineering specification;

(4) Filler metals listed in Table 7a or Table 7b are used for complete joint penetration groove welds when the engineering specification requires that the filler metal equal the tensile strength of the base metal; for weld joints not requiring filler metals with a tensile strength equal to the base metal, and for joints other than complete joint penetration groove welds, a lower strength filler metal may be specified.

7.2.1.3 Welding procedures for the SMAW welding process listed in 7.2.1.1 shall meet the following requirements:

(1) The classification and size of electrode, voltage, polarity, and amperage shall be suited to the thickness of the material, type of groove, welding positions, and other circumstances attending the work.

(2) The maximum size of electrodes shall be as follows:

(a) 5/16 in [8 mm] for all welds made in the flat position, except root passes;

(b) 1/4 in [6 mm] for horizontal fillet welds;

(c) 1/4 in [6 mm] for root passes of fillet welds made in the flat position and of groove welds made in the flat position with backing and with a root opening of 1/4 in [6 mm] or more;

(d) 5/32 in [4 mm] for welds made with EXX14 and low-hydrogen electrodes in the vertical and overhead positions; and

(e) 3/16 in [5 mm] for root passes of groove welds and for all other welds not included in the above.

(3) The minimum size of a root pass shall be such as to prevent cracking.

(4) The maximum thickness of layers subsequent to the root pass of fillet welds and of all layers of groove welds shall be as follows:

(a) 1/4 in [6 mm] for root passes of groove welds;

(b) 1/8 in [3 mm] for subsequent layers of welds made in the flat position; or

(c) 3/16 in [5 mm] for subsequent layers of welds made in the vertical, overhead, and horizontal positions.

(5) The maximum size fillet weld that may be made in one pass shall be as follows:

(a) 3/8 in [10 mm] in the flat position,

(b) 5/16 in [8 mm] in horizontal or overhead positions, and

(c) 1/2 in [13 mm] in the vertical position.

(6) When welding in a vertical position, the progressions for all passes shall be upward, except that undercut may be repaired vertically downward when preheat is in conformance to Table 6 but not lower than 70°F [20°C]. However, in tubular structures, the progression of vertical welding may be upward or downward, but only in the direction or directions for which the welder is qualified.

(7) Complete joint penetration groove welds made without the use of steel backing shall have the root gouged to sound metal before welding is started from the second side.

Copyright American Welding Society
Provided by IHS under license with AWS
No reproduction or networking permitted without license from IHS

Licensee=University of Texas Revised Sub Account/5620001114
Not for Resale, 08/29/2012 23:50:47 MDT

Table 7a
Matching Filler Metal Requirements[a, b, c]
(U.S. Customary Table)

Base Metal[d]	Welding Process			
	SMAW	SAW	GMAW	FCAW
Class I Class II	E60XX, E70XX E70XX-X (AWS A5.1 or A5.5)	F6XX-EXXX F7XX-EXXX F7XX-EXX-XX (AWS A5.17 or A5.23)	ER70S-X (AWS A5.18) E70C-XX (AWS A5.18 or A5.28)	E6XT-X, E7XT-X, or E7XTX-X (except -2, -3, -10, -13, -14, or -GS)[e] (AWS A5.20 or A5.29)
Class III	E70X[f] E70XX-X[f] (AWS A5.1 or A5.5[a])	F7XX-EXXX F7XX-EXX-XX (AWS A5.17 or A5.23)	ER70S-X (AWS A5.18) E70C-XX (AWS A5.18 or A5.28)	E7XT-X, E7XT-X, or E7XTX-X (except -2, -3, -10, -13, -14, or -GS)[e] (AWS A5.20 or A5.29)
Class IV UTS >70 ksi [>485 MPa] UTS ≤70 ksi [≤485 MPa]	E80XX-X[f] (AWS A5.5) E70XX-X[f] E70XX[f] (AWS A5.1 or A5.5)	F8XX-EXX-XX (AWS A5.23) F7XX-EXX F7XX-EXX-X (AWS A5.17 or A5.23)	ER80S-X E80C-XX (AWS A5.28) ER70S-X E70C-XX (AWS A5.18)	E8XTX-X (AWS A5.29) E7XT-X or E7XTX-X (except -2, -3, -10, -13, -14 or -GS)[e] (AWS A5.20)
Class V Thickness <2.5 in [<65 mm] ≤2.5 in [≤65 mm]	E110XX-X[f] E11018M (AWS A5.5) E100XX-X[f] E10018M (AWS A5.5)	F11XX-EXX-XX (AWS A5.23) F10XX-EXX-XX (AWS A5.23)	ER110S-X (AWS A5.28) ER100S-X (AWS A5.28)	E11XTX-X (AWS A5.29) E10XTX-X (AWS A5.29)

[a] The use of the same type of filler metal having the next higher strength classification as listed in AWS filler metal specifications is permitted. A filler metal of a lower strength may be used where the Engineer has stipulated less than 100% joint efficiency.
[b] Filler metals of alloy groups B3, B3L, B4L, B5, B6, B6L, B7, B7L, B8, B8L, or B9, in AWS A5.5, A5.23, A5.28, or A5.29, are not prequalified for use in the as-welded condition.
[c] When welds are to be thermally stress-relieved, the deposited weld metal shall not exceed 0.05% vanadium.
[d] In joints involving base metals of different yield points or strengths, filler metals applicable to the lower strength metal may be used.
[e] If E7XT-2 filler metals are qualified by prototype testing (see 7.2.3), this qualifies the use of these filler metals for production.
[f] Low-hydrogen classifications only (i.e., EXX15, EXX16, EXX18, EXX28, EXX48).

7.2.1.4 Welding procedures for the SAW welding process with a single electrode shall meet the following requirements:

(1) All submerged arc welds, except fillet welds, shall be made in the flat position. Fillet welds may be made in either the flat or horizontal position except that single-pass fillet welds made in the horizontal position shall not exceed 5/16 in [8 mm].

(2) The thickness of weld layers, except root and surface layers, shall not exceed 1/4 in [6 mm]. When the root opening is 1/2 in [13 mm] or greater, a multiple-pass split-layer technique shall be used when the width of the layer exceeds 5/8 in [16 mm]. The thickness of weld layers may exceed these limitations, provided the manufacturer can demonstrate, by nondestructive examination or macroetch examination of sample welds, that sound welds are produced.

(3) The welding current, arc voltage, and speed of travel shall be such that each pass will have complete fusion with the adjacent base metal and weld metal and there will be no overlap or unacceptable undercutting.

Copyright American Welding Society
Provided by IHS under license with AWS
No reproduction or networking permitted without license from IHS
Licensee=University of Texas Revised Sub Account/5620001114
Not for Resale, 08/29/2012 23:50:47 MDT

Table 7b
Matching Filler Metal Requirements[a, b, c]
(SI Units Table)

Base Metal[d]	Welding Process			
	SMAW	SAW	GMAW	FCAW
Class I Class II	E43XX, E49XX E49XX-X (AWS A5.1M or A5.5M)	F43XX-EXXX F49XX-EXXX F49XX-EXX-XX (AWS A5.17M or A5.23M)	ER49S-X (AWS A5.18M) E49C-XX (AWS A5.18M or A5.28M)	E43XT-X, E49XT-X, or E49XTX-X (except -2, -3, -10, -13, -14, or -GS)[e] (AWS A5.20M or A5.29M)
Class III	E49Xf E49XX-X[f] (AWS A5.1M or A5.5Ma)	F49XX-EXXX F49XX-EXX-XX (AWS A5.17M or A5.23M)	ER49S-X (AWS A5.18M) E49C-XX (AWS A5.18M or A5.28M)	E49XT-X, E49XT-X, or E49XTX-X (except -2, -3, -10, -13, -14, or -GS)[e] (AWS A5.20M or A5.29M)
Class IV UTS >70 ksi [>485 MPa] UTS ≤70 ksi [≤485 MPa]	E55XX-X[f] (AWS A5.5M) E49XX-X[f] E49XX[f] (AWS A5.1M or A5.5M)	F55XX-EXX-XX (AWS A5.23M) F49XX-EXX F49XX-EXX-X (AWS A5.17M or A5.23M)	ER55S-X E55C-XX (AWS A5.28M) ER49S-X E49C-XX (AWS A5.18M)	E55XTX-X (AWS A5.29M) E49XT-X or E49XTX-X (except -2, -3, -10, -13, -14 or -GS)[e] (AWS A5.20M)
Class V Thickness <2.5 in [<65 mm] ≤2.5 in [≤65 mm]	E76XX-X[f] E7618M (AWS A5.5M) E69XX-X[f] E6918M (AWS A5.5M)	F76XX-EXX-XX (AWS A5.23M) F69XX-EXX-XX (AWS A5.23M)	ER76S-X (AWS A5.28M) ER69S-X (AWS A5.28M)	E76XTX-X (AWS A5.29M) E69XTX-X (AWS A5.29M)

[a] The use of the same type of filler metal having the next higher strength classification as listed in AWS filler metal specifications is permitted. A filler metal of a lower strength may be used where the Engineer has stipulated less than 100% joint efficiency.
[b] Filler metals of alloy groups B3, B3L, B4L, B5, B6, B6L, B7, B7L, B8, B8L, or B9, in AWS A5.5M, A5.23M, A5.28M, or A5.29M, are not prequalified for use in the as-welded condition.
[c] When welds are to be thermally stress-relieved, the deposited weld metal shall not exceed 0.05% vanadium.
[d] In joints involving base metals of different yield points or strengths, filler metals applicable to the lower strength metal may be used.
[e] If E49XT-2 filler metals are qualified by prototype testing (see 7.2.3), this qualifies the use of these filler metals for production.
[f] Low-hydrogen classifications only (i.e., EXX15, EXX16, EXX18, EXX28, EXX48).

7.2.1.5 Welding procedures for the GMAW and FCAW welding processes shall meet the following requirements:

(1) Essential requirements for prequalified procedures are as follows:

(a) GMAW spray, globular, or pulsed arc transfer modes with an average arc energy greater than the transition current for short circuit transfer are prequalified. Low-energy modes of metal transfer, including short circuit transfer and pulsed arc transfer modes with an average arc energy less than the transition current for short circuit transfer, are not prequalified.

(b) The maximum electrode diameter shall be 5/32 in [4 mm] for the flat and horizontal position, 3/32 in [2.4 mm] for the vertical position, and 5/64 in [2 mm] for the overhead position.

(c) The maximum size of a fillet weld made in one pass shall be 1/2 in [13 mm] for the flat and vertical positions; 3/8 in [10 mm] for the horizontal position and 5/16 in [8 mm] for the overhead position.

Copyright American Welding Society
Provided by IHS under license with AWS
No reproduction or networking permitted without license from IHS
Licensee=University of Texas Revised Sub Account/5620001114
Not for Resale, 08/29/2012 23:50:47 MDT

(2) The thickness of weld layers, except root and surface layers, shall not exceed 1/4 in [6 mm]. When the root opening of a groove weld is 1/2 in [13 mm] or greater, a multiple-pass, split-layer technique shall be used. The split-layer technique shall also be used in making all multiple-pass welds when the width of the layer exceeds 5/8 in [16 mm].

(3) The welding current, arc voltage, gas flow, mode of metal transfer, and speed of travel shall be such that each pass has complete fusion with adjacent base metal and weld metal, and there is no excessive overlap, porosity, or undercutting.

(4) Complete joint penetration groove welds made without the use of backing shall have the root of the initial weld gouged, chipped, or otherwise removed to expose sound metal before welding is started from the second side.

(5) Gas metal arc or flux cored arc welding with external gas shielding shall not be done in turbulent air unless the weld is protected by a shelter. This shelter shall be of material and shape appropriate to reduce wind velocity to a maximum of 5 miles/h [8 km/h] in the vicinity of the weld.

(6) Roots of groove or fillet welds may be backed to prevent melting through by the use of copper, flux, glass tape, iron powder, or similar materials, or be sealed by means of root passes deposited by low-hydrogen electrodes or processes using low-hydrogen practices.

7.2.2 Method B—Procedure Qualification. If the welding procedure specification (WPS) does not meet all the prequalification requirements of 7.2.1, the procedure shall be qualified according to 7.3 through 7.11 or Method C, Prototype Testing (7.2.3), except for the electroslag and electrogas processes. Any procedure involving electroslag or electrogas welding shall be qualified in conformance to 7.3 through 7.11 of this specification. See Annex E for suggested forms.

The conditions used in production may vary from the qualified procedure. Variation which exceeds the allowable limits described in 7.2.2.1 through 7.2.2.5 for the following processes shall require requalification.

7.2.2.1 Shielded Metal Arc Welding (SMAW). A change in any of the following variables requires requalification of the WPS:

(1) A change to increase filler metal strength level; e.g., a change from E70XX-X to E80XX-X [48XX-X to 55XX-X], but not vice versa.

(2) A change from a low-hydrogen type electrode to a nonlow-hydrogen type of electrode, but not vice versa.

(3) An increase in the electrode diameter by more than 1/32 in [1 mm] over that used in the procedure qualification.

(4) A change of electrode amperage and voltage values that is not within the ranges recommended by the electrode manufacturer. When welding quenched and tempered steel, any change within the limitation of variables shall not increase the heat input beyond the steel producer's recommendations.

(5) For a specified groove, a change of more than ±25% in the specified number of passes. (If the area of the groove is increased, it is also permissible to increase the number of passes in proportion to the increased area.)

(6) A change in position in which welding is done as defined in 7.5.

(7) A change in the type of groove; e.g., a change from a V- to a U-groove.

(8) A change from the dimensions of the joint qualified involving:

(a) A decrease in the included angle of the groove;

(b) A decrease in the root opening of the groove;

(c) An increase in the root face (excluding length) of the groove; or

(d) The omission, but not the inclusion, of backing material.

(9) A decrease of more than 25°F [15°C] in the minimum specified preheat temperature.

(10) In the case of vertical welding, a change from the progression specified for any pass from upward to downward, or vice versa.

(11) A change in type of current (ac or dc) or polarity.

(12) The omission, but not inclusion, of backgouging.

(13) The addition or deletion of postweld heat treatment.

7.2.2.2 Submerged Arc Welding (SAW). A change in any of the following variables requires requalification of the WPS:

(1) A change in electrode and flux combination not covered by AWS A5.17/A5.17M, *Specification for Carbon Steel Electrodes and Fluxes for Submerged Arc Welding*, and AWS A5.23/A5.23M, *Specification for Low Alloy Steel Electrodes and Fluxes for Submerged Arc Welding*.

(2) A change to increase the specified minimum strength level of the filler metal.

Copyright American Welding Society
Provided by IHS under license with AWS
No reproduction or networking permitted without license from IHS

Licensee=University of Texas Revised Sub Account/5620001114
Not for Resale, 08/29/2012 23:50:47 MDT

(3) A change in electrode diameter when using an active flux.[4]

(4) A change in the number of electrodes used; e.g., a single electrode to multiple electrodes, or vice versa.

(5) A change in the type of current (ac or dc) or polarity.

(6) A change of more than 10% above or below the specified mean amperage for each size electrode used.

(7) A change of more than 7% above or below the specified mean arc voltage for each size electrode used.

(8) A change of more than 15% above or below the specified mean travel speed.

(9) A change of more than ±10% or 1/8 in [3 mm], whichever is greater, in the longitudinal spacing of the arcs.

(10) A change of more than ±10% or 1/16 in [2 mm], whichever is greater, in the lateral spacing of the arcs.

(11) A change of more than ±10° in the angular position of any parallel electrode.

(12) A change in the angle of electrodes in machine or automatic welding of more than:

(a) ±3° in the direction of travel, or

(b) ±5° normal to the direction of travel.

(13) For a specified groove, a change of more than ±25% in the specified number of passes. If the area of the groove is changed, it is also permissible to change the number of passes in proportion to the area.

(14) A change in position in which welding is done as defined in 7.5.

(15) A change in the type of groove; e.g., a change from a V- to a U-groove.

(16) A change from the dimensions of the joint qualified involving:

(a) A decrease in the included angle of the groove;

(b) A decrease in the root opening of a groove;

(c) An increase in the root face (excluding length) of a groove; or

(d) The omission, but not the inclusion, of backing material.

[4] An active flux is a flux from which the amount of elements deposited in the weld metal is dependent on the welding conditions, primarily on the arc voltage.

(17) A decrease of more than 25°F [15°C] in the minimum specified preheat temperature.

(18) An increase in the diameter of the electrode used, greater than that called for in the procedure specification.

(19) The omission, but not inclusion, of backgouging.

(20) The addition or deletion of postweld heat treatment.

7.2.2.3 Gas Metal Arc Welding (GMAW). A change in any of the following variables requires requalification of the WPS:

(1) A change in electrode type and method of shielding not covered by AWS A5.18/A5.18M, *Specification for Carbon Steel Filler Metals for Gas Shielded Arc Welding*, and AWS A5.28/A5.28M, *Specification for Low-Alloy Steel Filler Metals for Gas Shielded Arc Welding*.

(2) A change to increase the specified minimum strength level of the filler metal.

(3) A change in electrode diameter.

(4) A change in the number of electrodes used; e.g., a single electrode to multiple electrodes, or vice versa.

(5) A change from a single gas to any other single gas or to a mixture of gases or a change in specified percentage composition of gas mixture not covered by AWS A5.18/A5.18M, *Specification for Carbon Steel Filler Metals for Gas Shielded Arc Welding*, and AWS A5.28/A5.28M, *Specification for Low-Alloy Steel Filler Metals for Gas Shielded Arc Welding*.

(6) A change of more than 10% above or below the specified mean amperage for each size electrode used.

(7) A change of more than 7% above or below the specified mean arc voltage for each size electrode used.

(8) A change of more than 10% above or below the specified mean travel speed.

(9) An increase of 25% or more or a decrease of 10% or more in the rate of flow of shielding gas mixture.

(10) For a specified groove, a change of more than 25% in the specified number of passes. (If the area of the groove is increased, it is also permissible to increase the number of passes in proportion to the increased area.)

(11) A change in the position in which welding is done as defined in 7.5.

(12) A change in the type of groove; e.g., a change from a V- to U-groove.

(13) A change from the dimensions of the joint qualified involving:

Copyright American Welding Society
Provided by IHS under license with AWS
No reproduction or networking permitted without license from IHS
Licensee=University of Texas Revised Sub Account/5620001114
Not for Resale, 08/29/2012 23:50:47 MDT

(a) A decrease in the included angle of the groove;

(b) A decrease in the root opening of a groove;

(c) An increase in the root face of a groove; or

(d) The omission, but not the inclusion, of backing material.

(14) A decrease of more than 25°F [15°C] in the minimum specified preheat temperature.

(15) In vertical welding, a change from the progression specified for any pass from upward to downward, or vice versa.

(16) A change in type of welding current (ac or dc), polarity, or mode of metal transfer across the arc.

(17) The omission, but not inclusion, of backgouging.

(18) The addition or deletion of postweld heat treatment.

7.2.2.4 Flux Cored Arc Welding (FCAW). A change in any of the following variables requires requalification of the WPS:

(1) A change in electrode type and method of shielding not covered by AWS A5.20/A5.20M, *Specification for Carbon Steel Electrodes for Flux Cored Arc Welding*, and AWS A5.29/A5.29M, *Specification for Low-Alloy Steel Electrodes for Flux Cored Arc Welding*.

(2) A change to increase the specified minimum strength level of the filler metal.

(3) An increase in the diameter of electrode used over that called for in the procedure specification.

(4) A change in the number of electrodes used; e.g., a single electrode to multiple electrodes, or vice versa.

(5) A change from a single gas to any other single gas or to a mixture of gases, or a change in specified percentage composition of gas mixture not covered by AWS A5.20/A5.20M, *Specification for Carbon Steel Electrodes for Flux Cored Arc Welding*, and AWS A5.28/A5.28M, *Specification for Low-Alloy Steel Filler Metals for Gas Shielded Arc Welding*.

(6) A change of more than 10% above or below the specified mean amperage for each size electrode used.

(7) A change of more than 7% above or below the specified mean arc voltage for each size electrode used.

(8) A change of more than 10% above or below the specified mean travel speed.

(9) An increase of 25% or more or a decrease of 10% or more in the rate of flow of shielding gas or mixture.

(10) For a special groove, a change of more than ±25% in the specified number of passes. (If the area of the groove is increased, it is also permissible to increase the number of passes in proportion to the increased area.)

(11) A change in the position in which welding is done as defined in 7.5.

(12) A change in the type of groove; e.g., a change from a V- to U-groove.

(13) A change from the dimensions of the joint qualified involving:

(a) A decrease in the included angle of the groove;

(b) A decrease in the root opening of a groove;

(c) An increase in the root face of a groove; or

(d) The omission, but not the inclusion, of backing material.

(14) A decrease of more than 25°F [15°C] in the minimum specified preheat temperature.

(15) In vertical welding, a change from the progression specified for any pass from upward to downward, or vice versa.

(16) A change in type of welding current (ac or dc), polarity, or mode of metal transfer across arc.

(17) The omission, but not inclusion, of backgouging.

(18) The addition or deletion of postweld heat treatment.

7.2.2.5 Electroslag and Electrogas Welding. The following changes in a qualified electroslag or electrogas procedure shall require requalification of the procedure by radiographic or ultrasonic testing in conformance to the requirements of 8.3 or 8.4.

(1) A change in filler metal diameter exceeding 1/32 in [0.8 mm].

(2) A change in filler metal oscillation traverse speed exceeding 10 in/min [250 mm/min].

(3) A change in filler metal oscillation traverse dwell time exceeding 2 s, except as necessary to compensate for variation in joint opening.

(4) A change in filler metal oscillation traverse length affecting proximity of filler metal to the molding shoes by more than 1/8 in [3 mm].

(5) A change in flux burden exceeding 30%.

(6) A change in type of shielding gas or a change in shielding gas flow rate exceeding 25%.

Copyright American Welding Society
Provided by IHS under license with AWS
No reproduction or networking permitted without license from IHS
Licensee=University of Texas Revised Sub Account/5620001114
Not for Resale, 08/29/2012 23:50:47 MDT

(7) A change in the design of the molding shoes, either fixed or movable, as follows:

(a) Nonfusing solid to water-cooled, or vice versa; or

(b) Metallic to nonmetallic, or vice versa; or

(c) Nonfusing to fusing, or vice versa; or

(d) A reduction in any cross-sectional dimension or area of solid nonfusing shoe exceeding 25%.

(8) A change of welding position from vertical by more than 10°.

(9) A change in the type of current (ac or dc) or polarity.

(10) A change in welding power volt-ampere characteristics from constant voltage to constant current, or vice versa.

(11) A change in voltage exceeding 10%.

(12) A change in square-groove root opening exceeding 1/4 in [6 mm].

(13) A change in the speed of vertical travel, if not an automatic function of arc length or deposition rate, exceeding 20%, except as necessary to compensate for variations in joint opening

7.2.3 Method C—Prototype Testing

7.2.3.1 Welding procedures may be qualified under Method C by utilizing prototype structures or components that comply with the minimum performance criteria as follows:

(1) Simulated service tests of a welded assembly or a mockup of the welded joint. The simulated service test shall include impact loading, loading in bending, static loading, or fatigue testing to duplicate the type of loading the joint will be subjected to in service.

(2) A field test of the welded assembly on a machine loaded and performing the work for which it was designed.

7.2.3.2 For simulated service or field tests, the following shall be documented and recorded:

(1) The weldment drawing to which the test part or assembly was made;

(2) The material specifications of all items included in the assembly;

(3) The detailed welding procedure employed including welding process, filler metal, joint preparation, preheat, welding conditions, and sequence of weld passes (see Annex E);

(4) The type of loading applied, direction, and magnitude of forces (by calculation or instrumentation), frequency and total number of applications, or specific duration of the test;

(5) The results of visual examination and nondestructive examination of all welded joints subjected to loading in the test; and

(6) The results of destructive tests of weldments.

7.2.3.3 The welding procedure employed for the test assembly shall be considered qualified provided:

(1) Visual and any required nondestructive examinations, prior to test, meet the requirements of Clause 8, Inspection; and

(2) Specified examinations conducted after test assure performance criteria are met.

7.2.3.4 A test assembly welding procedure shall be requalified when a change in an essential variable exceeds the limits for the welding process (see 7.2.2.1 through 7.2.2.5).

7.3 Types of Tests and Purposes. The types of tests outlined below are to determine the mechanical properties and soundness of welded joints made under a given procedure specification.

7.3.1 Groove Welds. The tests for groove welds are as follows:

(1) Reduced-section tension test (for tensile strength);

(2) Root-bend test (for soundness);

(3) Face-bend test (for soundness);

(4) Side-bend test (for soundness);

(5) All-weld-metal test (for mechanical properties, electroslag or electrogas).

7.3.2 Fillet Welds. The test for fillet welds is macroetch test (for soundness and fusion).

7.4 Base Metal and Its Preparation. The base metal and its preparation for welding shall comply with the weld procedure specification. For all types of welded joints, the length of the weld and the dimensions of the base metal shall be such as to provide sufficient material for the required test specimens.

7.5 Position of Test Welds. All welds that will be encountered in actual construction shall be classified as being (1) flat, (2) horizontal, (3) vertical, or (4) overhead in conformance to the definitions of welding positions given in Figures 3 and 4. Each procedure shall be tested for each position for which it is to be qualified.

Copyright American Welding Society
Provided by IHS under license with AWS
No reproduction or networking permitted without license from IHS
Licensee=University of Texas Revised Sub Account/5620001114
Not for Resale, 08/29/2012 23:50:47 MDT

Tabulation of Positions of Groove Welds			
Position	Diagram Reference	Inclination of Axis	Rotation of Face
Flat	A	0° to 15°	150° to 210°
Horizontal	B	0° to 15°	80° to 150° 210° to 280°
Overhead	C	0° to 80°	0° to 80° 280° to 360°
Vertical	D E	15° to 80° 80° to 90°	80° to 280° 0° to 360°

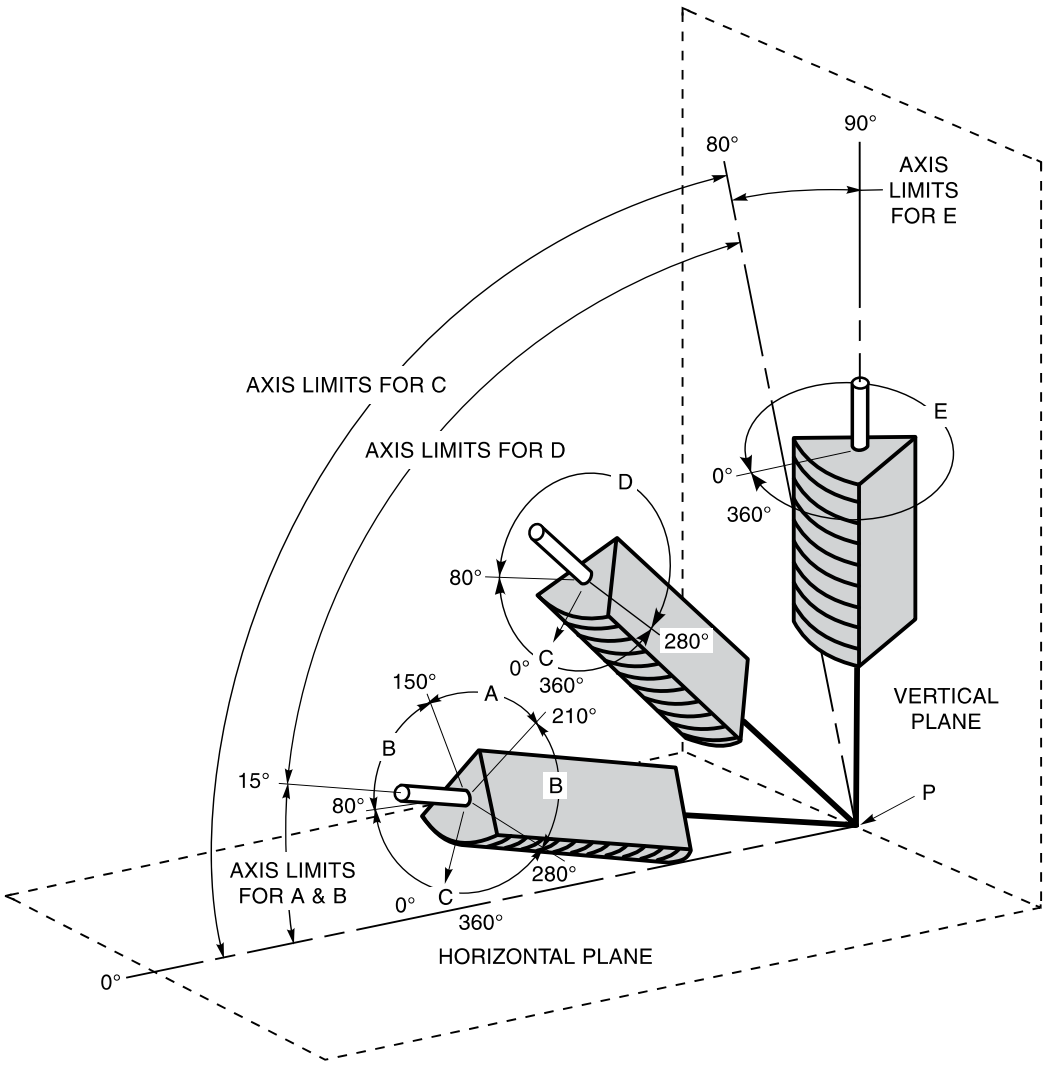

Notes:
1. The horizontal reference plane is always taken to lie below the weld under consideration.
2. The inclination of axis is measured from the horizontal reference plane toward the vertical reference plane.
3. The angle of rotation of the face is determined by a line perpendicular to the theoretical face of the weld which passes through the axis of the weld. The reference position (0°) of rotation of the face invariably points in the direction opposite to that in which the axis angle increases. When looking at point P, the angle of rotation of the face of the weld is measured in a clockwise direction from the reference position (0°).

Figure 3—Positions of Groove Welds

Copyright American Welding Society
Provided by IHS under license with AWS
No reproduction or networking permitted without license from IHS
Licensee=University of Texas Revised Sub Account/5620001114
Not for Resale, 08/29/2012 23:50:47 MDT

Tabulation of Positions of Fillet Welds			
Position	Diagram Reference	Inclination of Axis	Rotation of Face
Flat	A	0° to 15°	150° to 210°
Horizontal	B	0° to 15°	125° to 150° 210° to 235°
Overhead	C	0° to 80°	0° to 125° 235° to 360°
Vertical	D E	15° to 80° 80° to 90°	125° to 235° 0° to 360°

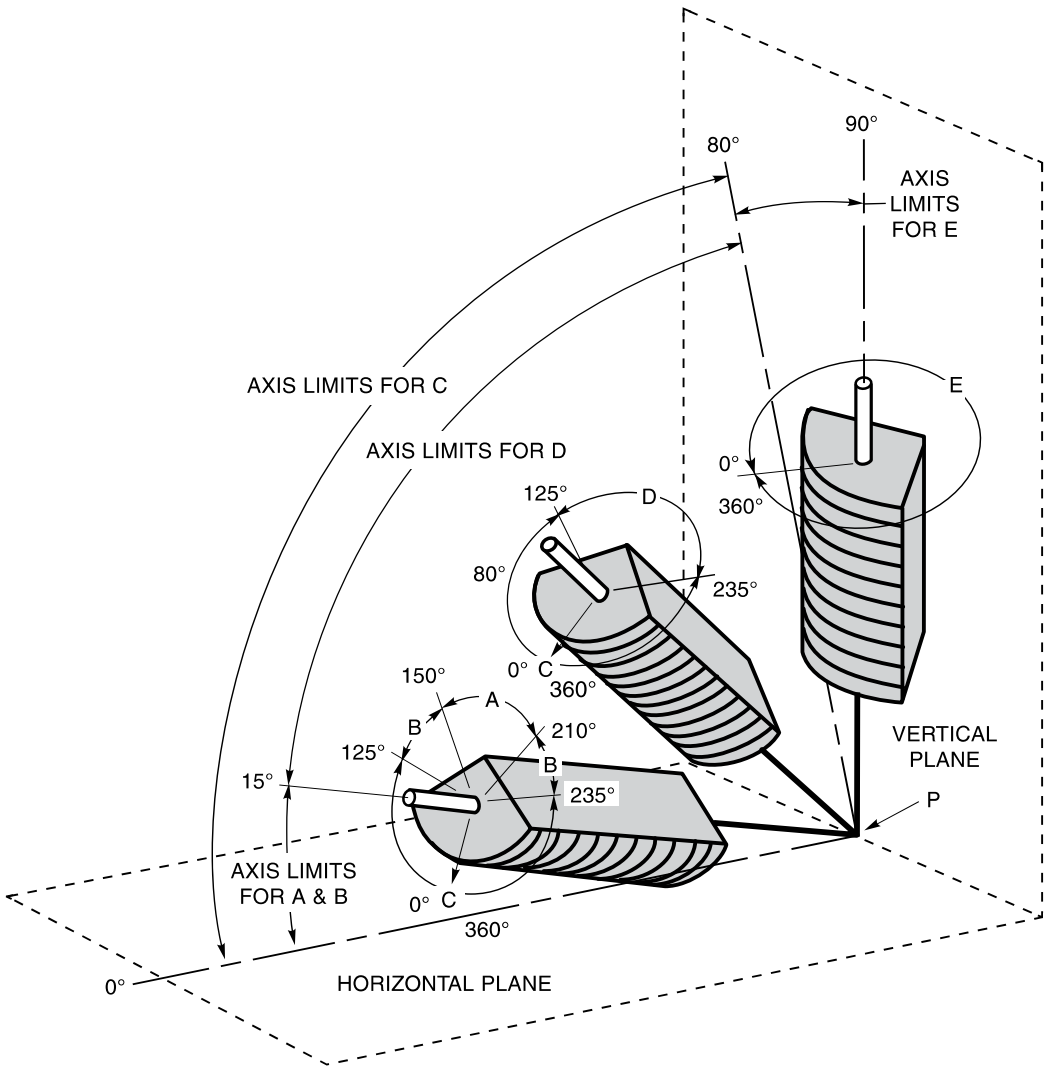

Figure 4—Positions of Fillet Welds

Copyright American Welding Society
Provided by IHS under license with AWS
No reproduction or networking permitted without license from IHS
Licensee=University of Texas Revised Sub Account/5620001114
Not for Resale, 08/29/2012 23:50:47 MDT

7.5.1 Groove Plate Test Welds. When making the tests to qualify groove welds (see Figure 5), the test plates shall be welded in each of the positions to be qualified as follows:

7.5.1.1 Position 1G (Flat). The test plates shall be placed in an approximately horizontal plane and the weld metal deposited from the upper side, as shown in Figure 5(A).

7.5.1.2 Position 2G (Horizontal). The test plates shall be placed in an approximately vertical plane, with the groove approximately horizontal, as shown in Figure 5(B).

7.5.1.3 Position 3G (Vertical). The test plates shall be placed in an approximately vertical plane with the groove approximately vertical, as shown in Figure 5(C).

7.5.1.4 Position 4G (Overhead). The test plates shall be placed in an approximately horizontal plane and the weld metal deposited from the underside, as shown in Figure 5(D).

7.5.2 Groove Pipe Test Welds. When performing the tests to qualify complete joint penetration groove welds in pipe or tubing (see Figure 6), the test pipe shall be welded in each of the positions to be qualified as follows:

7.5.2.1 Position 1G (Pipe Horizontal Rolled). The test pipe shall be placed with its axis horizontal and the groove approximately vertical. The pipe shall be rotated during welding so the weld metal is deposited from the upper side, as shown in Figure 6(A).

7.5.2.2 Position 2G (Pipe Vertical). The test pipe shall be placed with its axis vertical and the welding

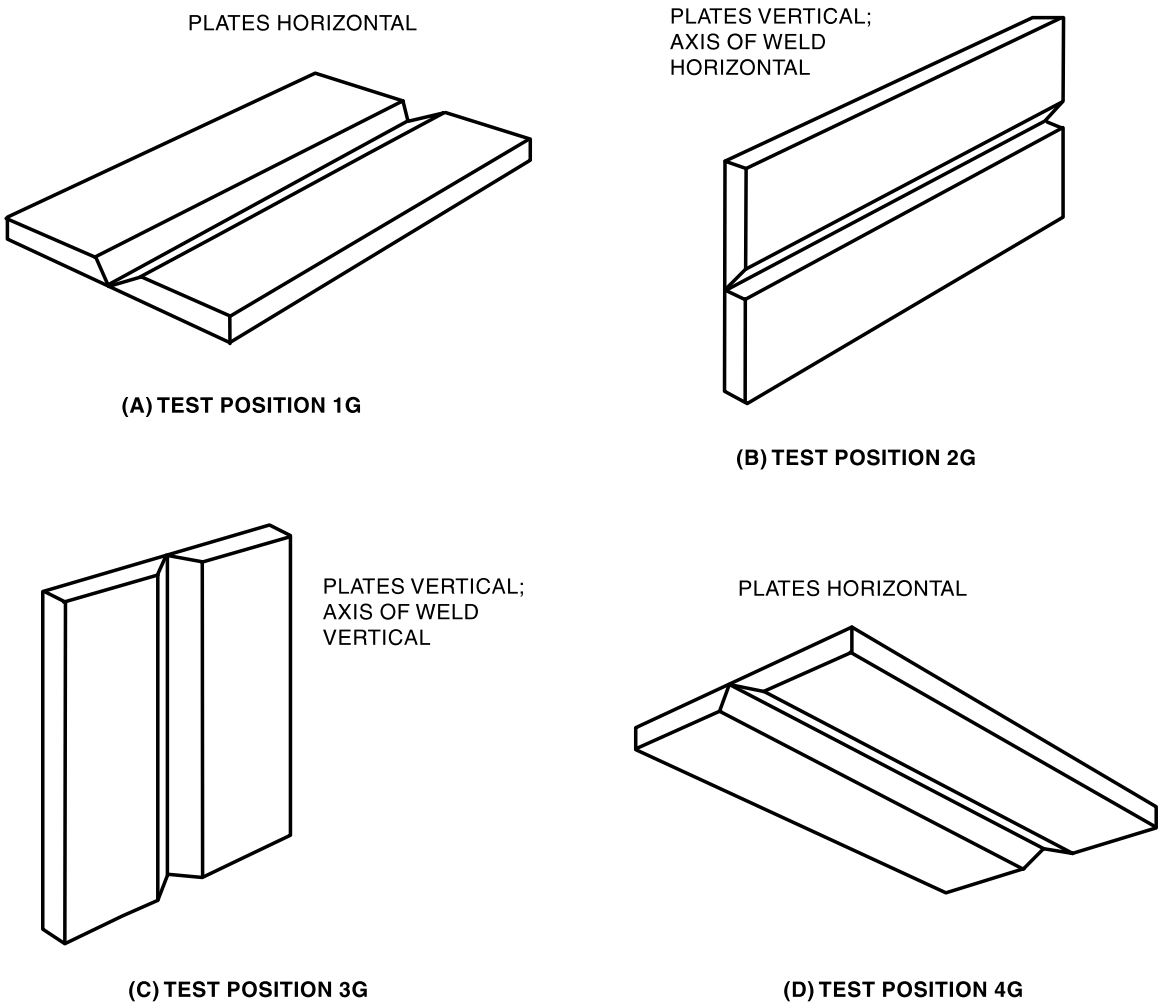

Figure 5—Positions of Test Plates for Groove Welds

Copyright American Welding Society
Provided by IHS under license with AWS
No reproduction or networking permitted without license from IHS
Licensee=University of Texas Revised Sub Account/5620001114
Not for Resale, 08/29/2012 23:50:47 MDT

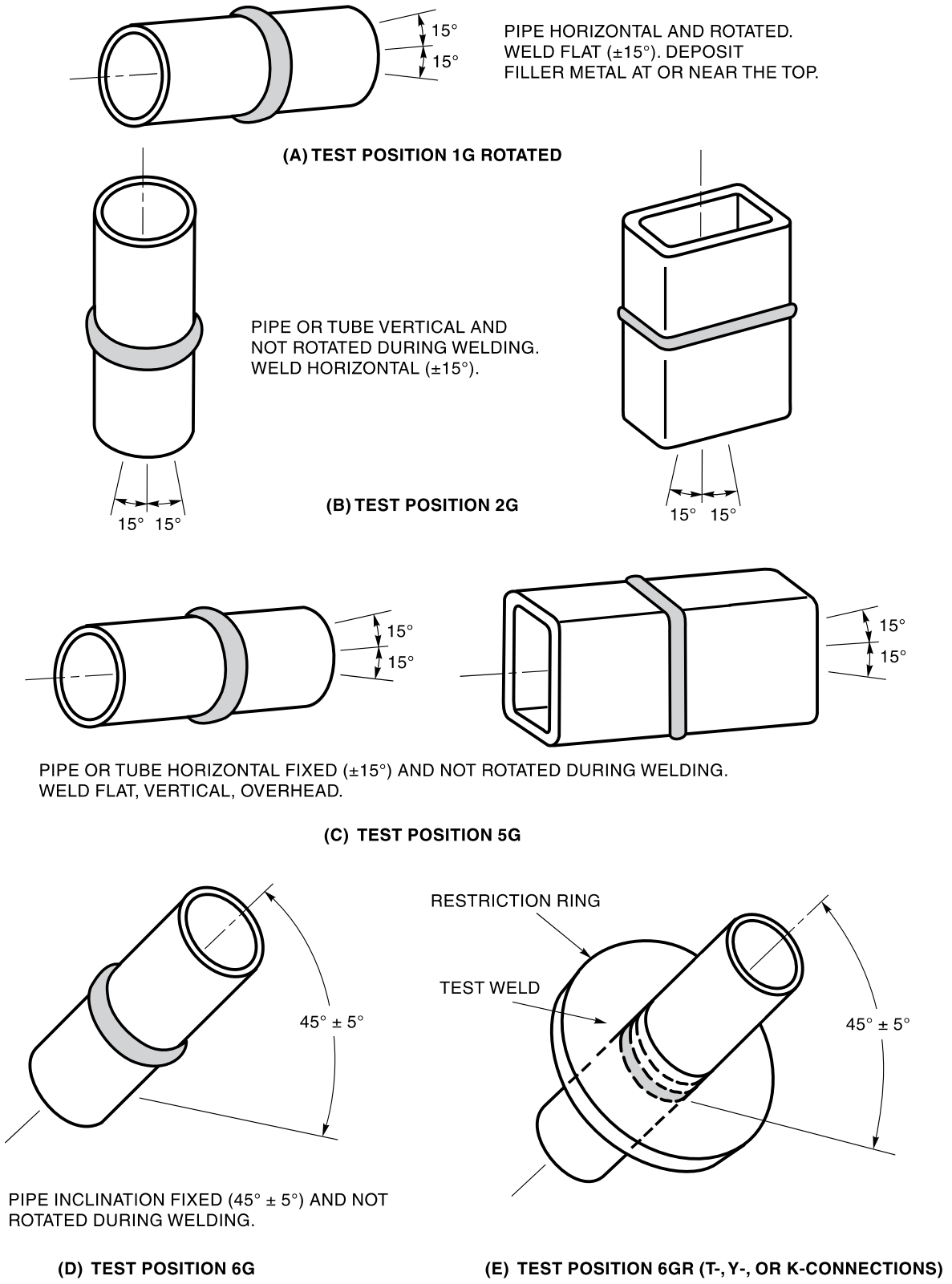

Figure 6—Positions of Test Pipe or Tubing for Groove Welds

Copyright American Welding Society
Provided by IHS under license with AWS
No reproduction or networking permitted without license from IHS
Licensee=University of Texas Revised Sub Account/5620001114
Not for Resale, 08/29/2012 23:50:47 MDT

groove approximately horizontal. The pipe shall not be rotated during welding, as shown in Figure 6(B).

7.5.2.3 Position 5G (Pipe Horizontal Fixed). The test pipe shall be placed with its axis horizontal and the groove approximately vertical. The pipe is not rotated during welding, as shown in Figure 6(C).

7.5.2.4 Position 6G (Pipe Inclined Fixed). The test pipe shall be inclined at 45° to the horizontal. The pipe is not rotated during welding as shown in Figures 6(D) and 7(E).

7.5.2.5 Position 6GR (Tubular Inclined Fixed T-, Y-, or K-Connections). The test pipe shall be inclined at 45° to the horizontal. The pipe or tube is not rotated during welding, as shown in Figure 6(E).

7.5.3 Fillet Welds. In making the tests to qualify fillet welds (see Figure 7), the test plates shall be welded in each of the positions to be qualified as follows:

7.5.3.1 Position 1F (Flat). The test plates shall be placed so that each fillet weld is deposited with its axis approximately horizontal and its throat approximately vertical, as shown in Figure 7(A).

7.5.3.2 Position 2F (Horizontal). The test plates shall be placed so that each fillet weld is deposited on the

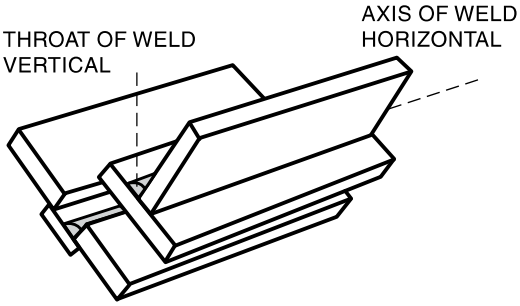

(A) FLAT POSITION 1F

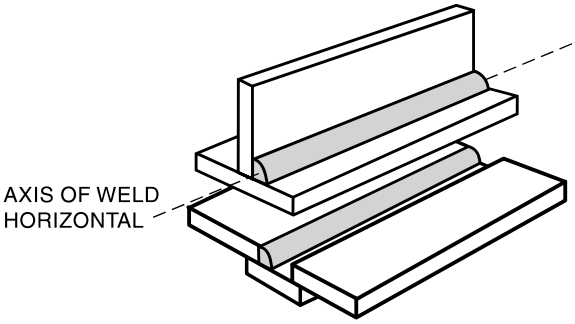

Note: One plate must be horizontal.

(B) HORIZONTAL POSITION 2F

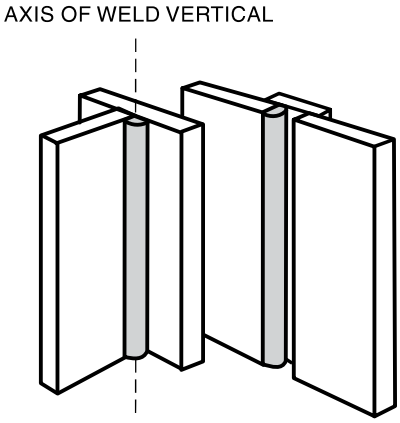

(C) VERTICAL POSITION 3F

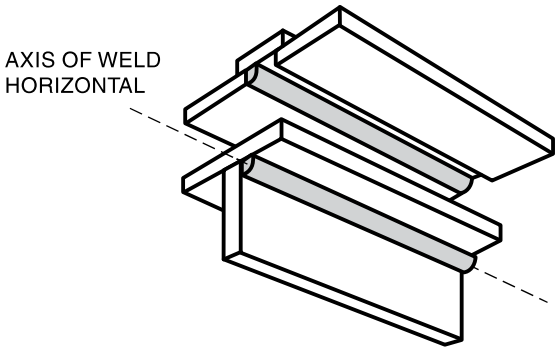

Note: One plate must be horizontal.

(D) OVERHEAD POSITION 4F

Figure 7—Positions of Test Plates for Fillet Welds

Copyright American Welding Society
Provided by IHS under license with AWS
No reproduction or networking permitted without license from IHS

Licensee=University of Texas Revised Sub Account/5620001114
Not for Resale, 08/29/2012 23:50:47 MDT

upper side of the horizontal surface and against the vertical surface, as shown in Figure 7(B).

7.5.3.3 Position 3F (Vertical). The test plates shall be placed in an approximately vertical plane and each fillet weld deposited on the vertical surface, as shown in Figure 7(C).

7.5.3.4 Position 4F (Overhead). The test plates shall be placed so that each fillet weld is deposited on the underside of the horizontal surface and against the vertical surface, as shown in Figure 7(D).

7.6 Welding of Test Samples. The welding procedure used to produce test samples shall comply in all respects with the welding procedure specification that will be used in production.

7.7 Test Specimens—Number, Type, and Preparation

7.7.1 Complete Joint Penetration Groove Welds

7.7.1.1 Table 8 shows the type and number of specimens to be tested to qualify a welding procedure. The range of thickness qualified for use in construction is based on the thickness of the test plate, pipe, or tubing used in making the qualification. The test plate shall be radiographically or ultrasonically tested before preparing the required mechanical test specimens.

7.7.1.2 Qualification of groove welds for T- or corner joints shall be butt joints having the same groove configurations as the T- or corner joints to be used in construction.

7.7.1.3 Test specimens shall be prepared by cutting the test plate, pipe, or tubing as shown in Figures 8 through 12, whichever is applicable. The specimens shall be prepared for testing in accordance with Figures 4.1 through 4.5 and Figures 6.4 through 6.7 in AWS B4.0, *Standard Methods for Mechanical Testing of Welds*, or AWS B4.0M, *Standard Methods for Mechanical Testing of Welds*, as applicable.

7.7.2 Partial Joint Penetration Groove Welds. A sample of the type of groove design which is the same as the joint to be used in construction shall be welded. The depth of groove need not exceed 1 in [25 mm]. A macroetch cross section shall be prepared to demonstrate that the designated effective throat is obtained, and the requirements of the procedure specifications are met.

7.7.3 Fillet Welds. For fillet welds, two test welds shall be made for each procedure and position to be used in construction. For each type of test weld, one shall be made with the maximum size single-pass fillet weld and one with the minimum size multiple-pass fillet weld that will be used in construction. For fillet welds, macroetch specimens shall be cut as shown in Figure 13. One end of each macroetch specimen shall be polished before etching.

7.8 Methods of Testing Specimens

7.8.1 Reduced-Section Tension Specimens. The tensile test specimen shall be tested in accordance with ASTM A 370, *Test Methods and Definitions for Mechanical Testing of Steel Products*.

7.8.2 Macroetch Tests. Etching shall be made with a suitable solution to give a clear definition of the weld.

7.8.3 Root, Face, and Side Bend Specimens. Each specimen shall be bent in one of the jigs shown in Figures 6.1 through 6.3 in AWS B4.0, *Standard Methods for Mechanical Testing of Welds*, or AWS B4.0M, *Standard Methods for Mechanical Testing of Welds*. Any convenient means may be used to move the plunger member with relation to the die member. Refer to AWS B4.0 or B4.0M for test procedures.

7.8.4 All-Weld-Metal Tension Test. The tensile test specimen shall be tested in accordance with ASTM A 370, *Test Methods and Definitions for Mechanical Testing of Steel Products*.

7.8.5 The radiographic procedure and technique shall conform to the requirements of 8.3.

7.8.6 The ultrasonic procedure and technique shall conform to the requirements of 8.4.

7.9 Test Results Required. The requirements for the test results shall be as follows:

7.9.1 Reduced-Section Tension Test. The tensile strength shall be not less than the minimum of the specified tensile range of the base metal used.

7.9.2 Root, Face, and Side Bend Tests. The convex surface (tension side) of the specimen shall be examined for the appearance of cracks or other open defects. Any specimen in which a crack or other open defect, exceeding 1/8 in [3 mm] as measured in any direction, is present after the bending shall be considered as having failed. Cracks occurring on the corners of the specimen during testing shall not be considered.

7.9.3 Macroetch Tests. The specimens shall be examined for defects, and any which have defects prohibited by Table 9 and 8.1 shall be considered as failed. The specimens shall have the designated effective throat for partial joint penetration groove welds. Fillet weld specimens shall show fusion to the root, but not necessarily beyond, and both legs shall conform to 8.2.8.2. Convexity and concavity shall not exceed the limits specified in 8.2.5.6.

Copyright American Welding Society
Provided by IHS under license with AWS
No reproduction or networking permitted without license from IHS
Licensee=University of Texas Revised Sub Account/5620001114
Not for Resale, 08/29/2012 23:50:47 MDT

Copyright American Welding Society
Provided by IHS under license with AWS
No reproduction or networking permitted without license from IHS

Table 8
Number and Type of Test Specimens and Range of Thickness Qualified—Procedure Qualification

Plate, Pipe, or Tube Size, As Welded		Plate, Pipe, or Tube Size, Qualified			Number of Sample Welds per Position	Visual Inspection	Number and Type of Tests Required				
Diameter in [mm]	Thickness (T) in [mm]	Diameter in [mm]	Thickness (T) in [mm] min.	Thickness (T) in [mm] max.			Reduced-Section Tension	Root Bend	Face Bend	Side Bend	All-Weld-Metal Tension
Plate Test (except Electroslag and Electrogas Processes)											
	≤3/8 [10]		1/8 [3]	2T	1	Yes	2	2	2	—	—
	>3/8 to ≤1 [>10 to ≤25]		1/8 [3]	2T	1	Yes	2	—	—	4	—
	>1 [25]		1/8 [3]	Unlimited	1	Yes	2	—	—	4	—
Plate Test (Electroslag and Electrogas Processes)											
	T		0.5T	1.1T	1	Yes	2	—	—	4	1
Pipe Test											
2 or 3 [50 or 75]	Sch. 40 or Sch. 80	≥3/4 to ≤4 [≥20 to ≤100]	1/8 [3]	3/4 [20]	2	Yes	2	2	2	—	—
6 or 8 [150 or 200]	Sch. 80 or Sch. 120	≥4 [100]	3/16 [5]	Unlimited	1	Yes	2	—	—	4	—
Pipe Test (Large Diameter Job Size)											
<24 [600]	<3/4 [20] ≥3/4 [20]	≥Test Diameter	1/8 [3] 3/8 [10]	2T Unlimited	1	Yes	2	—	—	4	—
≥24 [600]	<3/4 [20] ≥3/4 [20]	≥24 [600]	1/8 [3] 3/8 [10]	2T Unlimited	1	Yes	2	—	—	4	—

Licensee=University of Texas Revised Sub Account/5620001114
Not for Resale, 08/29/2012 23:50:47 MDT

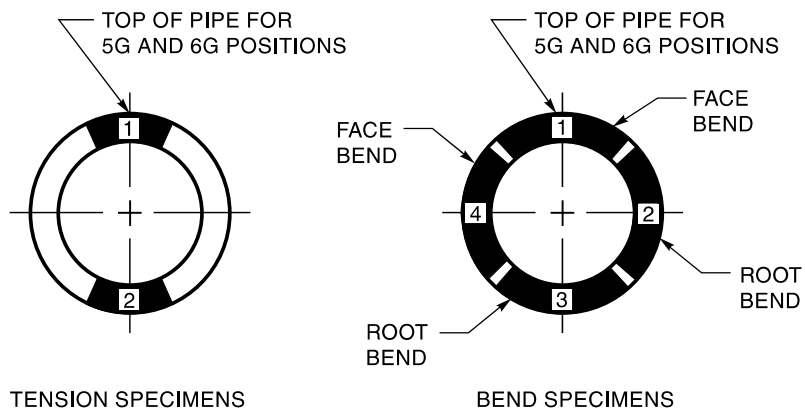

Figure 8—Location of Test Specimens on Welded Test Pipe—2 in or 3 in [50 mm or 75 mm] Diameter

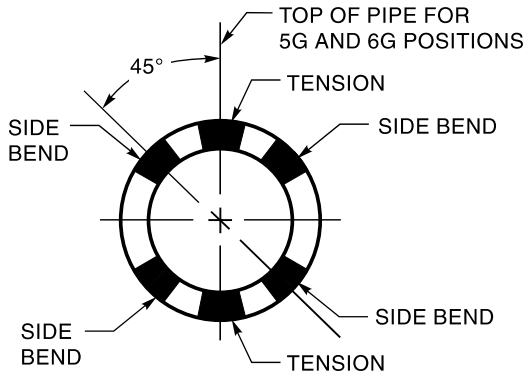

Figure 9—Location of Test Specimens on Welded Test Pipe—6 in or 8 in [150 mm or 200 mm] Diameter

7.9.4 All-Weld-Metal Tension (Electroslag and Electrogas Welding). The mechanical properties shall not be less than those of the base metals being welded.

7.9.5 Nondestructive Examination

7.9.5.1 For acceptable qualification, the weld, as revealed by radiographic or ultrasonic testing, shall conform to the applicable requirements of 8.3.6 or 8.4.6.

7.9.5.2 For acceptable qualification, the pipe weld, when inspected visually, shall conform to the following requirements:

(1) The weld shall be free of cracks.

(2) All craters shall be filled to the full cross section of the weld.

(3) The face of the weld shall be at least flush with the outside surface of the pipe, and the weld shall merge smoothly with the base metal. Undercut shall not exceed 1/64 in [0.4 mm]. Weld reinforcement shall not exceed the requirements of Table 10.

(4) The root of the weld shall be inspected and there shall be no evidence of cracks, incomplete fusion, or inadequate joint penetration.

(5) If the total weld thickness is equal to or greater than that of the base metal, the maximum root surface concavity shall be 1/16 in [2 mm] and the maximum melt-through shall be 1/8 in [3 mm].

7.10 Records. Records of the test results shall be kept by the Manufacturer or Fabricator, or both, and shall be available to those authorized to examine them.

7.11 Retests. If any one test specimen fails to meet the test requirements when all other test specimens meet the test requirements, two retests for that particular type of test specimen may be performed with specimens cut from the same procedure qualification test material. The results of both retest specimens shall meet the test requirements. For material over 1-1/2 in [40 mm] in thickness, failure of a specimen shall require testing of all specimens of the same type from two additional locations in the test material.

Copyright American Welding Society
Provided by IHS under license with AWS
No reproduction or networking permitted without license from IHS
Licensee=University of Texas Revised Sub Account/5620001114
Not for Resale, 08/29/2012 23:50:47 MDT

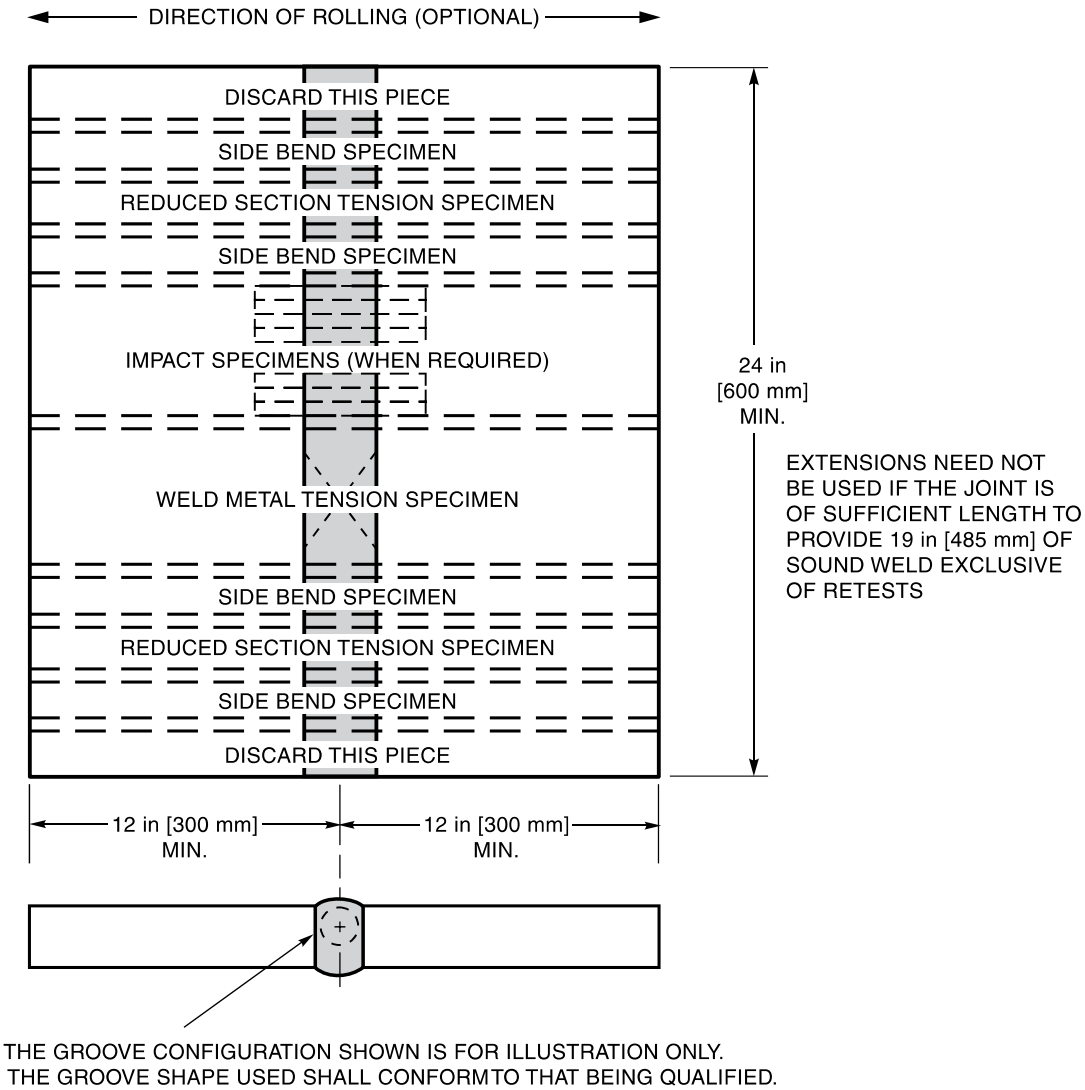

Figure 10—Location of Test Specimens on Welded Test Plate—Electroslag and Electrogas Welding—Procedure Qualification

Part B
Welder Qualification

7.12 General. The qualification tests described here are to determine the welder's ability to produce sound welds. It is not intended that the welder qualification tests be used as a guide for welding during actual fabrication. The fabrication welding shall be performed in conformance to the requirements of the welding procedure specification (see Annex E for suggested test forms).

7.13 Qualification Tests Required

7.13.1 The qualification tests for welders performing manual and semiautomatic operations shall be as follows:

7.13.1.1 Groove weld qualification test for plate of unlimited thickness as shown in Figures 14 and 15.

7.13.1.2 Groove weld qualification test for plate of limited thickness as shown in Figures 16 and 17.

7.13.1.3 For fillet weld qualification only, the welder shall weld a test plate according to Option 1 or 2, depending on the contractor's choice, as follows:

Copyright American Welding Society
Provided by IHS under license with AWS
No reproduction or networking permitted without license from IHS
Licensee=University of Texas Revised Sub Account/5620001114
Not for Resale, 08/29/2012 23:50:47 MDT

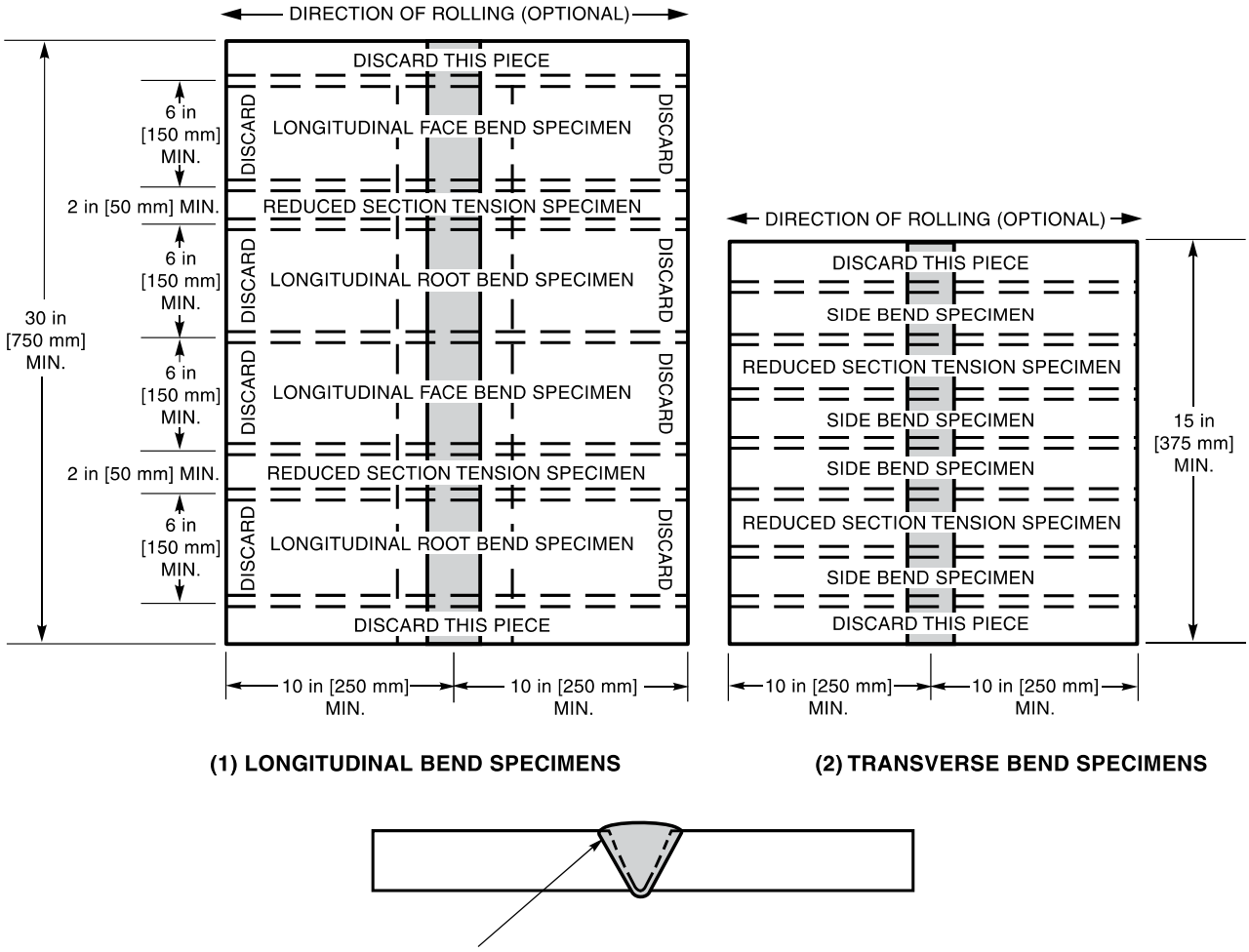

Figure 11—Location of Test Specimens on Welded Test Plate Over 3/8 in [10 mm] Thick—Procedure Qualification

(1) Option 1—Weld a T-shaped test plate in conformance to Figure 18.

(2) Option 2—Weld a fillet weld root-bend test plate in conformance to Figure 19.

7.13.2 The pipe or tubing qualification tests for welders performing manual or semiautomatic operations shall be as follows:

7.13.2.1 Groove weld qualification test for butt joints on pipe or square or rectangular tubing as shown in Figures 20 and 21.

7.13.2.2 Groove weld qualification test for T-, Y-, or K-connections on pipe or square or rectangular tubing as shown in Figure 22.

7.13.2.3 Groove weld qualification test for butt joints on square or rectangular tubing tested on flat plate.

7.13.3 The welder making a complete joint penetration plate groove weld procedure qualification test meeting the requirements is thereby qualified for that process and test position for plates and square or rectangular tubing of thicknesses equal to or less than the thickness of the test plate welded, unless it is 1 in [25 mm] or more in thickness, in which case, the welder will be qualified for all thicknesses.

7.13.4 The welder making a complete joint penetration groove weld pipe procedure qualification test, without backing strip, meeting the requirements is thereby qualified for that process and test position for piping

Copyright American Welding Society
Provided by IHS under license with AWS
No reproduction or networking permitted without license from IHS
Licensee=University of Texas Revised Sub Account/5620001114
Not for Resale, 08/29/2012 23:50:47 MDT

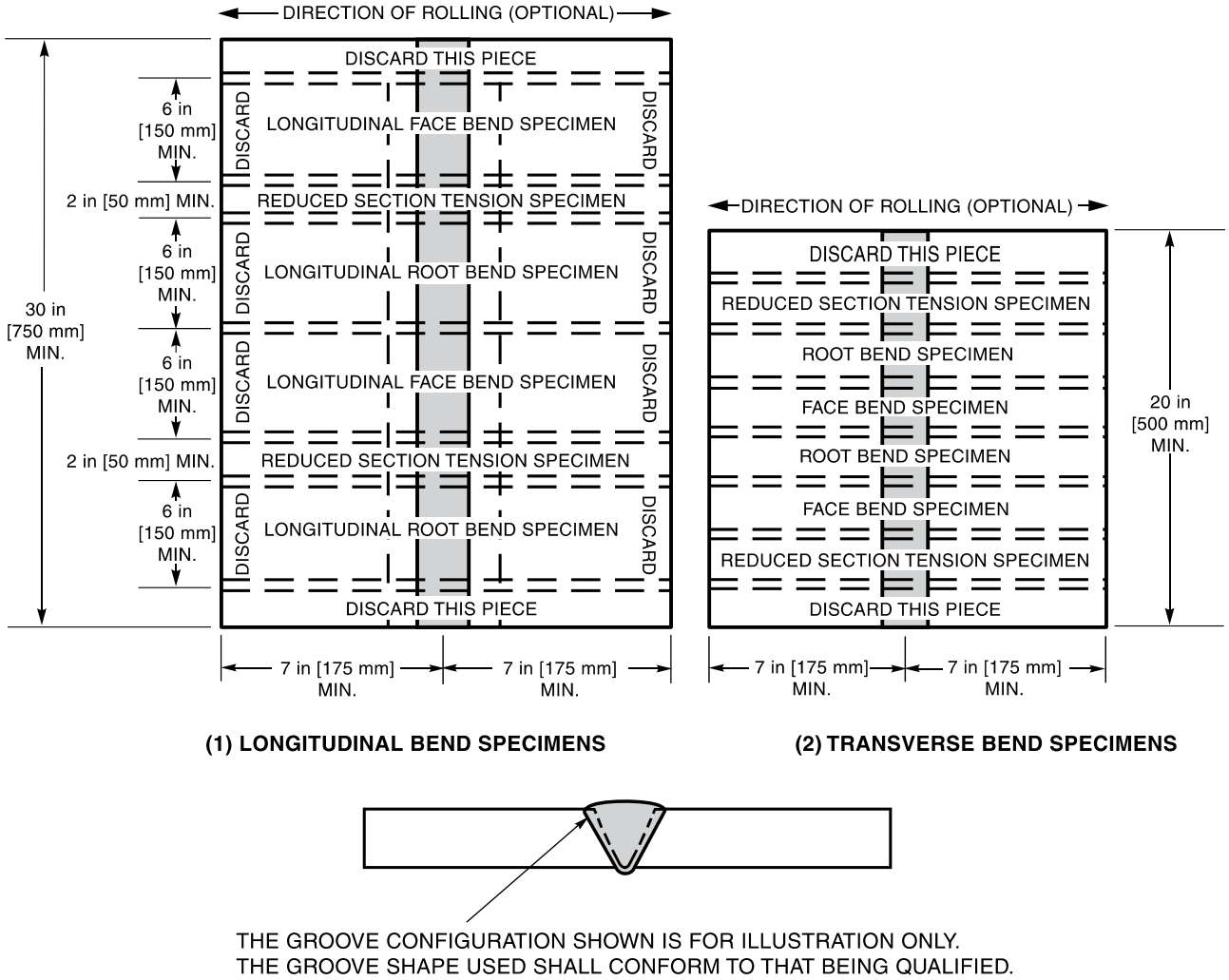

Figure 12—Location of Test Specimens on Welded Test Plate 3/8 in [10 mm] Thick and Under—Procedure Qualification

having a wall thickness equal to or less than the wall thickness of the test pipe welded, unless it is 3/4 in [20 mm] or more in thickness, in which case, the welder will be qualified for all thicknesses.

7.14 Limitation of Variables. For the qualification of a welder, the following rules shall apply:

7.14.1 A welder shall be qualified on each welding process used.

7.14.2 A welder qualified to weld a prequalified base metal in Table 2 shall be qualified to weld any base metal in the same material class, or a numerically lesser class designation, as follows:

(1) Material Class V: High-Strength Quenched and Tempered Alloy Steels;

(2) Material Class IV: High-Strength Low-Alloy Columbium, Vanadium Steels;

(3) Material Class III: High-Strength Low-Alloy Steels;

(4) Material Class II: Carbon Manganese Structural Steels;

(5) Material Class I: Carbon Steels.

Copyright American Welding Society
Provided by IHS under license with AWS
No reproduction or networking permitted without license from IHS
Licensee=University of Texas Revised Sub Account/5620001114
Not for Resale, 08/29/2012 23:50:47 MDT

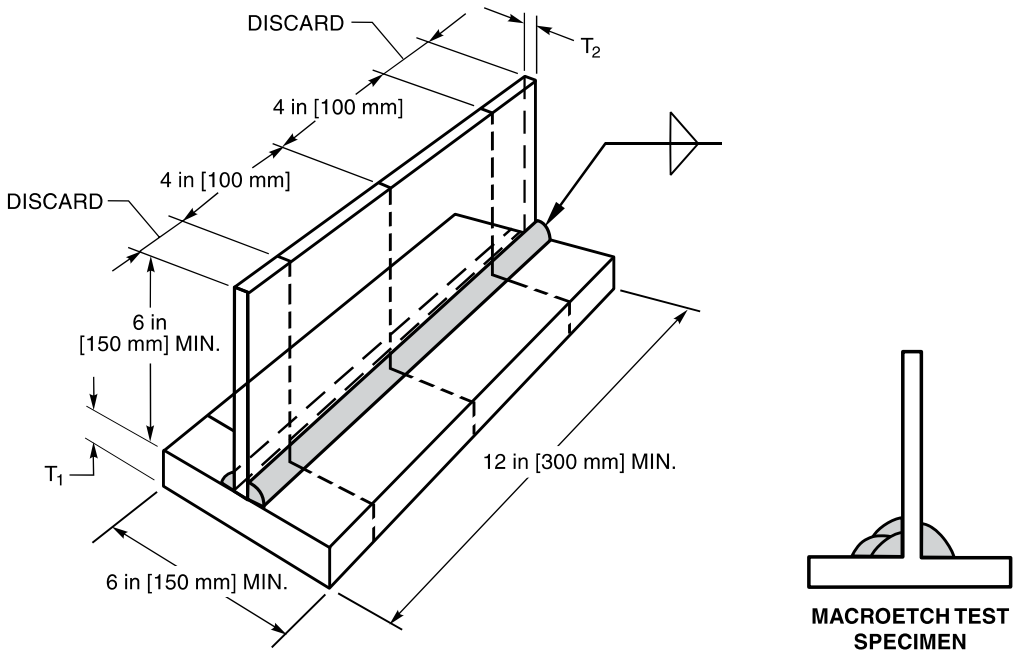

WELD SIZE, in [mm]	T_1 MIN.,[a] in [mm]	T_2 MIN.,[a] in [mm]
3/16 [5]	1/2 [13]	3/16 [5]
1/4 [6]	3/4 [20]	1/4 [6]
5/16 [8]	1 [25]	5/16 [8]
3/8 [10]	1 [25]	3/8 [10]
1/2 [13]	1 [25]	1/2 [13]
5/8 [16]	1 [25]	5/8 [16]
3/4 [20]	1 [25]	3/4 [20]
>3/4 [20]	1 [25]	1 [25]

[a] Where the maximum plate thickness used in production is less than the value shown in the table, the maximum thickness of the production pieces may be substituted for T_1 and T_2.

Figure 13—Fillet Weld Soundness Test for Procedure Qualification

7.14.3 A welder qualified for manual SMAW with an electrode identified in Table 11 shall be considered qualified to weld or tack weld with any other electrode in the same group designation or with any electrode listed in a numerically lesser group designation.

7.14.4 A welder qualified with an approved electrode and shielding medium combination shall be considered qualified to weld or tack weld with any other approved electrode and shielding medium combination for the process used in the qualification test.

7.14.5 A change in the position of welding, other than those changes previously qualified, shall require requalification.

7.14.6 A change from one pipe diameter and pipe wall thickness grouping to another, as shown in Table 8, shall require requalification.

7.14.7 When the pipe or tubing is in the 5G or 6G position, a change in the direction of welding, from bottom to top or top to bottom, shall require requalification.

Copyright American Welding Society
Provided by IHS under license with AWS
No reproduction or networking permitted without license from IHS
Licensee=University of Texas Revised Sub Account/5620001114
Not for Resale, 08/29/2012 23:50:47 MDT

Copyright American Welding Society
Provided by IHS under license with AWS
No reproduction or networking permitted without license from IHS

Table 9
Acceptance Criteria for Visual Inspection[a]

Extent of Visual Weld Defects Allowed

Weld Joint Class (See 4.1)	Cracks, Overlap	Undercut	Inadequate Joint Penetration, Incomplete Fusion	Surface Porosity Including Piping Porosity[b]	Weld Bead Irregularities and Profiles
Class I	None	Visually free from undercut in direction transverse to primary stress. 0.01 in [0.25 mm] maximum depth smoothly contoured undercut parallel to direction of primary stress.	Visually free form all evidence of incomplete joint penetration or other types of fusion defects.	The frequency of porosity shall not exceed one in 4 in [100 mm] of weld length, and the maximum diameter shall not exceed 1/32 in [1 mm].	See 8.2.5.6.
Class II	None	0.01 in [0.25 mm] maximum depth undercut transverse to direction of primary stress. 1/32 in [1 mm] maximum depth undercut parallel to direction of primary stress.	Visually free form all evidence of incomplete joint penetration or other types of fusion defects.	The frequency of porosity shall not exceed one in 4 in [100 mm] of weld length, and the maximum diameter shall not exceed 1/32 in [1 mm]	Rough, irregular welds and excess reinforcement to be ground smooth (see Figure 29).
Class III	None	1/32 in [1 mm] maximum depth undercut transverse and parallel to direction of primary stress.	1/3 T or 1/2 in [13 mm] maximum length incomplete penetration. Sum of all defects not to exceed 1 inch in 6 in [25 mm in 150 mm].	The sum of the diameters 1/16 in [2 mm] or greater shall not exceed 1/4 in [6 mm] in any linear inch of weld, or 1/2 in [13 mm] of weld or 1/2 inch in 12 in [13 mm in 300 mm] length.	Rough, irregular welds and excess reinforcement to be ground smooth (see Figure 29).
Class IV	None	1/32 in [1 mm] maximum depth undercut transverse and parallel to direction of primary stress.	2/3 T or 3/4 in [20 mm] maximum length incomplete penetration. Sum of all defects not to exceed 1 inch in 6 in [25 mm in 150 mm].	The sum of the diameters 3/32 in [2.5 mm] or greater shall not exceed 3/8 in [10 mm] in any linear inch of weld, or 3/4 inch in 12 in [20 mm in 300 mm] length.	—
Class V	None	1/32 in [1 mm] maximum depth undercut transverse to direction of primary stress. 1/4 T or 1/16 in [2 mm] whichever is less depth when parallel to primary stress.	1 T or 1 in [25 mm] maximum length incomplete penetration. Sum of all defects not to exceed 1 inch in 6 in [25 mm in 150 mm].	—	See Figure 29.
Class VI	None	1/32 in [1 mm] maximum depth undercut transverse to direction of primary stress. 1/4 T or 1/16 in [2 mm] whichever is less depth when parallel to primary stress.	1 T or 1 in [25 mm] maximum length incomplete penetration. Sum of all defects not to exceed 1 inch in 6 in [25 mm in 150 mm].	—	See Figure 29.

[a] Areas without text indicate nonapplicability.
[b] Piping porosity-elongated porosity whose major dimension lies in a direction approximately normal to the weld surface. Frequently it is referred to as "pin holes" when the porosity extends to the surface.

Licensee=University of Texas Revised Sub Account/5620001114
Not for Resale, 08/29/2012 23:50:47 MDT

Table 10
Maximum Weld Reinforcement for Butt Joints in Pipe

Pipe Wall Thickness, T		Reinforcement	
in	mm	in	mm
T ≤ 3/8	T ≤ 10	3/32	2.5
3/8 < T ≤ 3/4	10 < T ≤ 20	1/8	3
3/4 < T	20 < T	3/16	5

7.15 Groove Weld Plate Qualification Test for Plate of Unlimited Thickness. Joint detail shall be as follows: 1 in [25 mm] single-V-groove, 45° included angle, 1/4 in [6 mm] root opening with backing, as shown in Figure 14. For horizontal position qualification, the joint detail may be (contractor's option) as follows: single-V-groove, 45° groove angle, 1/4 in [6 mm] root opening with backing, as in Figure 15. Backing shall be at least 3/8 in × 3 in [10 mm × 75 mm] if radiography is used for testing without removal of backing. Backing shall be at least 3/8 in × 1 in [10 mm × 25 mm] for mechanical testing after the backing is removed. Minimum length of welding groove shall be 5 in [125 mm].

7.16 Groove Weld Plate Qualification Test for Plate of Limited Thickness. Joint detail shall be as follows: 3/8 in [10 mm] plate, single-V-groove, 45° included angle, 1/4 in [6 mm] root opening with backing, as in Figure 16. For horizontal position qualification, the joint detail may be (contractor's option) as follows: single-V-groove, 45° groove angle, 1/4 in [6 mm] root opening with backing, as in Figure 19. Backing shall be at least 3/8 in × 3 in [10 mm × 75 mm] if radiography is used for testing without removal of backing. It shall be at least 3/8 in × 1 in [10 mm × 75 mm] for mechanical testing, or, if radiography is used, for testing after the backing is removed. Minimum length of welding groove shall be 5 in [125 mm].

7.17 Groove Weld Qualification Test for Butt Joints on Pipe and Square or Rectangular Tubing. The joint detail shall be in accordance with a qualified welding procedure specification for a single-welded pipe butt joint weld or shall be as follows: for pipe diameter, wall thickness as required, single-V-groove, 60° included angle, 1/8 in [3 mm] maximum root face, and 1/8 in [3 mm] maximum root opening without backing strip, as in Figure 20; or single-V-groove, 60° included angle, and suitable root opening with backing as in Figure 21.

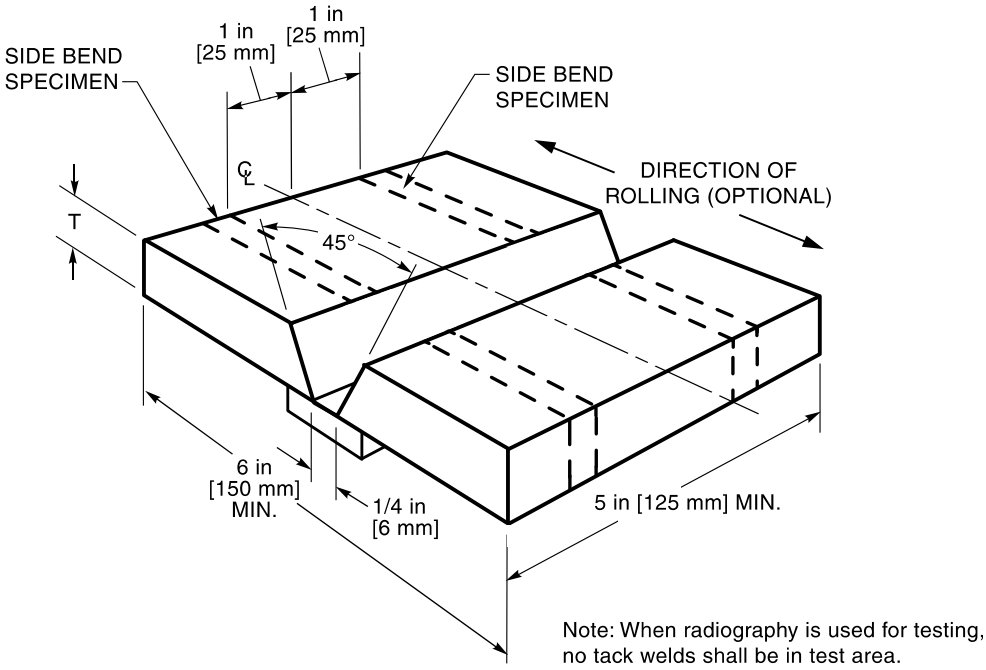

Figure 14—Test Plate for Unlimited Thickness—Welder Qualification

Copyright American Welding Society
Provided by IHS under license with AWS
No reproduction or networking permitted without license from IHS
Licensee=University of Texas Revised Sub Account/5620001114
Not for Resale, 08/29/2012 23:50:47 MDT

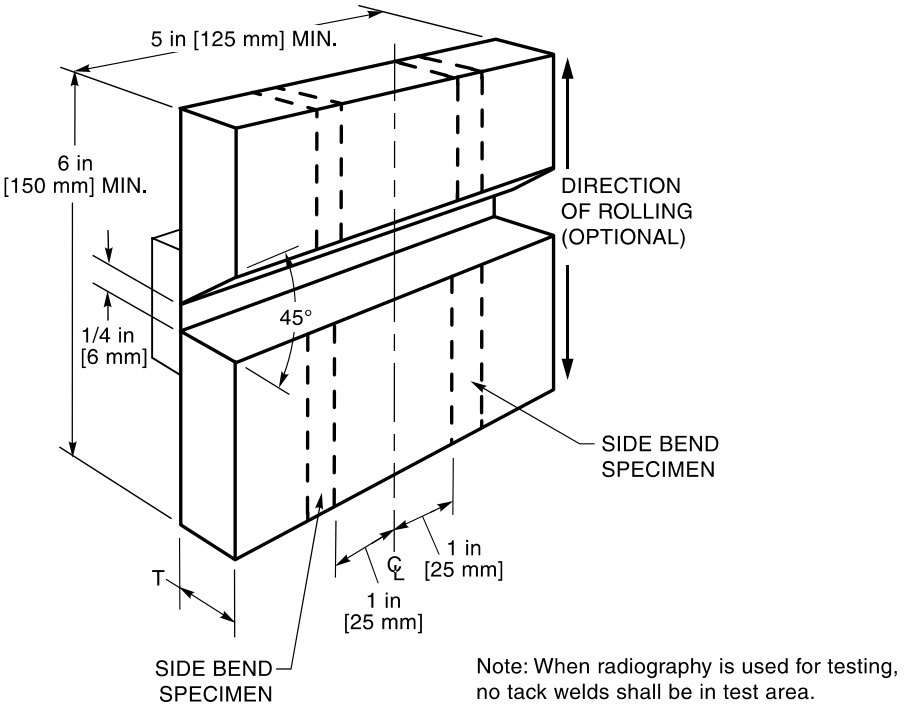

Figure 15—Optional Test Plate for Unlimited Thickness, Horizontal Position—Welder Qualification

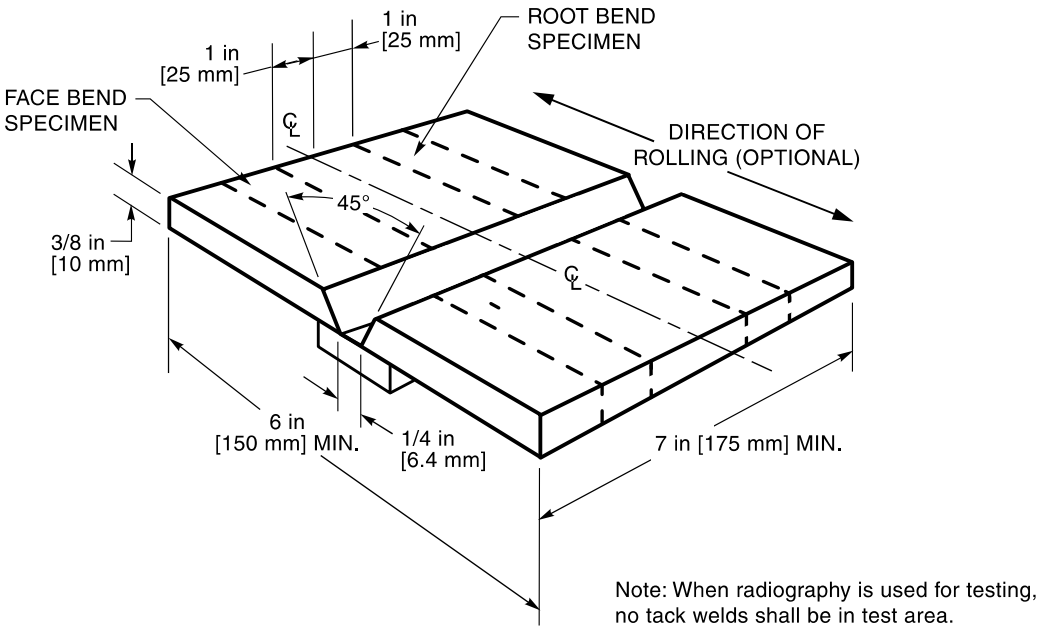

Figure 16—Test Plate for Limited Thickness, All Positions—Welder Qualification

Copyright American Welding Society
Provided by IHS under license with AWS
No reproduction or networking permitted without license from IHS
Licensee=University of Texas Revised Sub Account/5620001114
Not for Resale, 08/29/2012 23:50:47 MDT

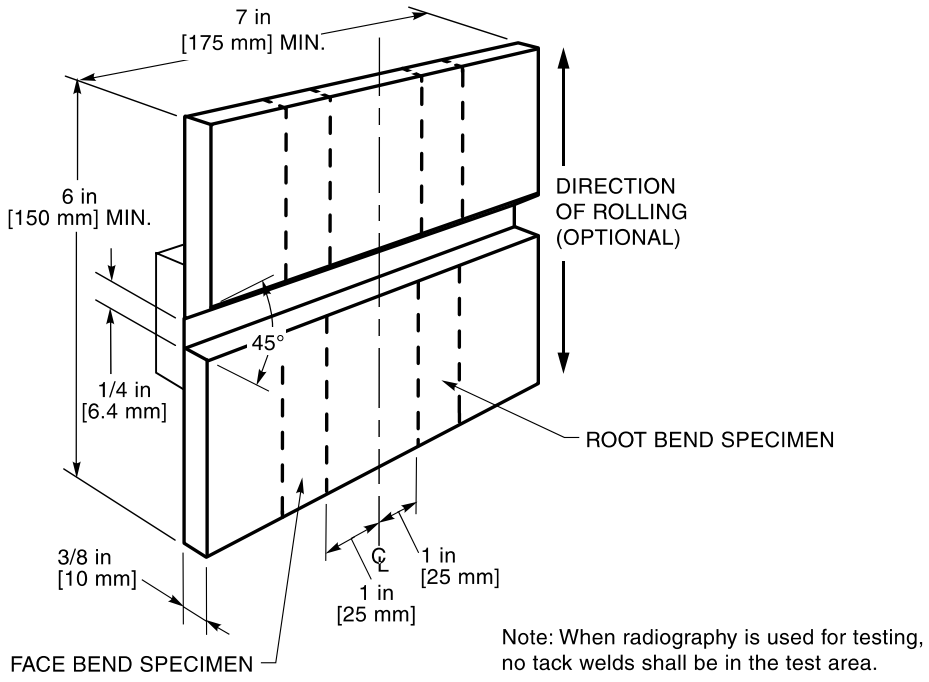

Figure 17—Optional Test Plate for Limited Thickness, Horizontal Position—Welder Qualification

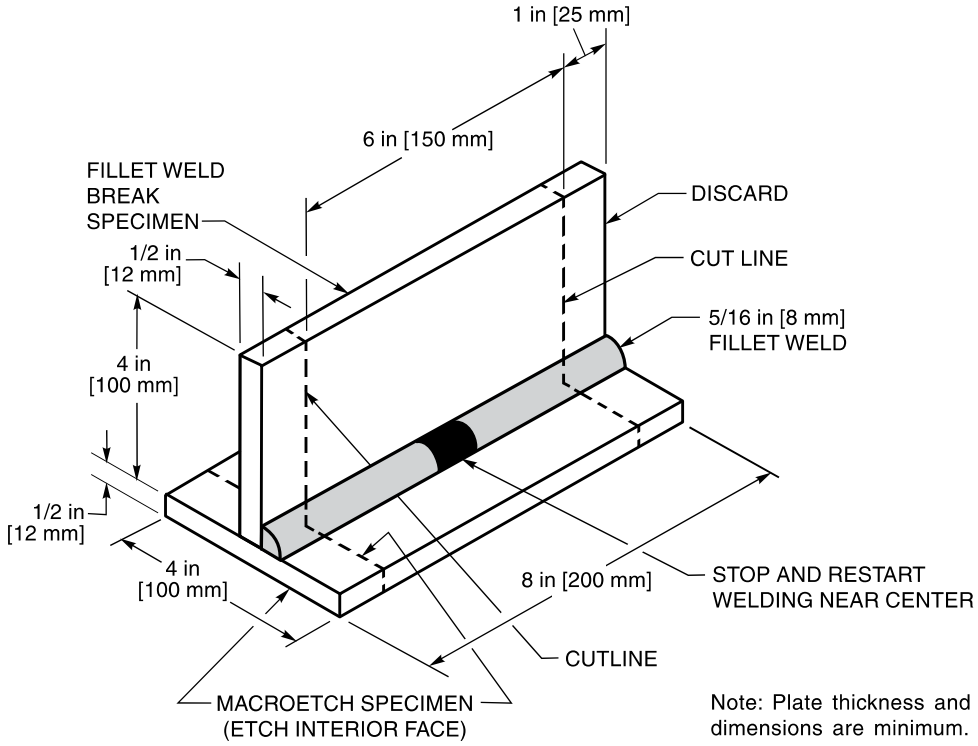

Figure 18—Fillet Weld Break and Macroetch Test Plate—Welder Qualification, Option 1

Copyright American Welding Society
Provided by IHS under license with AWS
No reproduction or networking permitted without license from IHS
Licensee=University of Texas Revised Sub Account/5620001114
Not for Resale, 08/29/2012 23:50:47 MDT

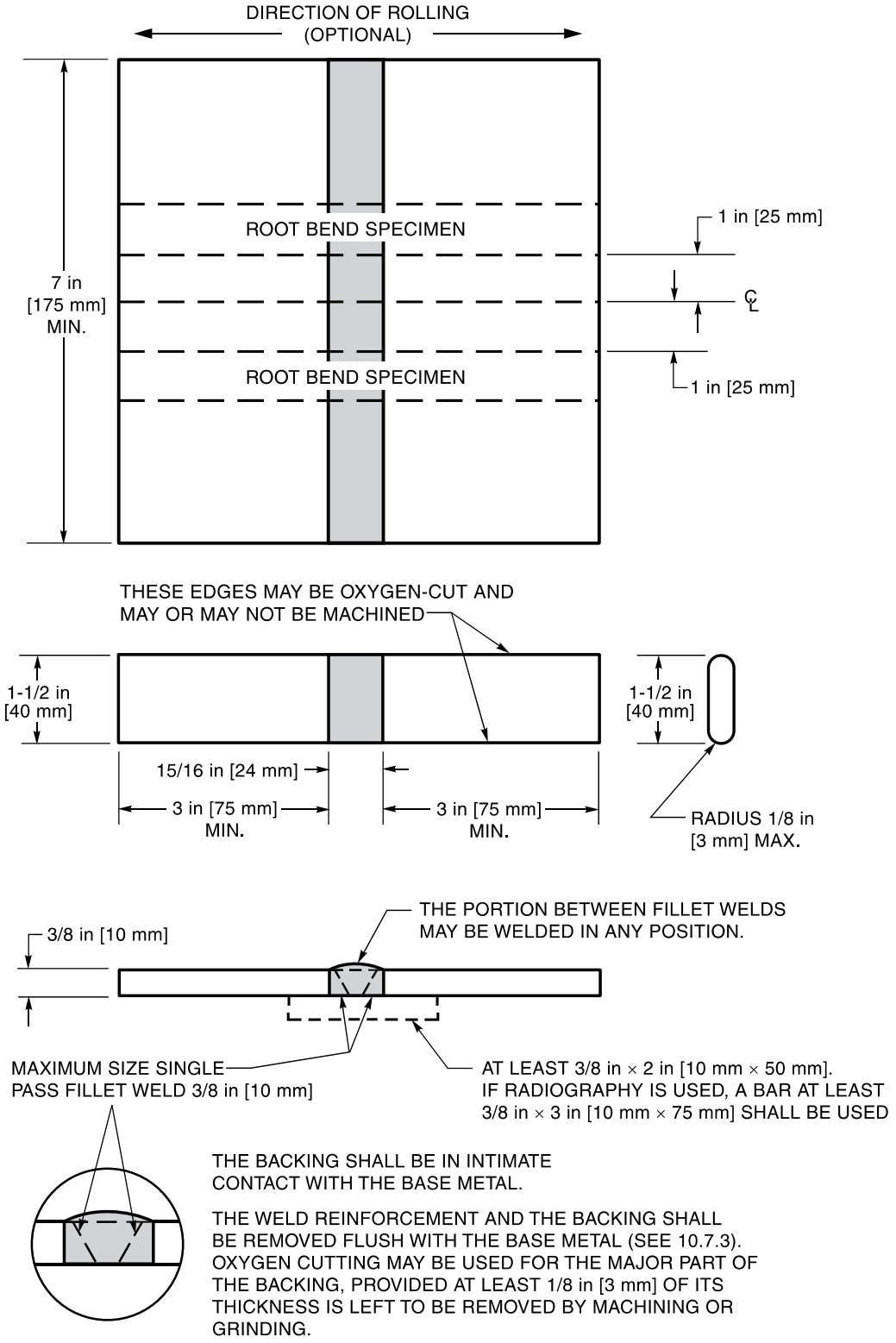

Figure 19—Fillet Weld Root-Bend Test Plate—Welder Qualification, Option 2

Copyright American Welding Society
Provided by IHS under license with AWS
No reproduction or networking permitted without license from IHS
Licensee=University of Texas Revised Sub Account/5620001114
Not for Resale, 08/29/2012 23:50:47 MDT

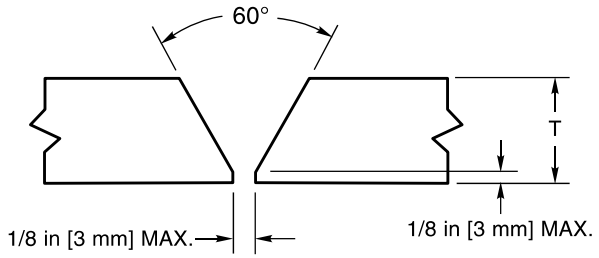

Figure 20—Pipe Test Butt Joint without Backing—Welder Qualification

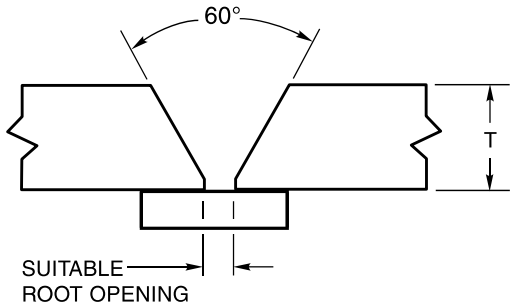

Figure 21—Pipe Test Butt Joint with Backing—Welder Qualification

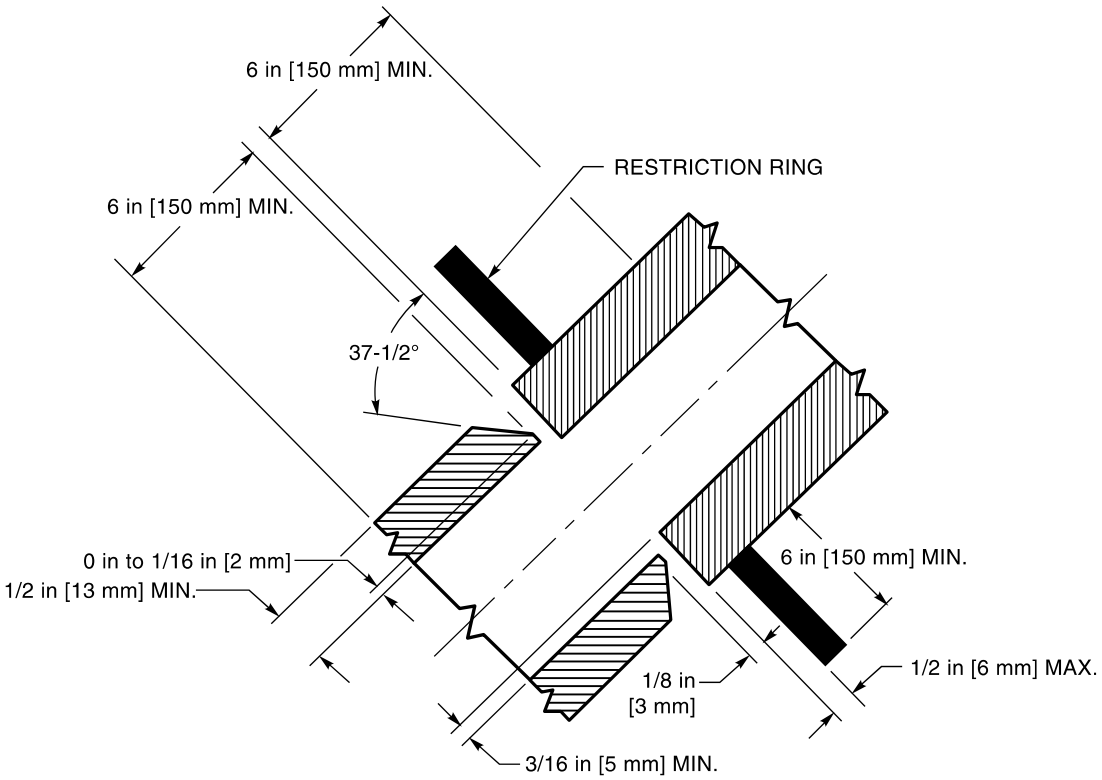

Figure 22—Test Joint for T-, Y-, and K-Connections on Pipe or Tubing—Welder Qualification

Copyright American Welding Society
Provided by IHS under license with AWS
No reproduction or networking permitted without license from IHS
Licensee=University of Texas Revised Sub Account/5620001114
Not for Resale, 08/29/2012 23:50:47 MDT

Table 11
SMAW Electrode Groups

Group Designation	AWS Electrode Classification[a]
F4	EXX15, EXX16, EXX18, EXX15-X, EXX16-X, EXX18-X, EXX18M
F3	EXX10, EXX11, EXX10-X, EXX11-X
F2	EXX12, EXX13, EXX14, EXX13-X, EXX19
F1	EXX20, EXX24, EXX27, EXX28 EXX20-X, EXX27-X

[a] The letters "XX" used in the classification designations represent the various strength levels in ksi (60, 70, 80, 90, 100, 110, and 120) of deposited weld metal.

7.18 Groove Weld Qualification Test for T-, Y-, or K-Connections on Pipe and Square or Rectangular Tubing. The joint shall be as follows: single-bevel-groove, 37.5° included angle with bevel on pipe or tube at least 1/2 in [13 mm] in thickness; the square edge pipe or tube shall be at least 3/16 in [5 mm] thicker than the beveled pipe thickness; 1/16 in [2 mm] maximum root face; and 1/8 in [3 mm] root opening. A restriction ring shall be placed on the thicker material within 1/2 in [13 mm] of the joint and shall extend at least 6 in [150 mm] beyond the surface of the pipe or tube (see Figure 22).

7.19 Fillet Weld Qualification Test for Fillet Welds Only

7.19.1 Option 1—Test Plate. T-test in accordance with Figure 18.

7.19.2 Option 2—Test Plate. Fillet weld root-bend test in accordance with Figure 19.

7.20 Position of Test Welds. See Table 12.

7.20.1 Groove Plate Test Welds

7.20.1.1 Qualification in the 1G (flat) position qualifies for flat position groove welding of plate, pipe, and tubing; flat and horizontal position fillet welding of plate; and flat and horizontal position fillet welding of plate, pipe, and tubing.

7.20.1.2 Qualification in the 2G (horizontal) position qualifies for flat and horizontal position groove, and flat and horizontal position fillet welding of plate, pipe, and tubing.

7.20.1.3 Qualification in the 3G (vertical) position qualifies for flat, horizontal, and vertical position groove and flat, horizontal, and vertical position fillet welding of plate.

7.20.1.4 Qualification in the 4G (overhead) position qualifies for flat and overhead position groove and flat, horizontal, and overhead position fillet welding of plate.

7.20.2 Groove Pipe Test Welds

7.20.2.1 Qualification in the 1G (pipe horizontal rolled) position qualifies for flat position groove welding of pipe, tubing, and plate; and flat and horizontal position fillet welding of plate, pipe, and tubing.

7.20.2.2 Qualification in the 2G (pipe vertical) position qualifies for flat and horizontal position groove and flat and horizontal position fillet welding of pipe, tubing, and plate.

7.20.2.3 Qualification in the 5G (pipe horizontal fixed) position qualifies for flat, vertical, and overhead position groove and flat, vertical, and overhead position fillet welding of pipe, tubing, and plate.

7.20.2.4 Qualification in the 6G (inclined fixed) position qualifies for all position groove and all position fillet welding of pipe, tubing, and plate.

7.20.2.5 Qualification for T-, Y-, or K-connections in the 6GR (inclined fixed) position qualifies for groove welding T-, Y-, or K-connections and groove and fillet welding in all positions of pipe, tubing, and plate.

7.20.3 Fillet Weld Test

7.20.3.1 Qualification in the 1F (flat) position qualifies for flat position fillet welding of plate, pipe, and tubing.

7.20.3.2 Qualification in the 2F (horizontal) position qualifies for flat and horizontal position fillet welding of plate, piping, and tubing.

7.20.3.3 Qualification in the 3F (vertical) position qualifies for flat, horizontal, and vertical position fillet welding of plate.

7.20.3.4 Qualification in the 4F (overhead) position qualifies for flat, horizontal, and overhead position fillet welding of plate.

7.20.4 Qualification on groove plate in 1G (flat) or 2G (horizontal) position also shall qualify for welding pipe butt joints with a backing in the same position qualified. If no backing is used in the groove plate test weld, this also shall qualify for groove welding pipe with or without backing in the same position qualified.

Copyright American Welding Society
Provided by IHS under license with AWS
No reproduction or networking permitted without license from IHS
Licensee=University of Texas Revised Sub Account/5620001114
Not for Resale, 08/29/2012 23:50:47 MDT

Table 12
Welder Qualification—Type and Position Limitations

Qualification Test		Type of Weld and Position of Welding Qualified[a]			
		Plate		Pipe	
Weld Type	Positions[b]	Groove	Fillet	Groove	Fillet
Plate (Groove)	1G	F	F, H	F	F, H
	2G	F, H	F, H	F, FH	F, H
	3G	F, H, V	F, H, V		F
	4G	F, OH	F, H, OH		F, H
	3G & 4G	All	All		F, H
Plate (Fillet)	1F		F		F
	2F		F, H		F, H
	3F		F, H, V		
	4F		F, H, OH		
	3F & 4F		All		
Pipe (Groove)	1G Rotated	F	F, H	F	F, H
	2G	F, H	F, H	F, H	F, H
	5G	F, V, OH	F, V, OH	F, V, OH	F, V, OH
	6G	Note c	Note c	Note c	Note c
	2G & 5G	Note c	Note c	Note c	Note c
	6GR	All	All	All	All

[a] Positions of welding: F = flat, H = horizontal, V = vertical, OH = overhead.
[b] See Figures 5, 6, and 7.
[c] Qualifies for all but groove welds for T-, Y-, and K-connections.

7.21 Base Metal. The base metal used shall comply with the class designation stated or implied in the procedure specification.

7.22 Test Specimens—Number, Type, and Preparation

7.22.1 The type and number of test specimens to be tested to qualify a welder by mechanical testing are shown in Table 13 together with the range of thickness that is qualified for use in construction by the thickness of the test plate, pipe, or tubing used in making the qualification. Radiographic testing of the test weld, may be used at the contractor's option instead of mechanical testing.

7.22.2 Guided bend test specimens shall be prepared by cutting the test plate, pipe, or tubing as shown in Figures 14 through 17, 19, and 23, whichever are applicable, to form specimens approximately rectangular in cross section. The specimens shall be prepared for testing in accordance with Figures 6.4 through 6.7 in AWS B4.0, *Standard Methods for Mechanical Testing of Welds*, or AWS B4.0M, *Standard Methods for Mechanical Testing of Welds*, whichever are applicable.

7.22.3 The fillet weld break and macroetch test specimens shall be cut from the test joints as shown in Figure 18. The end of the macroetch specimen shall be polished for etching.

7.22.4 If radiography is used instead of the prescribed bend tests, the weld reinforcement need not be ground or otherwise smoothed for inspection, unless its surface irregularities or juncture with the base metal would cause objectionable weld defects to be obscured in the radiograph. If the backing is removed for radiography, the root shall be ground flush with the base metal.

7.23 Method of Testing Specimens

7.23.1 Root, Face, and Side Bend Specimens. Each specimen shall be bent in one of the jigs shown in Figures 6.1 through 6.3 in AWS B4.0, *Standard Methods for Mechanical Testing of Welds*, or AWS B4.0M, *Standard Methods for Mechanical Testing of Welds*. Any convenient means may be used to move the plunger member with relation to the die member. Refer to AWS B4.0 or B4.0M for procedures.

Copyright American Welding Society
Provided by IHS under license with AWS
No reproduction or networking permitted without license from IHS
Licensee=University of Texas Revised Sub Account/5620001114
Not for Resale, 08/29/2012 23:50:47 MDT

Table 13
Number and Type of Specimens and Range of Thickness Qualified-Welder Qualification

Plate, Pipe, or Tube Size, As Welded			Plate, Pipe, or Tube Size, Qualified				Bend Tests, Number of Specimens							
				Thickness			All Positions Except 5G & 6G			5G & 6G Positions				
Type of Weld	Diameter in [mm]	Thickness in [mm]	Diameter in [mm]	Min. in [mm]	Max. in [mm]	Visual Inspection	Face	Root	Side	Face	Root	Side	T-Joint Break	Macroetch Test
Plate Test														
Groove	—	3/8 [10]	—	—	3/4 [20][a]	Yes	1	1	—	—	—	—	—	—
Groove	—	≥1 [25]	—	Unlimited[a]		Yes	—	—	2	—	—	—	—	—
Fillet[b]		See Fig. 18		Unlimited		Yes	—	—	—	—	—	—	1	1
Fillet[c]		See Fig. 19		Unlimited		Yes	2	—	—	—	—	—	—	—
Pipe Test														
Groove	2 or 3 [50 or 75]	Sch. 40 or Sch. 80	≤4 [100]	1/16 [2]	5/8 [16][a]	Yes	1	1	—	2	2	—	—	—
Groove	6 or 8 [300 or 400]	≥4 [100]	3/16 [5]	Unlimited[a]		Yes	—	—	2	—	—	4	—	—
Pipe Test (Large Diameter Job Size Pipe)														
Groove	≤4 [100]	Any	≥3/4 to ≤4 [≥20 to ≤100]	1/16 [2]	5/8 [16][a]	Yes	1	1	—	2	2	—	—	—
	>4 [100]	Any	1/2 diameter or 4 [100] min.[d]	3/16 [5]	Unlimited[a]	Yes	—	—	2	—	—	4	—	—
Groove	See Fig. 22		T-, Y-, and K-connections		Unlimited[a]	Yes	—	—	—	—	—	4	—	—

[a] Also qualifies for welding fillet welds on material of unlimited thickness.
[b] Option No. 1
[c] Option No. 2
[d] Minimum pipe size qualified shall not be less than 4 in [100 mm] or 1/2d, whichever is greater, where d is the diameter of the test pipe.

Note: Radiographic examination of the welder or welding operator test plate or test pipe may be made in lieu of the bend test.

Copyright American Welding Society
Provided by IHS under license with AWS
No reproduction or networking permitted without license from IHS
Licensee=University of Texas Revised Sub Account/5620001114
Not for Resale, 08/29/2012 23:50:47 MDT

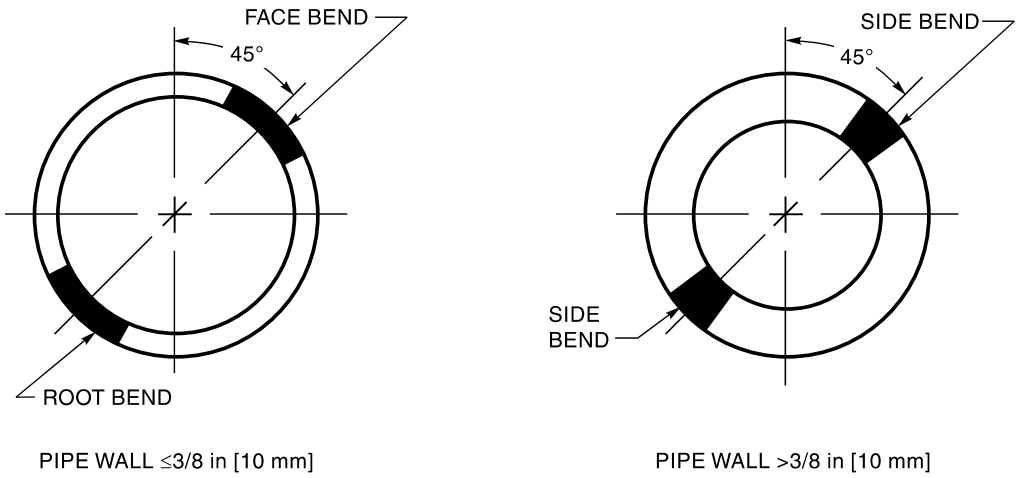

SPECIMENS FOR 1G AND 2G POSITIONS

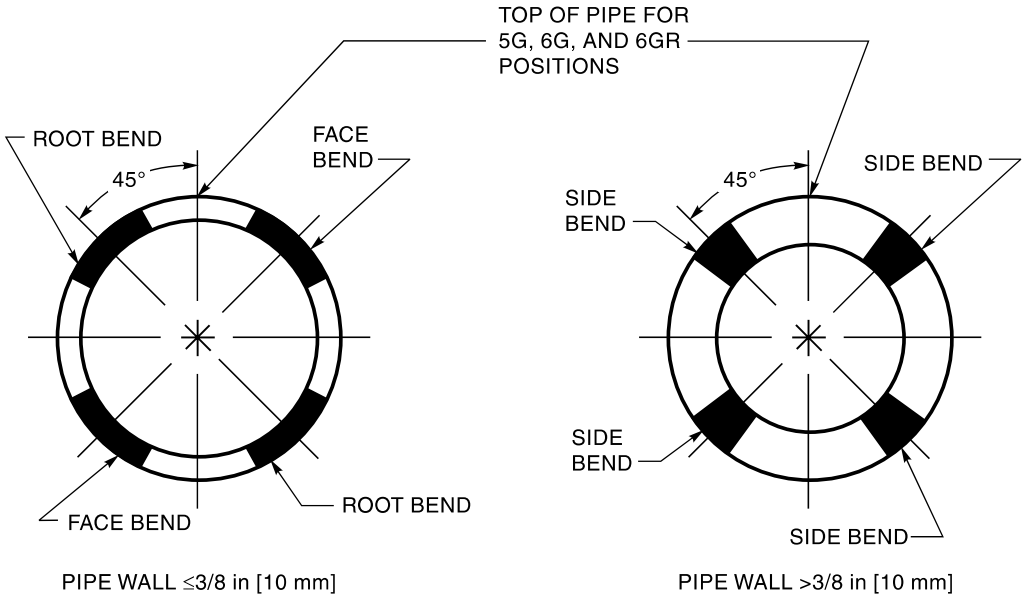

SPECIMENS FOR 5G, 6G, AND 6GR POSITIONS

Figure 23—Location of Test Specimens on Welded Test Pipe—Welder Qualification

Copyright American Welding Society
Provided by IHS under license with AWS
No reproduction or networking permitted without license from IHS
Licensee=University of Texas Revised Sub Account/5620001114
Not for Resale, 08/29/2012 23:50:47 MDT

7.23.2 Fillet Weld Break Test. The entire length of the fillet weld shall be examined visually and then the 6 in [150 mm] long specimen shall be loaded in such a way that the root of the weld shall be in tension (see Figure 18). The load shall be steadily increased or repeated until the specimen fractures or bends flat upon itself.

7.23.3 Macroetch Test. Etching shall be made by using a suitable solution to give a clear definition of the weld.

7.23.4 Radiographic Test. The radiographic procedure and technique shall conform to the requirements of Table 14, ASTM E 1032, *Standard Test Method for Radiographic Examination of Weldments*, and 8.3. Only the center half of the length of the test plate or 50% of the test pipe shall be subject to testing.

7.24 Test Results Required

7.24.1 Root, Face, and Side Bend Tests. The convex surface of the specimen shall be examined for the appearance of cracks or other open defects. Any specimen in which a crack or other open defect, exceeding 1/8 in [3 mm] as measured in any direction, is present after the bending shall be considered having failed. Cracks occurring on the corners of the specimen during testing shall not be considered.

7.24.2 Fillet Weld Break Test

7.24.2.1 To pass the visual examination, the fillet weld shall present a reasonably uniform appearance and shall be free of overlap, cracks, or excessive undercut. There shall be no visible porosity on the surface of the weld.

7.24.2.2 The specimen shall pass the test if it bends flat upon itself. If the fillet weld fractures, the fractured surface shall show complete penetration into the root of the joint. The fillet weld shall exhibit no incomplete fusion to the base metal nor any inclusion or porosity larger than 3/32 in [2.5 mm]. The sum of all inclusions and porosity shall not exceed 3/8 in [10 mm] in the 6 in [150 mm] long specimen.

7.24.3 Macroetch Test. The specimen shall be examined for defects, and if defects prohibited by 8.2.6 and 8.2.8 are found, it shall be considered as failed. The weld shall show fusion to the root but not necessarily beyond the root, and both legs shall be equal within 1/8 in [3 mm]. Convexity and concavity shall not exceed the limits specified in Clause 6, Workmanship, i.e., 1/16 in [2 mm] for a 5/16 in [8 mm] test weld.

7.24.4 Radiographic Test. For acceptable qualification, the weld, as revealed by the radiograph, shall conform to the requirements of 8.3.6.

7.24.5 For acceptable qualification, the weld, when examined visually, shall conform to the following requirements:

7.24.5.1 The weld shall be free of cracks.

7.24.5.2 All craters shall be filled to the full cross section of the weld.

7.24.5.3 The face of the weld shall be at least flush with the outside surface of the pipe, and the weld shall merge smoothly with the base metal. Undercut shall not exceed 1/64 in [0.4 mm]. Weld reinforcement shall not exceed the requirements of Table 10.

7.24.5.4 The root of the weld shall be inspected and there shall be no evidence of cracks, incomplete fusion, or inadequate joint penetration.

7.24.5.5 Provided the total weld thickness is equal to or greater than that of the base metal, the maximum root surface concavity shall be 1/16 in [2 mm], and the maximum melt-through shall be 1/8 in [3 mm].

7.25 Retests. A welder or welding operator who fails the performance test may be retested at the option of the manufacturer as indicated below:

7.25.1 If an immediate retest is permitted by the manufacturer without further training or practice, it shall consist of two test weldments for each position failed. Both test weldments shall be acceptable for the welder or welding operator to qualify.

7.25.2 Based on evidence that the welder or welding operator has completed further training or practice, one test weld for each position failed is permitted.

7.26 Period of Effectiveness. The welder's qualification specified herein shall be considered in effect indefinitely unless (1) the welder has not been engaged in a given process of welding for which the welder is qualified for a period exceeding six months, or unless (2) there is some specific reason to question a welder's ability. In case (1), the requalification test may be made only in the 3/8 in [10 mm] thickness.

7.27 Records. Records of the test results shall be kept by the Manufacturer or Fabricator, or both, and shall be available to those authorized to examine them.

Copyright American Welding Society
Provided by IHS under license with AWS
No reproduction or networking permitted without license from IHS

Licensee=University of Texas Revised Sub Account/5620001114
Not for Resale, 08/29/2012 23:50:47 MDT

Part C
Welding Operator Qualification

7.28 General. The welding operator qualification tests determine the welding operator's ability to produce sound welds. The welding operator qualification tests shall not be used as a guide for welding during welding fabrication. Fabrication welding shall be performed in conformance to the requirements of the welding procedure specification.

7.29 Limitations of Variables. For the qualification of a welding operator, the following rules shall apply:

7.29.1 A welding operator shall be separately qualified for each material class (see 2.2.1) and each welding process to be used.

7.29.2 For other than electroslag or electrogas welding, a welding operator qualified to weld with multiple electrodes shall be qualified to weld with a single electrode, but not vice versa.

7.29.3 An electroslag or electrogas welding operator qualified with an approved electrode and shielding medium combination shall be considered qualified to weld with any other approved electrode and shielding medium combination for the process used in the qualification test.

7.29.4 A change in the position in which welding is done, as defined in 7.5, shall require requalification (see Table 12).

7.30 Qualification Tests Required

7.30.1 The qualification test for a welding operator, for other than electroslag or electrogas welding, shall have a joint detail as follows (see Figure 24): 1 in [25 mm] plate, single-V-groove, 20° included groove angle, 5/8 in [16 mm] root opening with backing. Backing shall be at least 3/8 in × 3 in [10 mm × 75 mm] if radiography is used for testing without removal of the backing. It shall be at least 3/8 in × 1-1/2 in [10 mm × 40 mm] for mechanical testing, or if radiography is used for testing after the backing is removed. The minimum length of welding groove shall be 15 in [380 mm]. This test will qualify the welding operator for groove and fillet welding in materials of unlimited thickness.

7.30.2 The qualification test for an electroslag or electrogas welding operator shall consist of welding a joint of the maximum thickness of material to be used in construction; however, the thickness of the material of the test weld need not exceed 1-1/2 in [40 mm] (see Figure 25). If a test weld is made in the 1-1/2 in [40 mm] thickness, no test is needed for lesser thicknesses. This test shall qualify the welding operator for groove and fillet welds in materials of unlimited thickness.

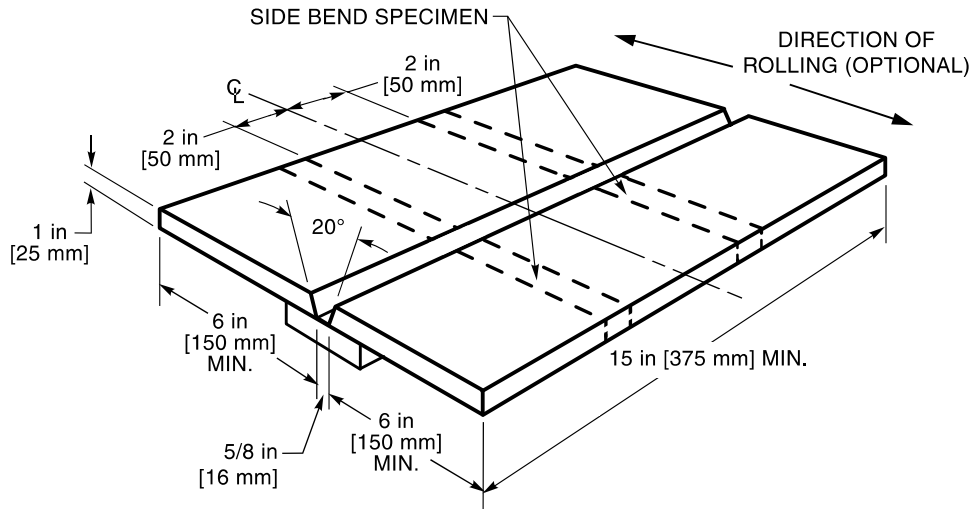

Notes:
1. When radiography is used for testing, no tack welds shall be in test area.
2. The joint configuration of a qualified groove weld procedure may be used in lieu of the groove configuration shown here.

Figure 24—Test Plate for Unlimited Thickness—Welding Operator Qualification

Copyright American Welding Society
Provided by IHS under license with AWS
No reproduction or networking permitted without license from IHS
Licensee=University of Texas Revised Sub Account/5620001114
Not for Resale, 08/29/2012 23:50:47 MDT

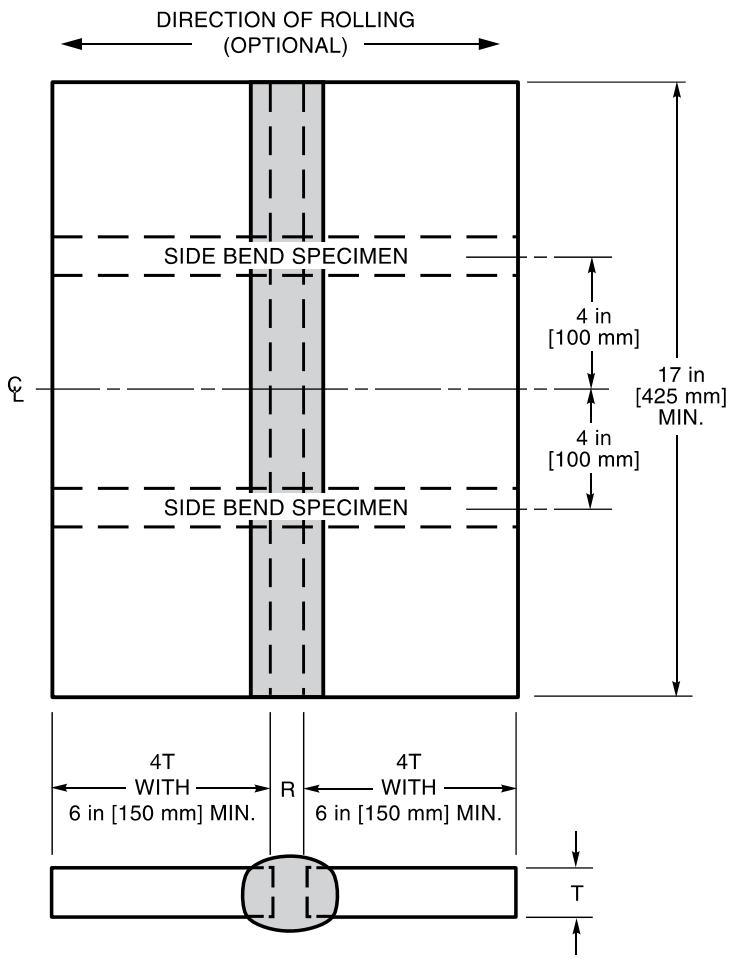

Notes:
1. Root opening "R" established by procedure specification.
2. T = maximum to be welded in construction but need not exceed 1-1/2 in [40 mm].
3. Extensions need not be used if joint is of sufficient length to provide 17 in [425 mm] of sound weld.

Figure 25—Butt Joint for Electroslag and Electrogas—Welding Operator Qualification

7.30.3 The welding operator making a complete joint penetration procedure qualification test meeting the requirements is thereby qualified for that process and test position for plate thicknesses equal to or less than the thickness of the test plate. If the test plate is 1-1/2 in [40 mm] or over in thickness for electroslag or electrogas welding or 1 in [25 mm] or over for all other processes, the welding operator will be qualified for all thicknesses.

7.31 Base Metal. The base metal used shall be carbon or low-alloy steel, or should comply with the procedure specification.

7.32 Test Specimens—Number, Type, and Preparation

7.32.1 Two side bend specimens shall be tested to qualify a welding operator by mechanical testing. The two side bend specimens shall be cut from the test plate approximately 4 in [100 mm] apart, or 8 in [200 mm] apart for electroslag and electrogas welding, at the middle of the length of the weld prepared for testing in conformance to Figures 24 and 25.

7.32.2 Radiographic testing of the test joint may be made at the contractor's option instead of the guided bend test. If radiography is used instead of the prescribed

Copyright American Welding Society
Provided by IHS under license with AWS
No reproduction or networking permitted without license from IHS
Licensee=University of Texas Revised Sub Account/5620001114
Not for Resale, 08/29/2012 23:50:47 MDT

bend tests, the weld reinforcement need not be ground or otherwise smoothed for inspection unless its surface irregularities or juncture with the base metal would cause objectionable weld defects to be obscured in the radiograph. If the backing is removed for radiography, the root shall be ground flush with the base metal.

7.33 Method of Testing Specimens

7.33.1 Side Bend Specimens. Each specimen shall be bent in one of the jigs shown in Figures 6.1 through 6.3 in AWS B4.0, *Standard Methods for Mechanical Testing of Welds*, or AWS B4.0M, *Standard Methods for Mechanical Testing of Welds*. Any convenient means may be used to move the plunger member with relation to the die member. The specimen shall be placed on the die member of the jig with the weld at mid span. Specimens shall be placed with that side showing the greater defects, if any, directed toward the gap. Refer to AWS B4.0 or B4.0M for procedures.

7.33.2 The radiographic procedure and technique shall conform to the requirements of 8.3.

7.34 Test Results Required

7.34.1 Side Bend Tests. The convex surface of the specimen shall be examined for the appearance of cracks or other open defects. Any specimen in which a crack or other open defect, exceeding 1/8 in [3 mm] as measured in any direction, is present after the bending shall be considered as having failed. Cracks occurring on the corners of the specimen during testing shall not be considered.

7.34.2 For acceptable qualification, the weld, as revealed by the radiograph, shall conform to the requirements of 8.3.6.

7.35 Retests. A welder or welding operator who fails the performance test may be retested at the option of the manufacturer as indicated below:

7.35.1 If an immediate retest is permitted by the manufacturer without further training or practice, it shall consist of two test weldments for each position failed. Both test weldments shall be acceptable for the welder or welding operator to qualify.

7.35.2 Based on evidence that the welder or welding operator has completed further training or practice; one test weld for each position failed is permitted.

7.36 Period of Effectiveness. The welding operator's qualification specified herein shall be considered in effect indefinitely unless (1) the welding operator has not been engaged in the given process of welding for which the welding operator is qualified for a period exceeding six months, or unless (2) there is some specific reason to question the welding operator's ability.

7.37 Records. Records of the test results shall be kept by the Manufacturer or Fabricator, or both, and shall be available to those authorized to examine them.

Part D
Tack Welder Qualification

7.38 General. The qualification test determines the tack welder's ability to produce sound tack welds. The tack welder qualification tests shall not be used as a guide for tack welding during welding fabrication. Fabrication tack welding shall be performed to conform to the requirements of the welding procedure specification.

7.39 Limitations of Variables. For the qualification of a tack welder, the following rules shall apply:

7.39.1 A tack welder shall be qualified on each welding process used.

7.39.2 A tack welder qualified to weld a prequalified base metal (see 2.2.1) shall be qualified to weld any base metal in the same material class or a numerically lesser class designation as listed below:

(1) Material Class V: High-Strength Quenched and Tempered Alloy Steels;

(2) Material Class IV: High-Strength Low-Alloy Columbium, Vanadium Steels;

(3) Material Class III: High-Strength Low-Alloy Steels;

(4) Material Class II: Carbon Manganese Structural Steels;

(5) Material Class I: Carbon Steels.

7.39.3 A tack welder qualified for manual SMAW with an electrode identified in Table 11 shall be considered qualified to tack weld with any other electrode in the same group designation or with any electrode listed in a numerically lesser group designation.

7.39.4 A tack welder qualified with an approved electrode and shielding medium combination shall be considered qualified to tack weld with any other approved electrode and shielding medium combination for the process used in the qualification test.

7.39.5 A tack welder shall be qualified for each process used.

7.39.6 A change in the position in which tack welding is done, as defined in 7.5, shall require requalification.

Copyright American Welding Society
Provided by IHS under license with AWS
No reproduction or networking permitted without license from IHS
Licensee=University of Texas Revised Sub Account/5620001114
Not for Resale, 08/29/2012 23:50:47 MDT

7.40 Qualification Tests Required. A tack welder shall be qualified by one test plate made in each position which is to be tack welded.

7.41 Base Metal. The base metal used shall be carbon or low-alloy steel, or should comply with the procedure specification.

7.42 Test Specimens—Number, Type, and Preparation. The tack welder shall make a 1/4 in [6 mm] maximum size tack weld approximately 2 in [50 mm] long on the fillet weld break specimen as shown in Figure 26 using a 5/32 in [4 mm] diameter electrode.

7.43 Method of Testing Specimens. A force shall be applied to the specimen as shown in Figure 27 until rupture occurs. The force may be applied by any convenient means. The surfaces of the weld and of the fracture shall be examined visually for defects.

7.44 Test Result Required

7.44.1 The tack weld shall present a reasonably uniform appearance and shall be free of overlap, cracks, or excessive undercut. There shall be no visible porosity on the surface of the tack weld.

7.44.2 The fractured surface of the tack weld shall show complete penetration into the root of the joint and shall exhibit no incomplete fusion to the base metal nor any inclusion or porosity larger than 3/32 in [2.5 mm] in greatest dimension.

7.44.3 A tack welder who passes the fillet weld break test shall be eligible to tack weld all types of joints for the process and in the position for which they have been qualified.

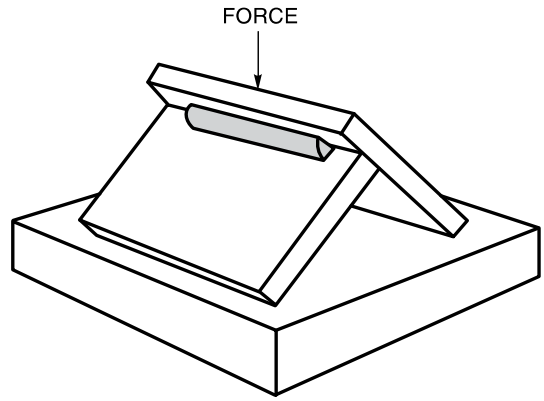

Figure 27—Method of Fracturing Fillet Weld Break Specimen—Tack Welder Qualification

7.45 Retest. In case of failure to pass the fillet weld break test, the tack welder may make one retest without additional training.

7.46 Period of Effectiveness. A tack welder who passes the fillet weld break test shall be considered eligible to perform tack welding indefinitely in the positions and with the processes for which the person is to be qualified unless there is some specific reason to question the tack

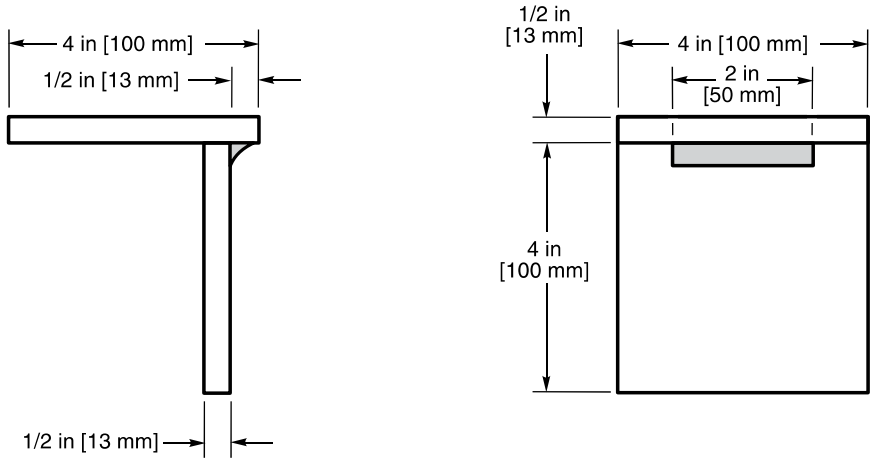

Figure 26—Fillet Weld Break Specimen—Tack Welder Qualification

Copyright American Welding Society
Provided by IHS under license with AWS
No reproduction or networking permitted without license from IHS
Licensee=University of Texas Revised Sub Account/5620001114
Not for Resale, 08/29/2012 23:50:47 MDT

welders ability. In such case, the tack welder shall be required to demonstrate the ability to make sound tack welds by passing the tack welding test.

7.47 Records. Records of the test results shall be kept by the Manufacturer or Fabricator, or both, and shall be available to those authorized to examine them.

8. Inspection

8.1 Introduction. The Manufacturer shall provide appropriate inspection personnel to assure that all fabrication by welding is performed in conformance to this specification. Inspectors responsible for acceptance or rejection of material and workmanship shall be qualified. The basis of inspector qualification shall be documented. If the Engineer elects to specify the basis of inspector qualification, it shall be so stated in the contract documents. The Manufacturer shall retain all inspection records for a reasonable time. If the buyer wants the Manufacturer to provide copies of material certification and inspection reports, welder and inspection qualifications, or other documentation, it shall be so stated in the contract. Any inspection requirements beyond those listed in Table 1 shall be noted on the drawings or so stated in the contract.

Material subject to delayed cracking, such as ASTM A 514 and A 517, shall have inspections performed not less than 48 h after the completed weld has cooled down to ambient temperatures.

8.2 Visual Inspection

8.2.1 General. The procedures and standards set forth in this subclause are to govern visual inspection of all classes of welds.

8.2.2 Personnel Qualifications. Personnel qualification shall be according to the following:

(1) Current or previous certification as an AWS Certified Welding Inspector (CWI) in conformance to the provisions of AWS QC1, *Specifications for Qualification and Certification of Welding Inspectors*; or

(2) Current or previous qualification by the Canadian Welding Bureau (CWB) to the requirements of the Canadian Standard Association (CSA) Standard W178.2, *Certification of Welding Inspectors*; or

(3) An individual who, by training or experience, or both, in metals fabrication, inspection and testing, is competent to perform the inspection of the work.

8.2.3 Extent of Inspection Required

8.2.3.1 All welds conforming to Joint Class I through VI of this specification shall be visually inspected in their entirety for discontinuities given in 8.2.4.1 per the acceptance criteria listed in Table 9.

8.2.3.2 All weldments containing Joint Class I through VI welds shall be visually inspected in their entirety for dimensional defects given in 8.2.4.2.

8.2.3.3 Visual inspection for cracks in welds and base metal and other defects should be aided by a strong light, magnifiers, or other devices as may be helpful.

8.2.3.4 Drawings with symbols shall be in conformance with AWS A2.4, *Standard Symbols for Welding, Brazing, and Nondestructive Examination*.

8.2.4 Visual Weld Discontinuities and Dimensional Defects. Weld discontinuities and dimensional defects are identified as follows:

8.2.4.1 Discontinuities in Welds

(1) Cracks,

(2) Undercut,

(3) Incomplete joint penetration,

(4) Incomplete fusion,

(5) Surface porosity,

(6) Weld bead irregularities and profiles, and

(7) Overlap.

8.2.4.2 Dimensional Defects

(1) Incorrect joint preparation,

(2) Incorrect weld size, and

(3) Incorrect final dimensions.

8.2.5 Definitions of Weld Discontinuities

8.2.5.1 Crack. A crack is a fracture-type discontinuity characterized by a sharp tip and high ratio of length and width to opening displacement.

(1) Figure 28 illustrates the various types of weld-related cracking, most of which can be detected by visual inspection.

(2) Weld metal cracks include longitudinal cracks, transverse cracks, and crater cracks.

(3) Base metal cracks include cracks adjacent to the weld edges or toe and transverse cracks extending from the weld metal into the base metal. Underbead cracks may not be detectable by visual inspection.

8.2.5.2 Undercut. Undercut is a groove melted into the base metal adjacent to the weld toe or weld face and left unfilled by weld metal as illustrated in Figure 29.

Copyright American Welding Society
Provided by IHS under license with AWS
No reproduction or networking permitted without license from IHS
Licensee=University of Texas Revised Sub Account/5620001114
Not for Resale, 08/29/2012 23:50:47 MDT

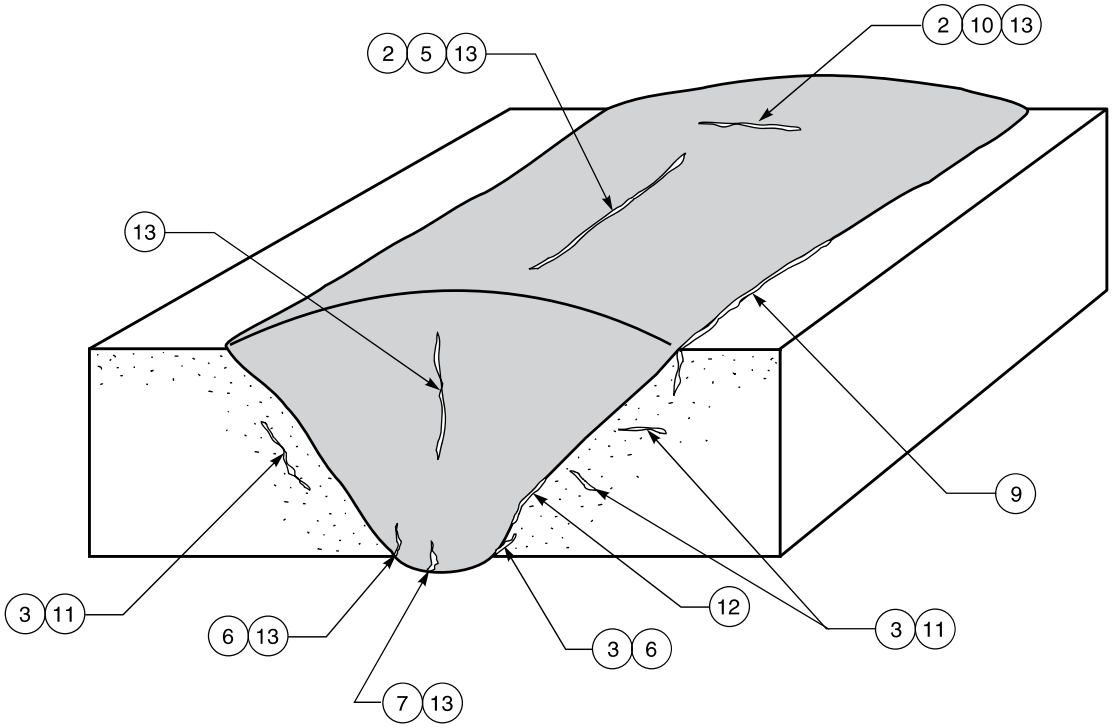

(A)

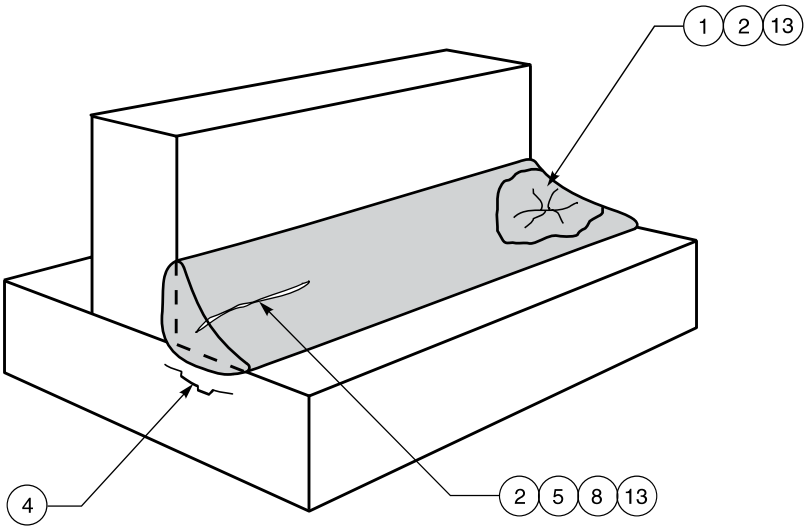

LEGEND:

1 CRATER CRACK
2 FACE CRACK
3 HEAT-AFFECTED-ZONE CRACK
4 LAMELLAR TEAR
5 LONGITUDINAL CRACK
6 ROOT CRACK
7 ROOT SURFACE CRACK
8 THROAT CRACK
9 TOE CRACK IN HEAT-AFFECTED ZONE
10 TRANSVERSE CRACK
11 UNDERBEAD CRACK
12 WELD INTERFACE CRACK
13 WELD METAL CRACK

(B)

Figure 28—Crack in Welded Joints

Copyright American Welding Society
Provided by IHS under license with AWS
No reproduction or networking permitted without license from IHS
Licensee=University of Texas Revised Sub Account/5620001114
Not for Resale, 08/29/2012 23:50:47 MDT

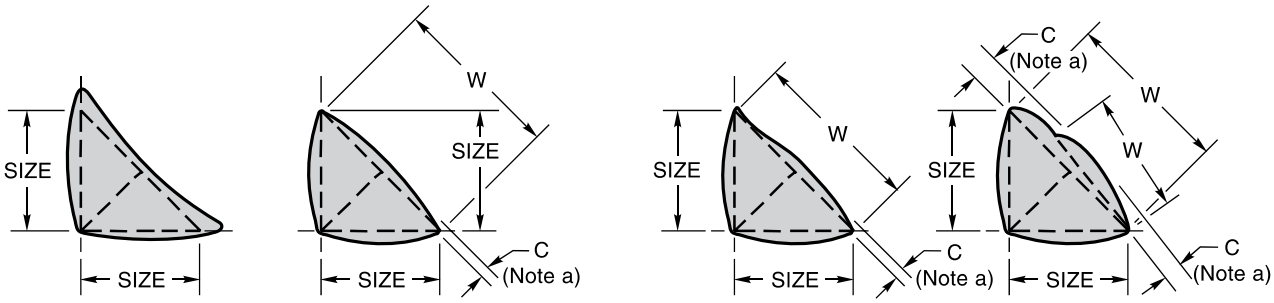

Note: For acceptance standards of fillet weld size, see 8.2.8.2.

(A) DESIRABLE FILLET WELD PROFILES **(B) ACCEPTABLE FILLET WELD PROFILES**

[a] Convexity, C, of a weld or individual surface bead with dimension W shall not exceed the value of the following table:

WIDTH OF WELD FACE OR INDIVIDUAL SURFACE BEAD, W	MAX. CONVEXITY, C
W ≤ 5/16 in [8 mm]	1/16 in [2 mm]
W > 5/16 in [8 mm] TO W < 1 in [25 mm]	1/8 in [3 mm]
W ≥ 1 in [25 mm]	3/16 in [5 mm]

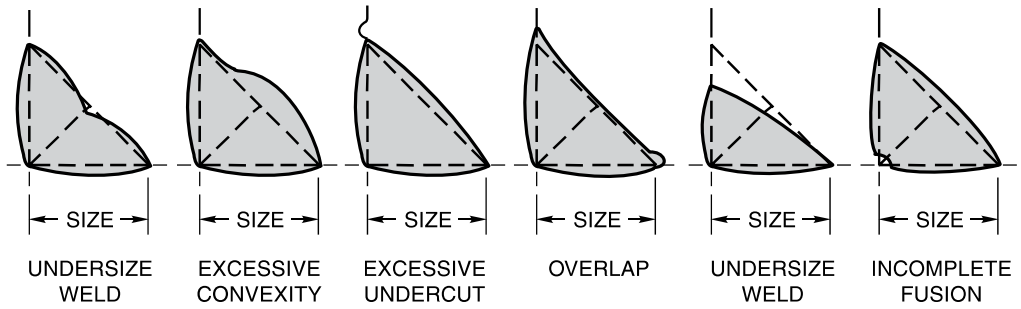

(C) UNACCEPTABLE FILLET WELD PROFILES

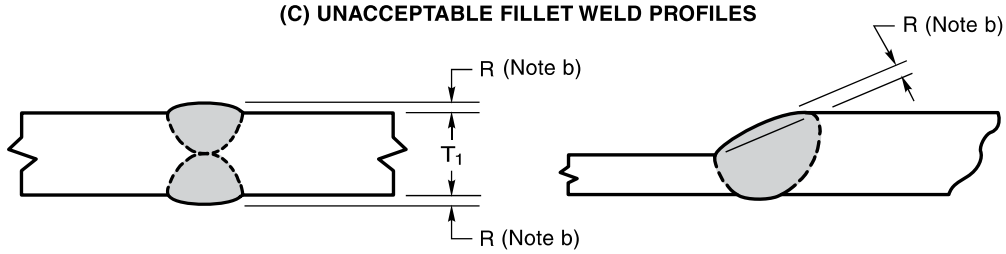

[b] Reinforcement R shall not exceed 1/8 in [3 mm].

(D) ACCEPTABLE GROOVE WELD PROFILE IN BUTT JOINT

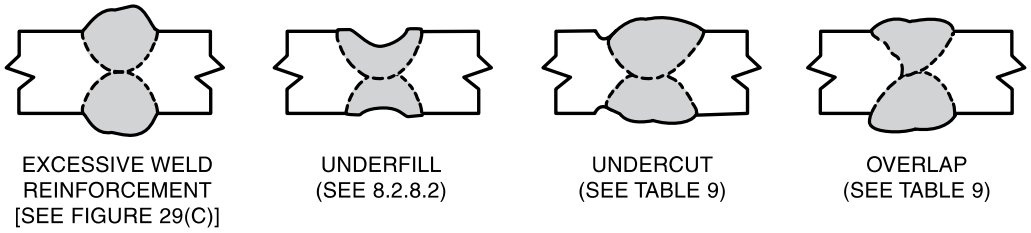

(E) UNACCEPTABLE GROOVE WELD PROFILES IN BUTT JOINTS

Note: All welds shall meet the visual acceptance criteria of Table 6.1.

Figure 29—Acceptable and Unacceptable Weld Profiles

Copyright American Welding Society
Provided by IHS under license with AWS
No reproduction or networking permitted without license from IHS
Licensee=University of Texas Revised Sub Account/5620001114
Not for Resale, 08/29/2012 23:50:47 MDT

8.2.5.3 Incomplete Joint Penetration. Incomplete joint penetration is a joint root condition in a groove weld in which weld metal does not extend through the joint thickness.

8.2.5.4 Incomplete Fusion. Incomplete fusion is a weld discontinuity in which fusion did not occur between weld metal and fusion faces or adjoining weld beads.

8.2.5.5 Porosity. Porosity is cavity-type discontinuities formed by gas entrapment during solidification. Pores may or may not be open to the surface.

8.2.5.6 Weld Profiles

(1) Surface irregularities and conditions of poor appearance include variations in weld bead width, nonuniformity of weld ripple, and excessive weld metal spatter;

(2) Unacceptable fillet weld profiles include conditions of insufficient fillet weld size, excessive convexity, excessive undercut, and overlap, as shown in Figure 29(C);

(3) Unacceptable groove weld profiles include conditions of excessive weld reinforcement, excessive undercut, and overlap, as shown in Figure 29(E);

(4) Machining or grinding direction shall be perpendicular to the length of Joint Class I welds.

8.2.5.7 Overlap. Overlap is the protrusion of weld metal beyond the weld toe or weld root.

8.2.6 Acceptance Standards for Weld Discontinuities. All welds conforming to Joint Class I through VI of this specification shall meet the acceptance criteria listed herein.

8.2.6.1 The faces of fillet welds may be slightly convex, flat, or slightly concave as shown in Figures 29(A) and 29(B), with none of the unacceptable profiles shown in Figure 29(C).

(1) Except at outside welds in corner joints, the convexity C of a weld or individual surface bead shall not exceed the values given in Figure 29.

(2) Except for undercut, as permitted by this standard, these profile requirements do not apply to the ends of intermittent fillet welds outside their effective length.

8.2.6.2 For Joint Class II through VI welded joints, groove welds shall preferably be made with slight or minimum face reinforcement, except as may be otherwise provided. In the case of butt and corner joints, the face reinforcement shall not exceed 1/8 in [3 mm] in height and shall have gradual transition to the plane of the base metal surface as shown in Figure 29(D). Welds shall be free of the discontinuities shown for butt joints as shown in Figure 29(E).

8.2.7 Definition of Dimensional Defects

8.2.7.1 Incorrect Joint Preparation. Joint preparation shall be inspected as follows:

(1) Incorrect joint preparation subject to visual inspection, generally before welding is started, includes out-of-tolerance welding bevel or groove dimensions, base metal misalignment, and undesirable weld joint fit-up conditions.

(2) Included in the requirements for weld joint preparation shall be inspection for removal of scale, paint, oil, etc., from the weld joint up to a maximum of 1 in [25 mm] on each side of the weld.

(3) Partial penetration weld joint preparations shall be visually inspected prior to welding to assure proper weld throat dimension.

8.2.7.2 Incorrect Weld Size. After welding, weld size shall be inspected as follows:

(1) Weld sizes shall be judged according to the limits of 8.2.8.2 and as shown in Figure 29.

(2) Fillet weld size should be determined by means of a fillet weld gage.

8.2.7.3 Incorrect Final Dimensions. Incorrect final dimensions subject to visual inspection include all conditions of dimensional inaccuracies, distortion, and lack of conformity to design requirements.

8.2.8 Acceptance Standards for Dimensional Defects

8.2.8.1 Incorrect Joint Preparation. Acceptance criteria for joint preparation shall be based upon the specific dimensional tolerances given in the design requirements and 4.3.3. In the absence of specific weld joint preparation tolerances, any condition of the joint preparation in the opinion of the Engineer which can reasonably be expected to produce unacceptable structural discontinuities shall be considered incorrect joint preparation and unacceptable.

8.2.8.2 Incorrect Weld Size. The average size of a given length weld shall not be less than the weld size specified on the drawing. The average weld size is determined by the average of measurements obtained at 3 in [75 mm] intervals along the weld length. Fillet weld sizes shall conform to the following tolerances based on a measurement of fused leg length:

(1) Weld sizes under 3/8 in [10 mm]:

–1/32 in [1 mm]
+1/8 in [3 mm]

Copyright American Welding Society
Provided by IHS under license with AWS
No reproduction or networking permitted without license from IHS
Licensee=University of Texas Revised Sub Account/5620001114
Not for Resale, 08/29/2012 23:50:47 MDT

(2) Weld sizes 3/8 in [10 mm], and over:

–1/16 in [2 mm]
+1/8 in [3 mm]

For welds under 3 in [75 mm] in length, the tolerances are applied directly. Underfill is unacceptable for groove welds in butt joints.

8.2.8.3 Incorrect Final Dimensions. The completed weldment shall provide and maintain dimensional conditions that meet appearance, machining, assembly, installation, and end use design requirements of the product.

8.2.9 Defect Removal and Repair. See Clause 9, Modification or Repair.

8.3 Radiographic Inspection

8.3.1 General. The procedures and standards set forth in this subclause are to govern radiographic inspection of welded joints when such inspection is required. The methodology shall conform to ASTM E 94, *Standard Guide for Radiographic Testing*, ASTM E 747, *Standard Practice for Design, Manufacture, and Material Grouping Classification of Wire Image Quality Indicators (IQI) Used for Radiology*, ASTM E 1025, *Standard Practice for Design, Manufacture, and Material Grouping Classification of Hole-Type Image Quality Indicators (IQI) Used for Radiology*, and ASTM E 1032, *Standard Test Method for Radiographic Examination of Weldments*.

8.3.2 Personnel qualifications and records shall conform to American Society for Nondestructive Testing, SNT-TC-1A, *Recommended Practice, Supplement A, Radiography.*

8.3.3 Extent of Inspection

8.3.3.1 Information furnished to the bidder shall identify the extent of radiographic inspection to be performed by identifying the joints to be radiographed and by designating whether complete or spot radiographs shall be made.

8.3.3.2 When complete radiographic inspection is specified, the entire length of weld in each designated joint shall be inspected in accordance with 8.3.4.1 through 8.3.4.7.

8.3.3.3 When spot radiography is specified, the inspection and selection of the spots shall be in accordance with 8.3.5.1 through 8.3.5.4.

8.3.3.4 Drawings with symbols in accordance with AWS A2.4, *Standard Symbols for Welding, Brazing, and Nondestructive Examination*, shall be used where practicable.

8.3.4 Radiographic Examination

8.3.4.1 For welded joints that are to be radiographed, the weld ripples or weld surface irregularities, inside and outside, shall be removed, where practical, by any suitable mechanical process to such a degree that the resulting radiographic contrast due to any irregularities cannot mask or be confused with the image of any indication.

8.3.4.2 The radiographic sensitivity shall be judged based on hole-type or wire Image Quality Indicators (IQI). (See ASTM E 1025 and ASTM E 747 for IQI design specifications.) Radiographic technique and equipment shall provide sufficient sensitivity to clearly delineate the required hole IQIs and the essential holes as described in 8.3.4.4, Table 14, ASTM E 1025 and Figures 30 through 33. Identifying numbers shall show clearly in the radiograph.

8.3.4.3 The total thickness of the steel between the IQI and the film shall be approximately equal to the average weld thickness measured through reinforcement and backing. To ensure this, steel shims shall be placed under the IQI. The shims shall extend 1/8 in [3 mm] beyond the three sides of the IQI.

8.3.4.4 To verify the radiographic technique employed, the following requirements shall be met:

(1) Hole-type or wire IQI shall clearly show on each radiograph. The minimum number and their required locations shall be:

(a) For welds joining nominally equal thicknesses—where a radiograph represents 10 in [250 mm] or greater, two IQI will be placed as shown in Figure 30. Where a radiograph represents less than 10 in [250 mm]; one IQI will be placed as shown in Figure 31.

(b) For welds at transition thickness—where a radiograph represents 10 in [250 mm] or greater of weld length, two IQI shall be placed on the thinner of the two sections and one IQI on the thicker section as shown in Figure 32. Figure 32 also permits an alternate IQI location.

When a radiograph does not show the outer edge of the weld area, an IQI shall be placed perpendicular to the joint with the smallest wire or hole on the outer edge of the area being radiographed.

(c) For circumferential welds—When single exposure radiographs are specified with the source being at the center of a curvature, three IQI equally spaced about the circumference are required.

(2) The thickness of a hole-type or wire IQI set and the essential hole or wire shall be as specified in Table 14

Copyright American Welding Society
Provided by IHS under license with AWS
No reproduction or networking permitted without license from IHS
Licensee=University of Texas Revised Sub Account/5620001114
Not for Resale, 08/29/2012 23:50:47 MDT

Table 14
Standard Hole-Type and Wire Image Quality Indicator Requirements

Nominal Single-Wall Material Thickness Range, in [mm]	Penetrameter					
	Source Side			Film Side		
	Hole Type Designation	Essential Hole	Wire Diameter, in [mm]	Hole Type Designation	Essential Hole	Wire Diameter in [mm]
≤0.25 [6]	12	2T	0.008 [0.20]	10	2T	0.006 [0.15]
>0.25 to 0.375[6 to 10]	15	2T	0.010 [0.25]	12	2T	0.008 [0.20]
>0.375 to ≤0.50 [10 to 13]	17	2T	0.013 [0.33]	15	2T	0.010 [0.25]
>0.50 to 0.75 [13 to 20]	20	2T	0.016 [0.41]	17	2T	0.013 [0.33]
>0.75 to 1.00 [20 to 25]	25	2T	0.020 [0.51]	20	2T	0.016 [0.41]
>1.00 to 1.50 [25 to 40]	30	2T	0.025 [0.64]	25	2T	0.020 [0.51]
>1.50 to 2.00 [40 to 50]	35	2T	0.032 [0.81]	30	2T	0.025 [0.64]
>2.00 to 2.50 [50 to 65]	40	2T	0.040 [1.02]	35	2T	0.032 [0.81]
>2.50 to 4.00 [65 to 100]	56	2T	0.050 [1.27]	40	2T	0.040 [1.02]
>4.00 to 6.00 [100 to 150]	60	2T	0.063 [1.60]	50	2T	0.050 [1.27]
>6.00 to 8.00 [150 to 200]	80	2T	0.100 [2.54]	60	2T	0.063 [1.60]
>8.00 to 10.00 [200 to 250]	100	2T	0.126 [3.20]	80	2T	0.100 [2.54]
>10.00 to 12.00 [250 to 300]	120	2T	0.160 [4.06]	100	2T	0.126 [3.20]
>12.00 to 16.00 [300 to 400]	160	2T	0.250 [6.35]	120	2T	0.160 [4.06]
>16.00 to 20.00 [400 to 500]	200	2T	0.320 [8.12]	160	2T	0.250 [6.35]

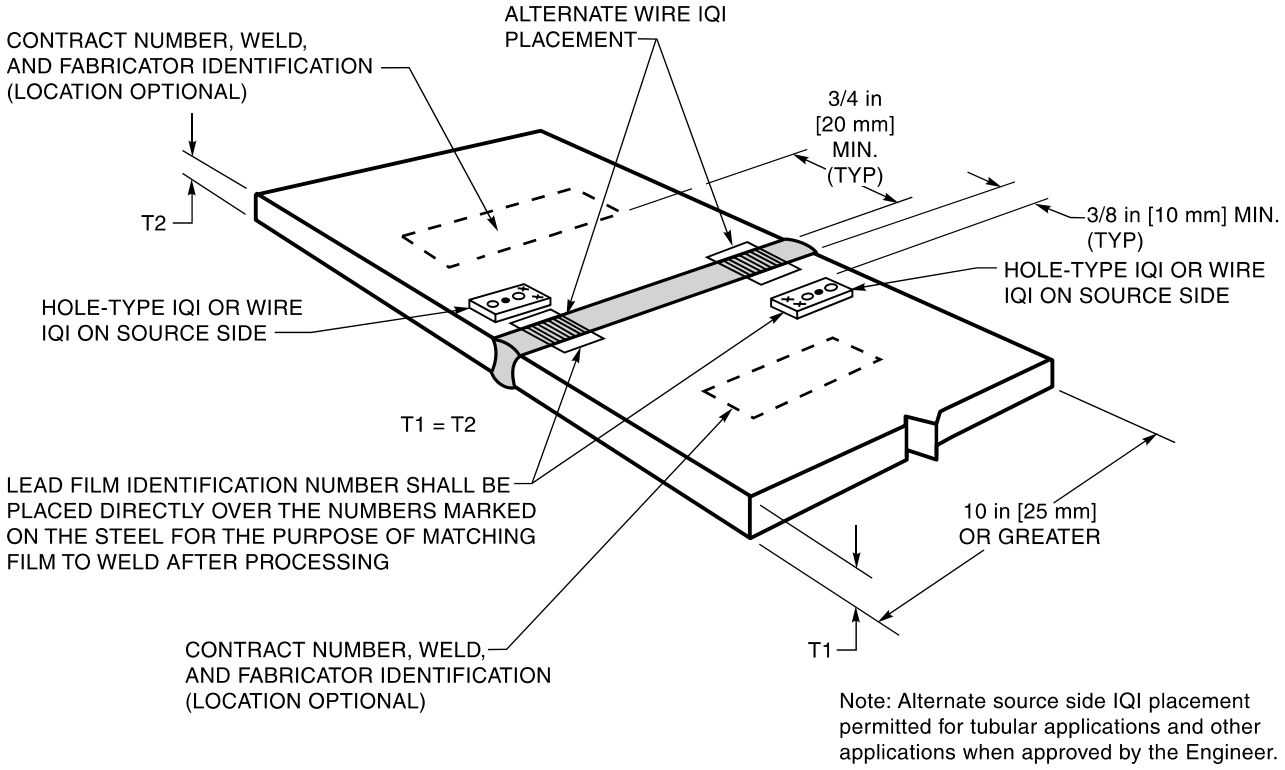

Figure 30—Radiographic Identification and Hole-Type or Wire IQI Locations on Approximately Equal Thickness Joints 10 in [250 mm] and Greater in Length

Copyright American Welding Society
Provided by IHS under license with AWS
No reproduction or networking permitted without license from IHS
Licensee=University of Texas Revised Sub Account/5620001114
Not for Resale, 08/29/2012 23:50:47 MDT

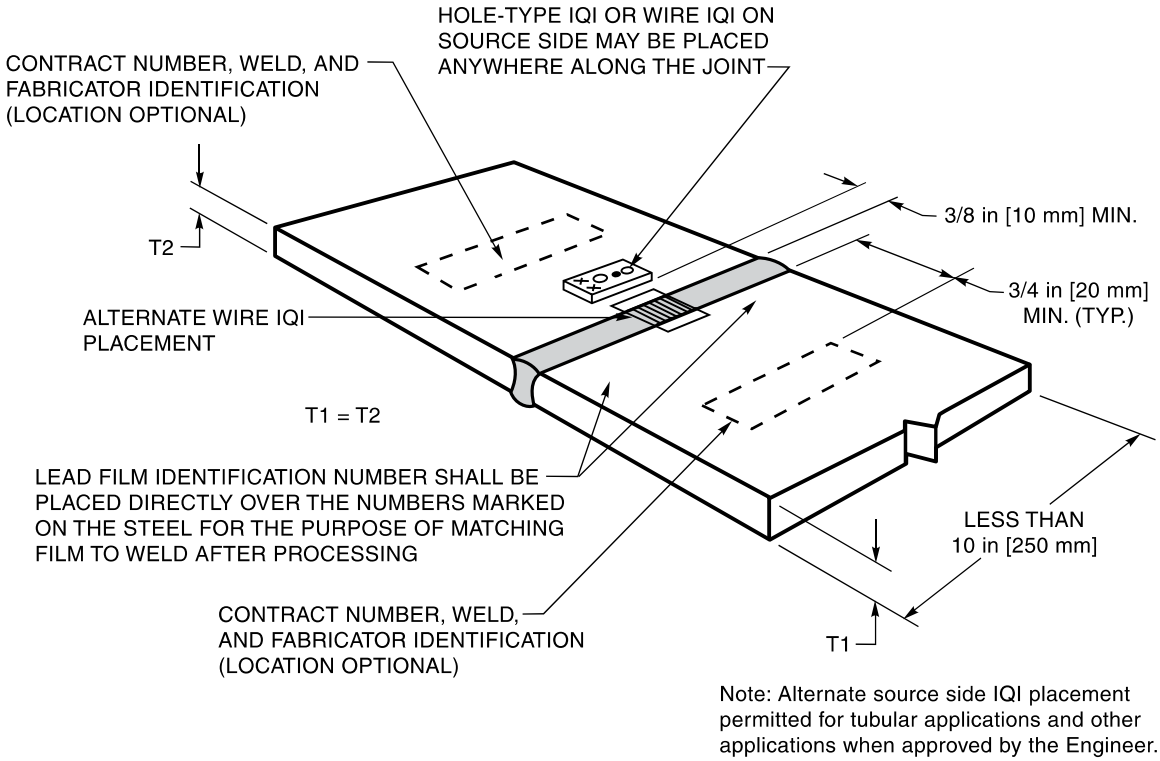

Figure 31—Radiographic Identification and Hole-Type or Wire IQI Locations on Approximately Equal Thickness Joints Less Than 10 in [250 mm] in Length

and ASTM E 747 (wire type) or ASTM E 1025 (hole type). When a smaller essential hole or wire, or a thinner hole or wire IQI is encountered than what is listed in Table 14, smaller wires may be selected by the Manufacturer, provided all other provisions for radiography are met.

Thickness may be measured as T1 or T2, or both, at the locations shown in Figures 30 through 33 and may be increased to provide for the thickness of allowable weld reinforcement, provided shims are used as specified in 8.3.4.3. Steel backing shall not be considered part of the weld or reinforcement in IQI selection.

(3) Hole-type IQI shall be manufactured from steel, preferably stainless steel, and shall conform to dimensions shown in ASTM E 1025, *Practice for Hole Type Image Quality Indicators Used for Radiography.* Each hole-type IQI shall be manufactured with three holes, one of which shall be of a diameter equal to twice the hole-type IQI thickness (2T). The diameter of the two remaining holes shall be selected by the Manufacturer. They will ordinarily be equal to one times (1T) and four times (4T) the hole-type IQI thickness. Hole-type IQI designations 10 through 25 shall contain a 4T hole.

(4) Wire image quality indicators (IQI) shall be manufactured in accordance with ASTM E 747.

8.3.4.5 All radiograph films shall be free from artifacts, chemical, or other processing defects that could interfere with proper interpretation.

8.3.4.6 Identification markers, whose images appear on the film, shall be placed adjacent to the weld on the part, not on the film; their locations shall be marked on the surface near the weld in such a manner that a defect appearing on a radiograph may be accurately located and that it is evident on the film that complete coverage of the weld has been obtained.

(1) The job identification and weld seam identification shall be indicated on each film.

(2) A complete set of radiographs for each job shall be retained by the Manufacturer and kept on file for a period of at least five years, or as required by contract.

Copyright American Welding Society
Provided by IHS under license with AWS
No reproduction or networking permitted without license from IHS
Licensee=University of Texas Revised Sub Account/5620001114
Not for Resale, 08/29/2012 23:50:47 MDT

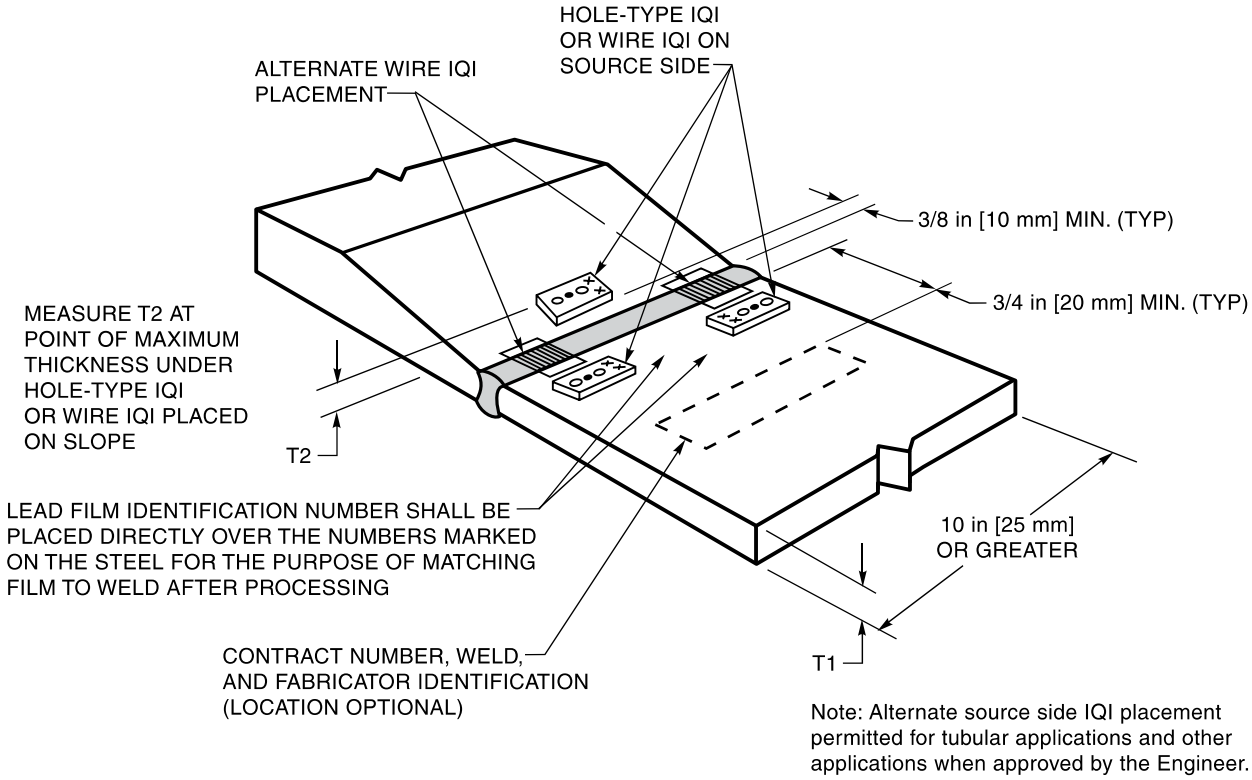

Figure 32—Radiographic Identification and Hole-Type or Wire IQI Locations on Transition Joints 10 in [250 mm] and Greater in Length

8.3.5 Spot Radiographic Examination of Welded Joints

8.3.5.1 Minimum extent of spot radiography[5] for welds not radiographed for their complete length shall be as follows:

(1) One spot shall be examined in the first 50 ft [15 m] of weld length and one spot shall be examined for each additional 50 ft [15 m] of weld length or fraction thereof. When identical welds are individually less than 50 ft [15 m] of weld length, 50 ft [15 m] increments of their total weld length may be represented by one spot examination.

(2) Such additional spots, as may be required, shall be selected so an examination of the welding of each welding operator or welder is made. Under conditions where two or more welders or welding operators make weld layers in a joint, or on the two sides of a double welded butt joint, one spot examination may represent the work of welders or welding operators.

(3) The spot locations and the elapsed time between welding and testing shall be agreed upon by the purchaser or the purchaser's designated representative and by the Fabricator.

8.3.5.2 Spot examination by radiography shall be made in conformance to 8.3.4.1 through 8.3.4.6. The minimum length of a spot radiograph shall be 6 in [150 mm]. The acceptability of welds examined by spot radiography shall be judged by the following standards:

(1) Welds in which the radiographs show any type of crack or zone of incomplete fusion or penetration shall be unacceptable.

(2) Welds in which the radiographs show inclusions or cavities shall be unacceptable if the length of any such

[5] Spot radiography, in accordance with these rules, will not ensure a predetermined quality level throughout the product fabricated. An accepted weld, according to these spot radiography rules, may still contain defects which might be disclosed on further examination.

Copyright American Welding Society
Provided by IHS under license with AWS
No reproduction or networking permitted without license from IHS
Licensee=University of Texas Revised Sub Account/5620001114
Not for Resale, 08/29/2012 23:50:47 MDT

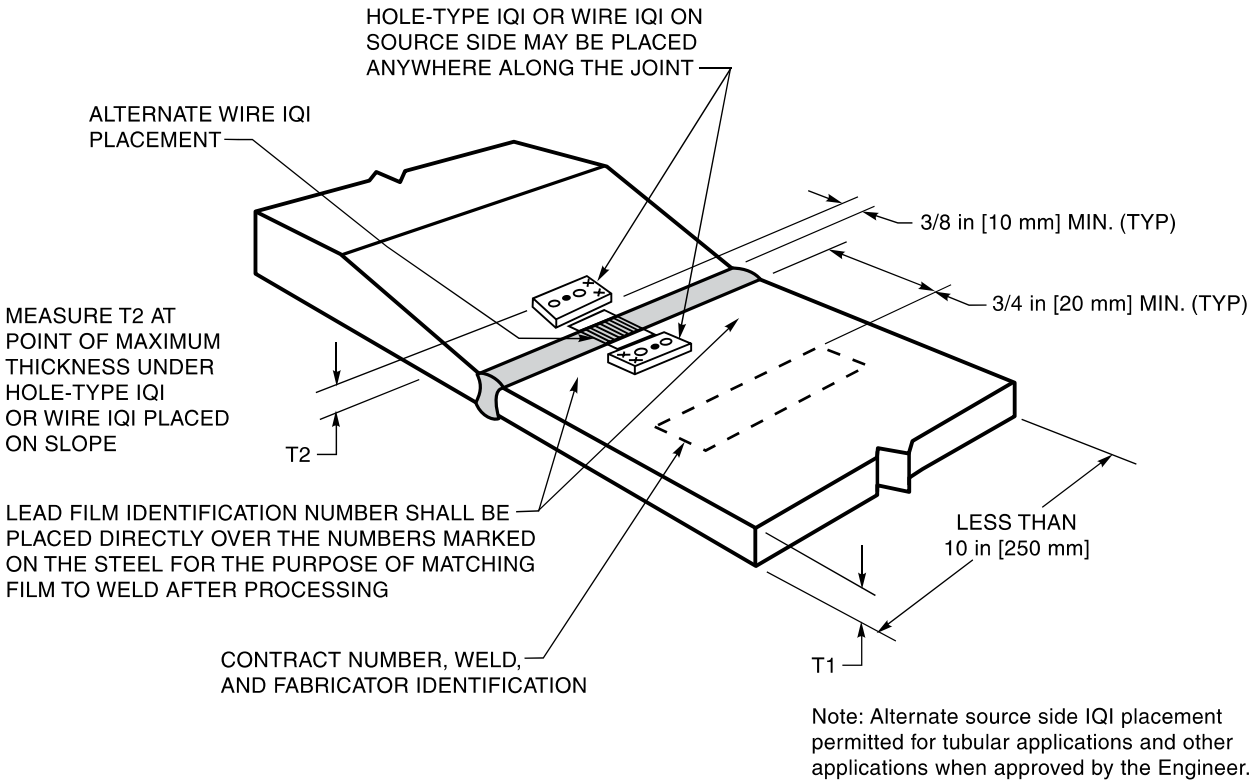

Figure 33—Radiographic Identification and Hole-Type or Wire IQI Locations on Transition Joints Less Than 10 in [250 mm] in Length

imperfection is greater than 2/3T where T is the thickness of the thinner plate welded. If several imperfections within these limitations exist in a line, the welds shall be judged acceptable if the sum of the longest dimensions of all such imperfections is not more than T in a length of 6T, and if the longest imperfections considered are separated by at least 3L of acceptable weld metal, where L is the longest imperfection. The maximum length of acceptable imperfection shall be 3/4 in [20 mm]. Any such imperfection shorter than 1/4 in [6 mm] shall be acceptable for any plate thickness.

8.3.5.3 Evaluation and Retests. Spot radiographs are evaluated as follows:

(1) Where spot radiography is acceptable, the entire weld length represented by the radiograph is acceptable.

(2) If a spot radiographed in accordance with these requirements discloses welding which does not comply with the minimum quality requirement of 8.3.6, two additional spots shall be taken adjacent to the original spot, one on each side.

(a) If the additional spots examined show that the welding meets the minimum quality requirements, the entire weld, represented by the three radiographs is acceptable. The defective weld found in the first radiograph shall be repaired and radiographically reinspected.

(b) If either of the two additional spots examined shows welding which does not comply with the minimum quality requirements of 8.3.6, the entire length of weld represented shall be rejected. The entire rejected weld shall be removed, and the joint shall be rewelded or, at the Fabricator's option, the entire length of weld shall be completely radiographed and only the defective welding corrected.

8.3.6 Acceptance Standards for Radiographically Determined Indications in Welds

8.3.6.1 Unacceptable Defects. Sections of the weld shown by radiography to have any of the following types of defects are unacceptable unless the defects are removed, the weld is repaired, and the repaired weld is reexamined in conformance to this subclause.

Copyright American Welding Society
Provided by IHS under license with AWS
No reproduction or networking permitted without license from IHS
Licensee=University of Texas Revised Sub Account/5620001114
Not for Resale, 08/29/2012 23:50:47 MDT

(1) Any type of crack or zone of incomplete fusion or penetration; or

(2) Any elongated inclusion, such as slag, which has a length greater than:

(a) 1/4 in [6 mm] for t up to 3/4 in [20 mm], inclusive;

(b) 1/3t for t from 3/4 to 2 1/4 in [20 to 60 mm], inclusive;

(c) 3/4 in [20 mm] for t over 2 1/4 in [60 mm]; or

(3) Any group of inclusions in line that has an aggregate length greater than t in a length of 12t, except when the distance between the successive imperfections exceeds 6L, where L is the length of the longest imperfection in the group; or

(4) Rounded indications in excess of that specified by the acceptance criteria shown in 8.3.6.3.

8.3.6.2 Rounded Indications. Rounded indications are evaluated as follows:

(1) Rounded Indications. Indications with a maximum length of three times the width or less on the radiograph are defined as rounded indications. These indications may be circular, elliptical, conical, or irregular in shape and may have tails. When evaluating the size of an indication, the tail shall be included. The indication may be from any source in the weld, such as porosity, slag, or tungsten.

(2) Aligned Indications. A sequence of four or more rounded indications shall be considered to be aligned when they touch a line parallel to the length of the weld drawn through the center of the two outer rounded indications.

(3) Thickness t. The thickness of the weld is t, excluding any allowable reinforcement. For a butt joint weld joining two members having different thicknesses at the weld, t is the thinner of these two thicknesses. If a full penetration weld includes a reinforcing fillet weld, the thickness of the throat of the fillet shall be included in t.

8.3.6.3 Acceptance Criteria for Rounded Indications

(1) Density within the image of the indication may vary and is not a criterion for acceptance or rejection.

(2) Only those rounded indications (see Table 15) which exceed the following dimensions shall be considered relevant.

(a) 1/10t for t less than 1/8 in [3 mm];

(b) 1/64 in [0.4 mm] for t 1/8 in to 1/4 in [3 mm to 6 mm], inclusive;

(c) 1/32 in [0.8 mm] for t greater than 1/4 in to 2 in [6 mm to 50 mm], inclusive;

(d) 1/16 in [2 mm] for t greater than 2 in [50 mm].

Table 15
Examples of Acceptable Indications

Thickness (T), in [mm]	Maximum Size of Acceptable Rounded Indications, in [mm]		Maximum Size of Nonrelevant Indications, in [mm]
	Random	Isolated	
<1/8 [3]	1/4T	1/3T	1/10T
≥1/8 [3] to <3/16 [5]	0.031 [0.79]	0.042 [1.07]	0.015 [0.38]
≥3/16 [5] to <1/4 [6]	0.047 [1.19]	0.063 [1.60]	0.015 [0.38]
≥1/4 [6] to <5/16 [8]	0.063 [1.60]	0.083 [2.11]	0.015 [0.38]
≥5/16 [8] to <3/8 [10]	0.078 [1.98]	0.104 [2.64]	0.031 [0.79]
≥3/8 [10] to <7/16 [11]	0.091 [2.31]	0.125 [3.18]	0.031 [0.79]
≥7/16 [11] to <1/2 [13]	0.109 [2.77]	0.146 [3.71]	0.031 [0.79]
≥1/2 [13] to <9/16 [14]	0.125 [3.18]	0.168 [4.27]	0.031 [0.79]
≥9/16 [14] to <5/8 [16]	0.142 [3.61]	0.188 [4.78]	0.031 [0.79]
≥5/8 [16] to <11/16 [18]	0.156 [3.96]	0.210 [5.33]	0.031 [0.79]
≥11/16 [18] to <3/4 [20]	0.156 [3.96]	0.230 [5.84]	0.031 [0.79]
≥3/4 [20] to ≤2 [50]	0.156 [3.96]	0.250 [6.35]	0.031 [0.79]
>2 [50]	0.156 [3.96]	0.375 [9.53]	0.063 [1.60]

Copyright American Welding Society
Provided by IHS under license with AWS
No reproduction or networking permitted without license from IHS
Licensee=University of Texas Revised Sub Account/5620001114
Not for Resale, 08/29/2012 23:50:47 MDT

(3) The maximum permissible size of any indication (see Table 15) shall be 1/4 t, or 5/32 in [4 mm], whichever is smaller, except that an isolated indication separated from an adjacent indication by 1 in [25 mm] or more, may be 1/3 t, or 1/4 in [6 mm], whichever is less. For t greater than 2 in [50 mm], the maximum permissible size of an isolated indication shall be increased to 3/8 in [10 mm].

(4) Aligned rounded indications are acceptable when the summation of the diameters of the indications is less than t in a length of 12t (see Figure 34). The length of groups of aligned groups shall meet the requirements of Figure 35.

(5) The distance between adjacent rounded indications is not a factor in determining acceptance or rejection, except as required for isolated indications or groups of aligned indications.

(6) The rounded indications as determined from the radiographic film shall not exceed that shown in the charts.

The charts in Figures 36 through Figure 41 illustrate various types of assorted, randomly dispersed, and clustered rounded indications for different weld thicknesses greater than 1/8 in [3 mm]. These charts represent the maximum acceptable concentration limits for rounded indications (ASTM E 390, *Standard Reference Radiographs for Steel Fusion Welds*, may be used in lieu of these figures).

The chart for each thickness range represents full scale 6 in [150 mm] radiographs, and shall not be enlarged or reduced. The distributions shown are not necessarily the patterns that may appear on the radiographs, but are typical of the concentration and size of indications permitted.

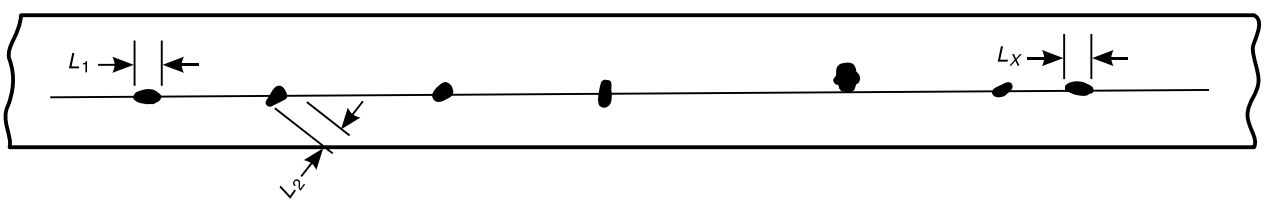

Note: Sum of L_1 through L_X shall be less than t in a length of 12t.

Adapted from ASME *Boiler and Pressure Vessel Code*, 2004 Section VIII, Division 1, Appendix 4, Figure 4-1 with permission from ASME.

Figure 34—Aligned Rounded Indications

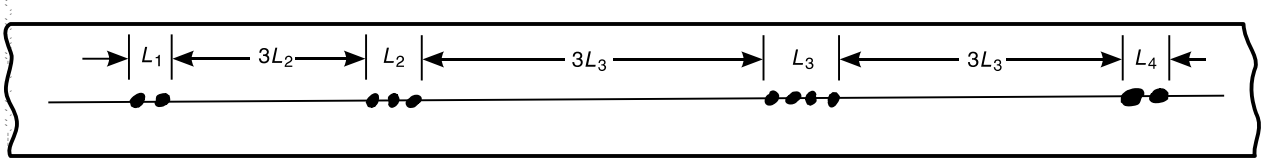

Note: Sum of the group lengths shall be less than t in a length of 12t.

MAXIMUM GROUP LENGTH	MINIMUM SPACING BETWEEN GROUPS
L = 1/4 in [6 mm] for t < 3/4 in [20 mm] L = 1/3t for 3/4 in [20 mm] ≤ t ≤ 2-1/4 in [57 mm] L = 3/4 in [20 mm] for t > 2-1/4 in [57 mm]	3L where L is the length of the longest adjacent group being evaluated.

Adapted from ASME *Boiler and Pressure Vessel Code*, 2004 Section VIII, Division 1, Appendix 4, Figure 4-2 with permission from ASME.

Figure 35—Groups of Aligned Rounded Indications

Copyright American Welding Society
Provided by IHS under license with AWS
No reproduction or networking permitted without license from IHS
Licensee=University of Texas Revised Sub Account/5620001114
Not for Resale, 08/29/2012 23:50:47 MDT

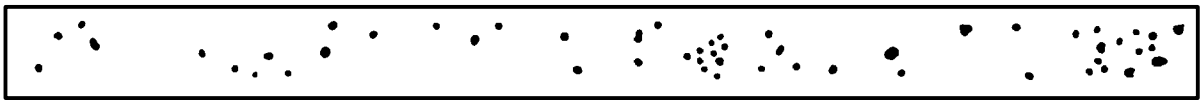

(A) RANDOM ROUNDED INDICATIONS

TYPICAL CONCENTRATION AND SIZE PERMITTED IN ANY 6 in [150 mm] LENGTH OF WELD

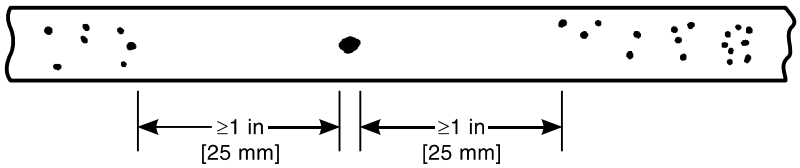

(B) ISOLATED INDICATION

MAXIMUM SIZE OF INDICATION PER TABLE 15 AND 8.3.6.3(3)

(C) CLUSTER

Adapted from ASME *Boiler and Pressure Vessel Code*, 2004 Section VIII, Division 1, Appendix 4, Figure 4-3 with permission from ASME.

Figure 36—Charts for Thickness t Equal to 1/8 in to 1/4 in [3 mm to 6 mm], Inclusive

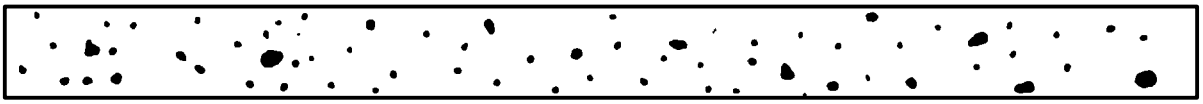

(A) RANDOM ROUNDED INDICATIONS

TYPICAL CONCENTRATION AND SIZE PERMITTED IN ANY 6 in [150 mm] LENGTH OF WELD

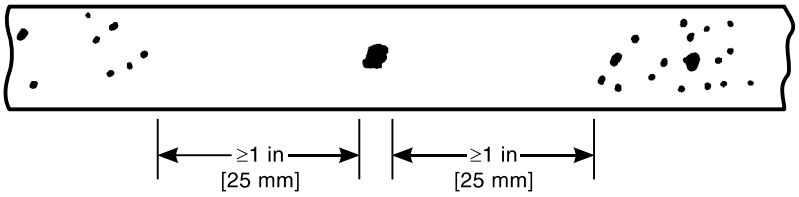

(B) ISOLATED INDICATION

MAXIMUM SIZE OF INDICATION PER TABLE 15 AND 8.3.6.3(3)

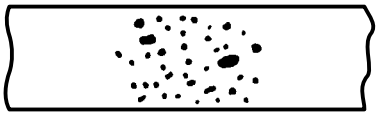

(C) CLUSTER

Adapted from ASME *Boiler and Pressure Vessel Code*, 2004 Section VIII, Division 1, Appendix 4, Figure 4-4 with permission from ASME.

Figure 37—Charts for Thickness t Over 1/4 in to 3/8 in [6 mm to 10 mm], Inclusive

Copyright American Welding Society
Provided by IHS under license with AWS
No reproduction or networking permitted without license from IHS

Licensee=University of Texas Revised Sub Account/5620001114
Not for Resale, 08/29/2012 23:50:47 MDT

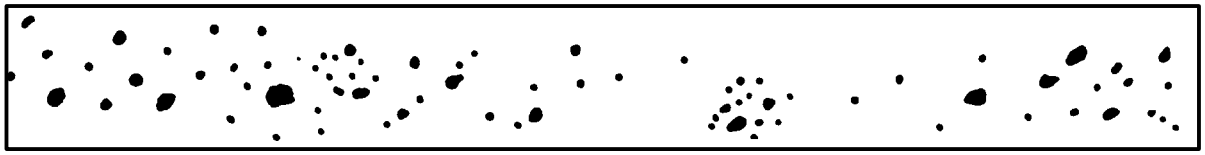

(A) RANDOM ROUNDED INDICATIONS

TYPICAL CONCENTRATION AND SIZE PERMITTED IN ANY 6 in [150 mm] LENGTH OF WELD

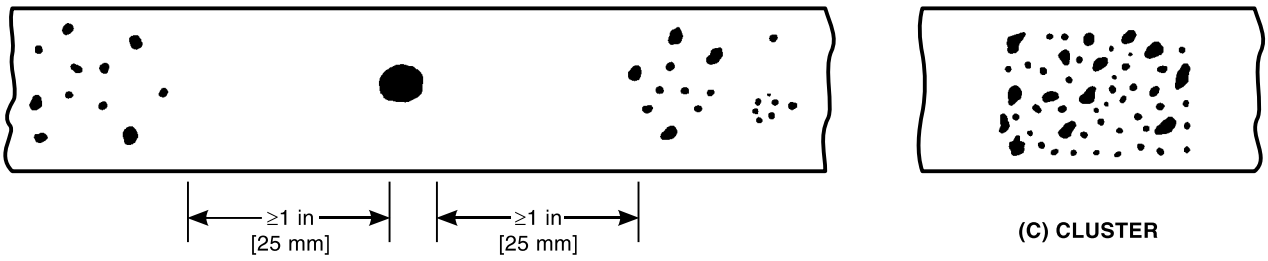

(B) ISOLATED INDICATION

MAXIMUM SIZE OF INDICATION PER TABLE 15 AND 8.3.6.3(3)

(C) CLUSTER

Adapted from ASME *Boiler and Pressure Vessel Code*, 2004 Section VIII, Division 1, Appendix 4, Figure 4-5 with permission from ASME.

Figure 38—Charts for Thickness t Over 3/8 in to 3/4 in [10 mm to 20 mm], Inclusive

(7) Weld Thickness t Less Than 1/8 in [3 mm]. For t less than 1/8 in [3 mm], the maximum number of rounded indications shall not exceed 12 in a weld 6 in [150 mm] in length. A proportionally fewer number of indications shall be permitted in welds less than 6 in [150 mm] in length.

(8) The illustrations for clustered indications show up to four times as many indications in a local area as that shown in the illustrations for random indications.

The length of an acceptable cluster shall not exceed the lesser of 1 in [25 mm] or 2t. Where more than one cluster is present, the sum of the lengths of the clusters shall not exceed 1 in [25 mm] in a 6 in [150 mm] length of weld.

8.3.7 Defect Removal and Repair. See Clause 9, Modification or Repair.

8.4 Ultrasonic Inspection

8.4.1 General. Ultrasonic inspection of welded joints, where required, shall be conducted in conformance with the procedures specified herein, which include standards for acceptance, or in conformance to ASME Section VIII, Division 1, Appendix 12 or Division 2, Article 9-3.

8.4.2 This procedure contains the minimum requirements for the ultrasonic inspection of butt, corner, and T-type welded joints by the contact method and is applicable to welds in carbon and low-alloy steels.

8.4.3 Criteria are given in Table 1 for ultrasonic inspection of two weld joint classes: Joint Class I for complete inspection of the weld where joint performance is equivalent to the base metal under all conditions; and Joint Class II for welds when 10% of the length of the weld is inspected after magnetic particle or liquid penetrant inspection has been performed.

8.4.4 Extent of Inspection

8.4.4.1 Contractual specifications shall designate the extent of ultrasonic inspection to be performed by identifying the welded joints to be inspected as Joint Class I or Joint Class II.

8.4.4.2 When Joint Class I welds are designated, the entire length of the weld shall be inspected.

Copyright American Welding Society
Provided by IHS under license with AWS
No reproduction or networking permitted without license from IHS

Licensee=University of Texas Revised Sub Account/5620001114
Not for Resale, 08/29/2012 23:50:47 MDT

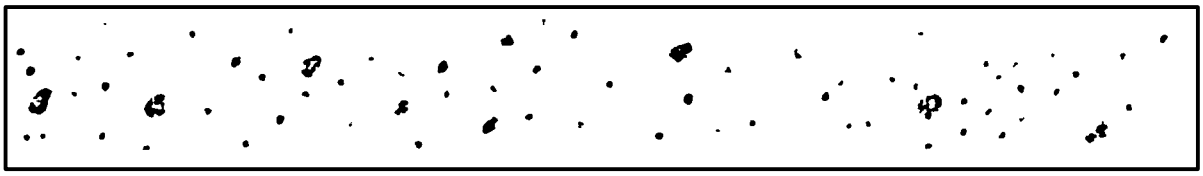

(A) RANDOM ROUNDED INDICATIONS

TYPICAL CONCENTRATION AND SIZE PERMITTED IN ANY 6 in [150 mm] LENGTH OF WELD

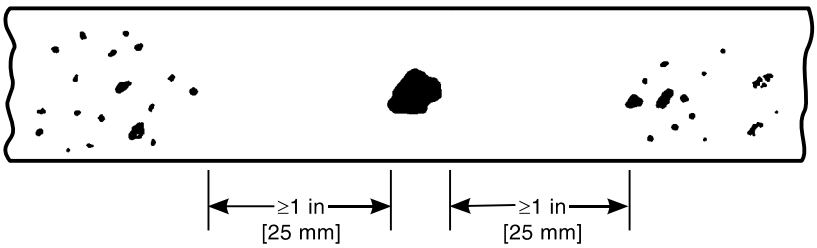

(B) ISOLATED INDICATION

MAXIMUM SIZE OF INDICATION PER TABLE 15 AND 8.3.6.3(3)

(C) CLUSTER

Adapted from ASME *Boiler and Pressure Vessel Code*, 2004 Section VIII, Division 1, Appendix 4, Figure 4-6 with permission from ASME.

Figure 39—Charts for Thickness t Over 3/4 in to 2 in [20 mm to 50 mm], Inclusive

8.4.4.3 When Joint Class II welds are specified, the location inspected shall be a 6 in [150 mm] length of weld. The number of locations shall represent 10% of the total length of the weld. When an inspected location requires repair, two adjacent locations, one on each side, shall be inspected also. If defects requiring repair are shown in either of these locations, the entire weld in that joint shall be inspected.

8.4.4.4 Information furnished to the bidder shall identify the extent of ultrasonic inspection to be performed. Drawings with symbols shall be in conformance with AWS A2.4, *Standard Symbols for Welding, Brazing, and Nondestructive Examination*.

8.4.5 Requirements

8.4.5.1 Personnel Qualifications. The ultrasonic examiner shall be thoroughly familiar with the calibration and operation of the equipment used and the inspection requirements of this specification. The examiner shall have demonstrated ability to calibrate and operate the equipment in conformance to this procedure. Personnel qualifications and records shall conform to American Society for Nondestructive Testing SNT-TC-1A, *Recommended Practice, Supplement C, Ultrasonic Testing Method*.

8.4.5.2 Equipment. The ultrasonic inspection equipment shall consist of the inspection instrument with scan data presentation, and sweep length, calibrated sensitivity, and time-corrected gain controls. The search unit and accessories shall have the following capabilities:

(1) Search Unit. The maximum dimension of the transducer active element shall not exceed 1 in [25 mm]. The shear wave transducer shall be fitted with a plastic wedge designed to induce shear waves into the material to be tested at an angle of 45°, 60°, or 70° within a maximum tolerance of ±3°.

(2) Calibration Standards. Calibration standards are shown in Figures 42 through 44. Calibration reference standards shall be made from material acoustically similar to the material to be tested. Standards such as IIW or ASTM may be used, provided the reference level

Copyright American Welding Society
Provided by IHS under license with AWS
No reproduction or networking permitted without license from IHS
Licensee=University of Texas Revised Sub Account/5620001114
Not for Resale, 08/29/2012 23:50:47 MDT

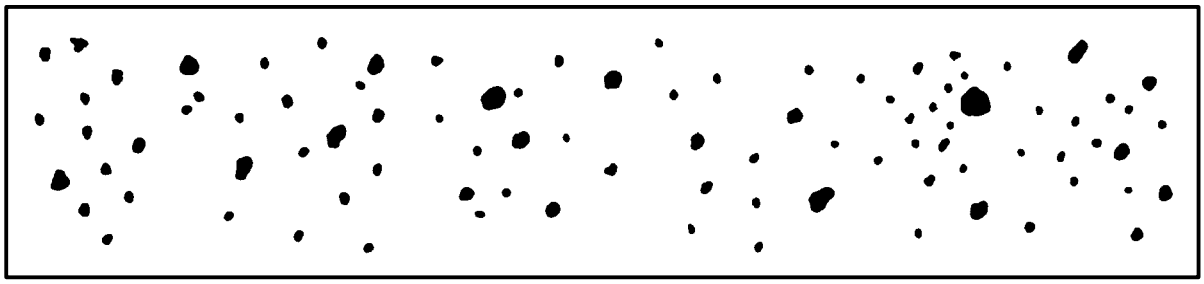

(A) RANDOM ROUNDED INDICATIONS

TYPICAL CONCENTRATION AND SIZE PERMITTED IN ANY 6 in [150 mm] LENGTH OF WELD

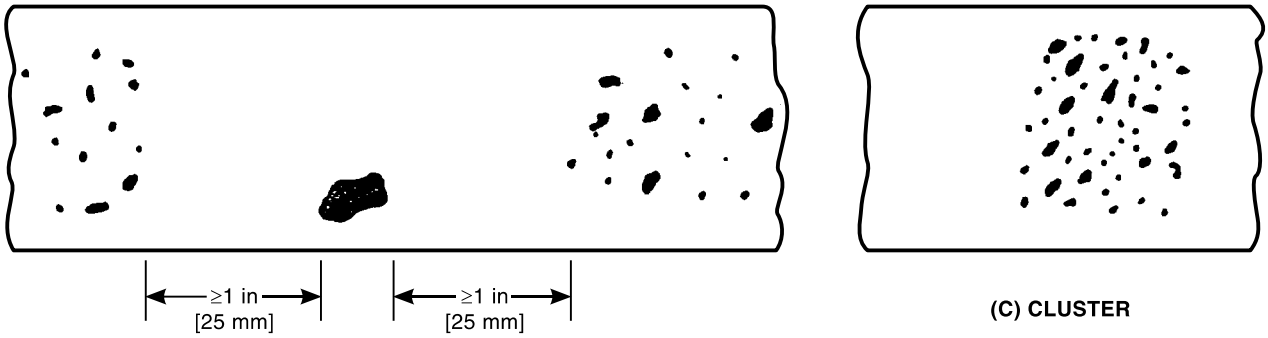

(B) ISOLATED INDICATION

(C) CLUSTER

MAXIMUM SIZE OF INDICATION PER TABLE 15 AND 8.3.6.3(3)

Adapted from ASME *Boiler and Pressure Vessel Code*, 2004 Section VIII, Division 1, Appendix 4, Figure 4-7 with permission from ASME.

Figure 40—Charts for Thickness t Over 2 in to 4 in [50 mm to 100 mm], Inclusive

sensitivity for equipment calibration is adjusted to be the equivalent to that achieved by the reference standard.

The following is a brief description of the calibration blocks:

(a) The 3/64 in [1.2 mm] diameter holes are used in setting the test sensitivity level.

(b) The 1/8 in [3 mm] diameter holes are used to check the accuracy of the refracted angle produced by the plastic wedge.

(c) The diagonal lines mark the positions of the transducer to detect the 3/64 in [1.2 mm] diameter holes.

(d) The 3/4 in [20 mm] vertical lines mark the positions of the transducer when calibrating for depth.

(e) The 1/4 in [6 mm] vertical lines are used for measuring distance from the search unit to the hole.

(f) The angle check area marks the position of the transducer when checking the accuracy of the refracted angle produced by the plastic wedge.

8.4.5.3 Equipment Calibration. Ultrasonic equipment shall be calibrated in accordance with the following requirements:

(1) Search unit angles shall be selected as follows:

Copyright American Welding Society
Provided by IHS under license with AWS
No reproduction or networking permitted without license from IHS
Licensee=University of Texas Revised Sub Account/5620001114
Not for Resale, 08/29/2012 23:50:47 MDT

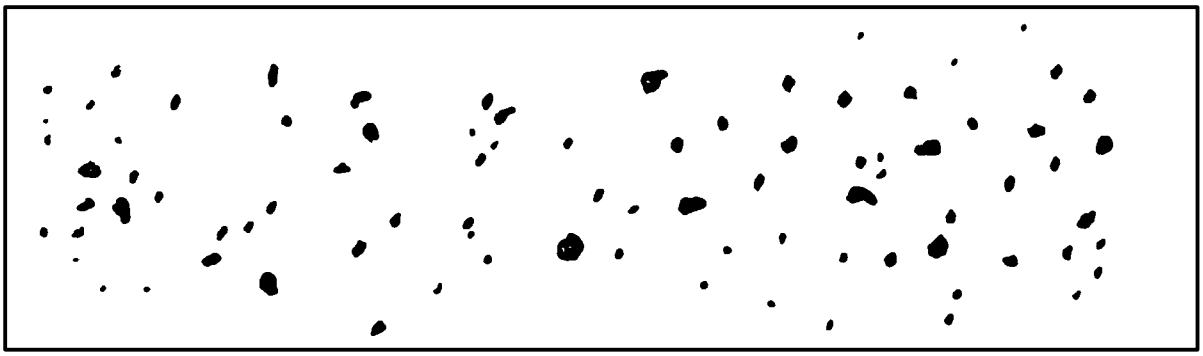

(A) RANDOM ROUNDED INDICATIONS

TYPICAL CONCENTRATION AND SIZE PERMITTED IN ANY 6 in [150 mm] LENGTH OF WELD

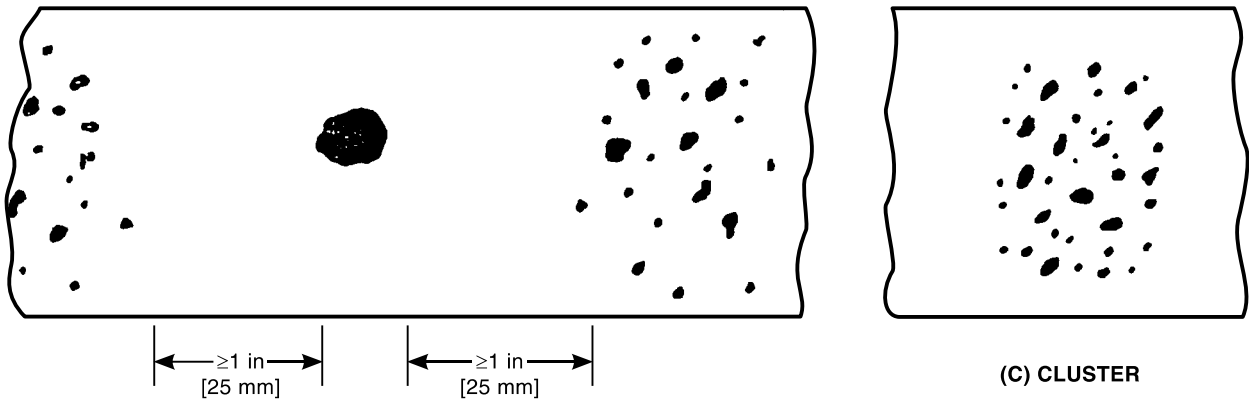

(B) ISOLATED INDICATION

(C) CLUSTER

MAXIMUM SIZE OF INDICATION PER TABLE 15 AND 8.3.6.3(3).

Adapted from ASME *Boiler and Pressure Vessel Code*, 2004 Section VIII, Division 1, Appendix 4, Figure 4-8 with permission from ASME.

Figure 41—Charts for Thickness t Over 4 in [100 mm]

(a) For plate thicknesses 1/2 in [13 mm] to, but not including, 1-1/2 in [40 mm], a wedge angle producing a 60° or 70° shear wave in the material to be tested shall be used.

(b) For plate thicknesses 1-1/2 in [40 mm] to, but not including, 2-1/2 in [65 mm], a wedge angle producing a 45° or 60° shear wave in the material to be tested shall be used.

(c) For plate thicknesses 2-1/2 in [65 mm] and over, a wedge angle producing a 45° shear wave in the material to be tested shall be used.

(2) Angle Check. With the transducer positioned for maximum signal response from the 1/8 in [3 mm] diameter hole in the calibration block, the sound emission point of the transducer shall fall on or between the two lines in the angle check area.

(3) Flaw-Locating Device Adjustment (if used). With the sound emission point of the transducer aligned with the 3/4 in [20 mm] vertical line on the calibration block representing the thickness of the weld, the flaw locating device is adjusted so that the line on the rule representing the weld thickness is in alignment with the corresponding 1/4 in [6 mm] line on the calibration block.

Copyright American Welding Society
Provided by IHS under license with AWS
No reproduction or networking permitted without license from IHS
Licensee=University of Texas Revised Sub Account/5620001114
Not for Resale, 08/29/2012 23:50:47 MDT

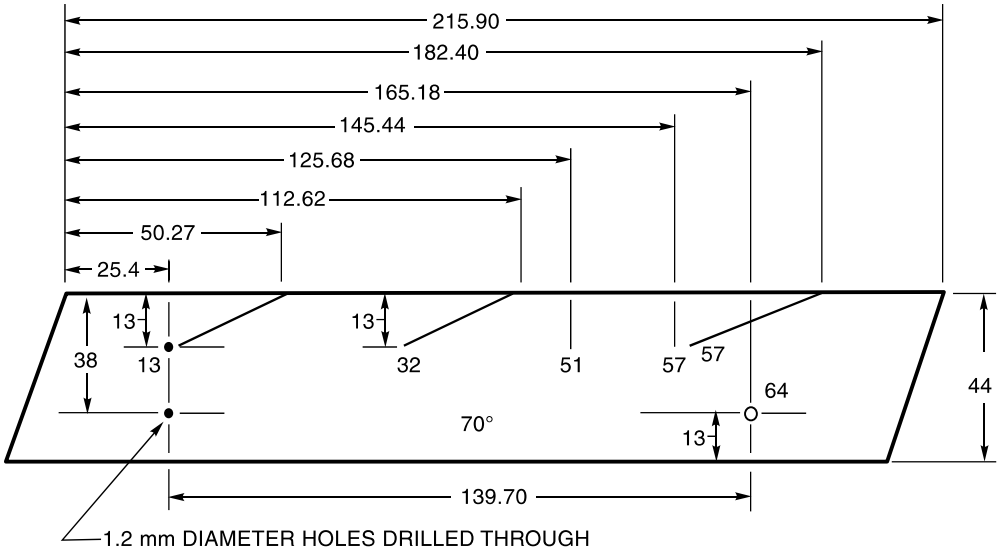

FRONT

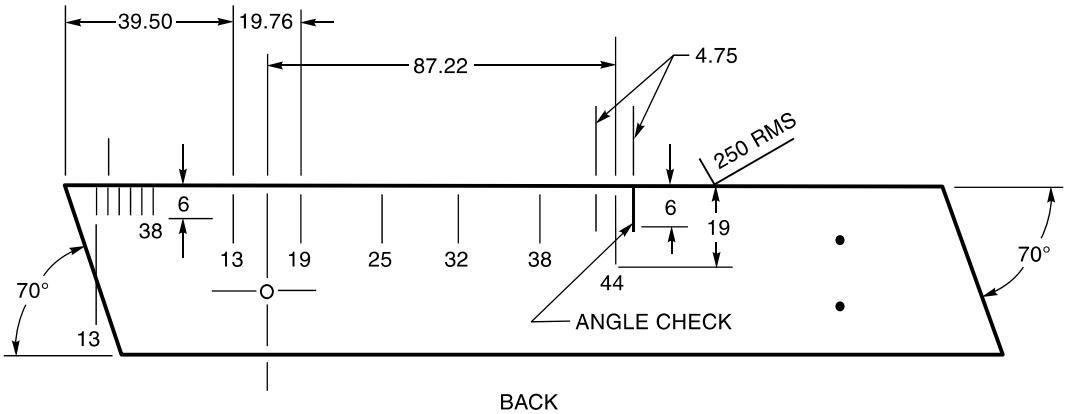

BACK

mm	in	mm	in	mm	in	mm	in
1.2	3/64	19	3/4	39.50	1.555	112.62	4.434
2.31	0.091	19.76	0.778	44	1-3/4	125.68	4.948
4.62	0.182	25	1	51	2	139.70	5.500
4.75	0.187	25.4	1.000	57	2-1/4	145.44	5.726
6	1/4	32	1-1/4	60.27	2.373	165.18	6.503
13	1/2	38	1-1/2	64	2-1/2	182.40	7.181
				87.22	3.434	215.90	8.500

Notes:
1. Material is the same as the material being tested.
2. Thickness = 1-1/4 in [32 mm].

All dimensions in millimeters except angles.

Figure 42—70° Calibration Standard

Copyright American Welding Society
Provided by IHS under license with AWS
No reproduction or networking permitted without license from IHS
Licensee=University of Texas Revised Sub Account/5620001114
Not for Resale, 08/29/2012 23:50:47 MDT

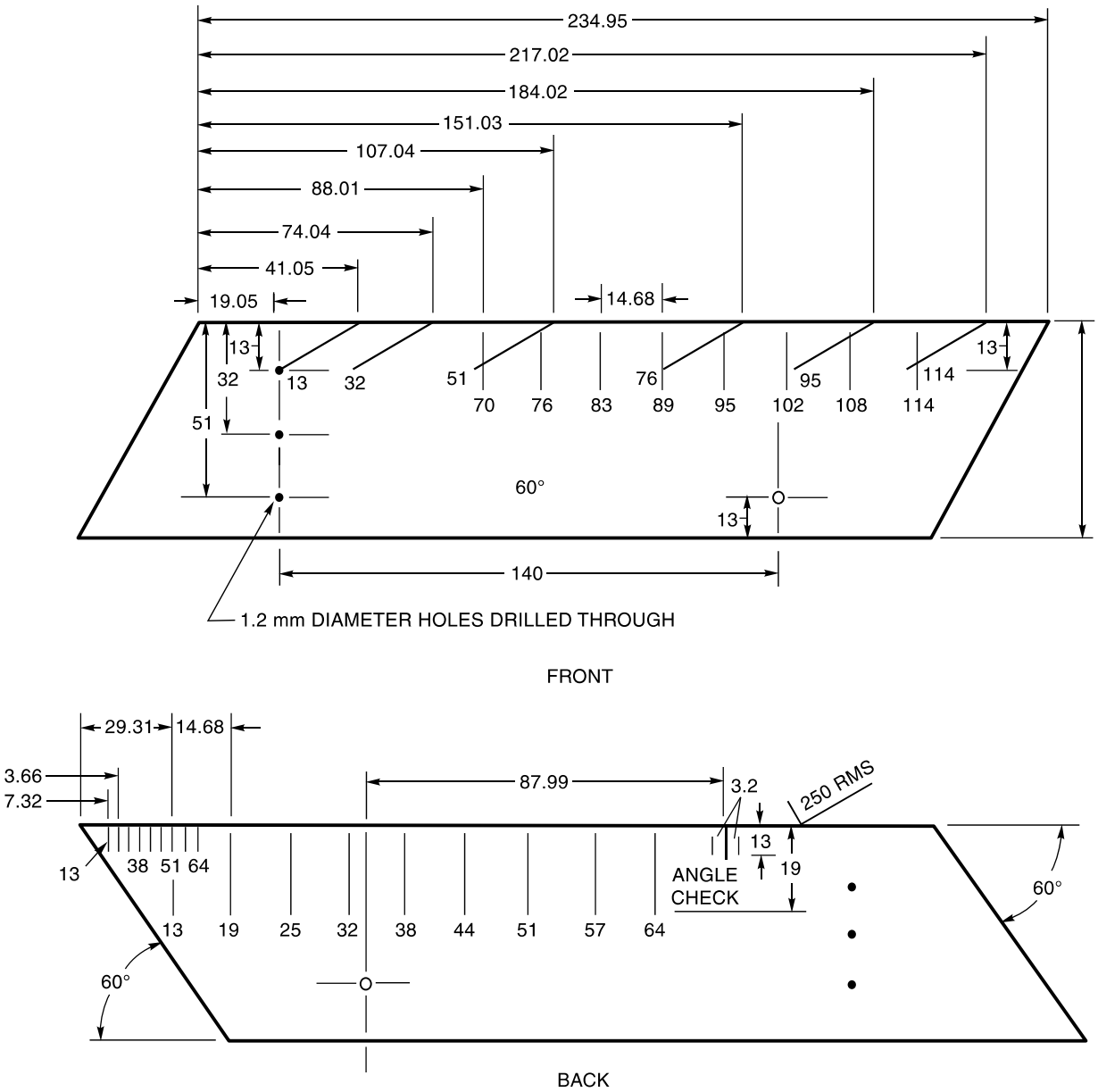

mm	in	mm	in	mm	in	mm	in
1.2	3/64	25	1	70	2-3/4	107.4	4.214
3.2	0.125	29.31	1.154	74.04	2.915	108	4-1/4
3.66	0.144	32	1-1/4	76	3	114	4-1/2
6	1/4	38	1-1/2	83	3-1/4	140	5-1/2
7.32	0.288	41.05	1.616	87.99	3.464	151.03	5.946
13	1/2	44	1-3/4	88.01	3.465	184.02	7.245
14.68	0.578	51	2	89	3-1/2	217.02	8.544
19	3/4	57	2-1/4	95	3-3/4	234.95	9.250
19.05	0.750	64	2-1/2	102	4		

Notes: All dimensions in millimeters except angles.

1. Material is the same as the material being tested.
2. Thickness = 1-1/4 in [32 mm].

Figure 43—60° Calibration Standard

Copyright American Welding Society
Provided by IHS under license with AWS
No reproduction or networking permitted without license from IHS
Licensee=University of Texas Revised Sub Account/5620001114
Not for Resale, 08/29/2012 23:50:47 MDT

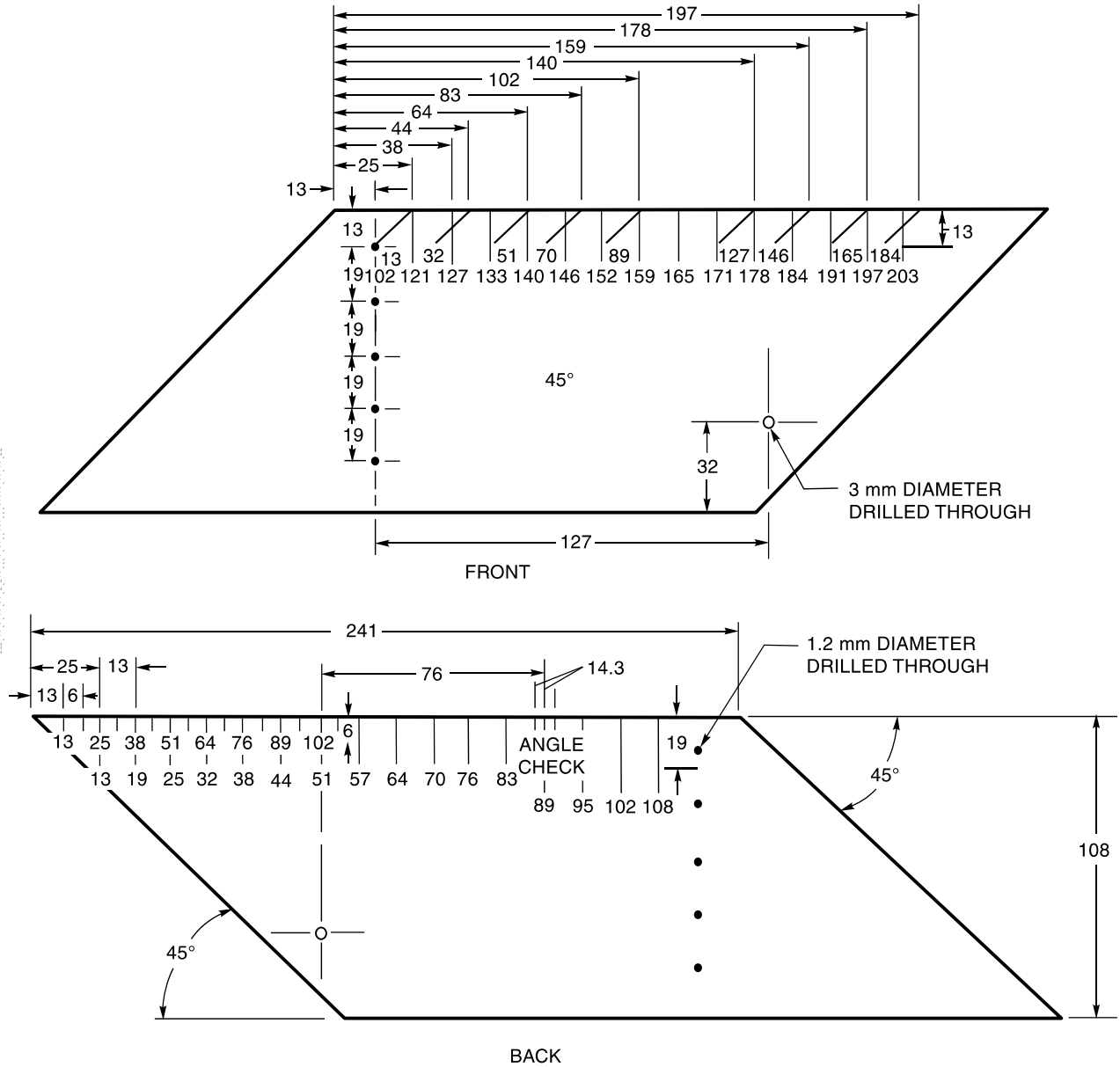

mm	in	mm	in	mm	in	mm	in
1.2	3/64	38	1-1/2	95	3-3/4	152	6
1.57	0.062	44	1-3/4	102	4	159	6-1/4
3	1/8	51	2	108	4-1/4	165	6-1/2
6	1/4	57	2-1/4	114	4-1/2	171	6-3/4
13	1/2	64	2-1/2	121	4-3/4	178	7
14.27	0.562	70	2-3/4	127	5	184	7-1/4
19	3/4	76	3	133	5-1/4	191	7-1/2
25	1	83	3-1/4	140	5-1/2	203	8
32	1-1/4	89	3-1/2	146	5-3/4	241	9-1/2

Notes: All dimensions in millimeters except angles.

1. Material is the same as the material being tested.
2. Thickness = 1-1/4 in [32 mm].

Figure 44—45° Calibration Standard

Copyright American Welding Society
Provided by IHS under license with AWS
No reproduction or networking permitted without license from IHS
Licensee=University of Texas Revised Sub Account/5620001114
Not for Resale, 08/29/2012 23:50:47 MDT

(4) Depth Calibration. The instrument is calibrated for the range of depth to be inspected using the large signal from the end of the block. When the emission point marked on the transducer is aligned with one of the 3/4 in [20 mm] vertical lines on the calibration standard, the signal will appear on the screen at the depth for which that line is marked. A "B" (for bottom) is marked on the screen at the depth equal to the weld thickness and a "T" (for top) is placed on the screen at the depth equal to twice the weld thickness. See Figure 45 for typical screen calibration.

(5) Test Sensitivity Calibration

(a) For Joint Class I welds, the instrument gain and attenuation correction controls shall be adjusted to peak all signals from the 3/64 in [1.2 mm] diameter holes within the range of test at a minimum of 80% and a maximum of 95% of full screen height. Minor adjustments of depth calibration should be made using the peaked signals from the holes to compensate for slight variations in search unit angles. The screen shall be divided by two horizontal lines at 20% (the disregard level or DRL) and 80% (the amplitude rejection level or ARL) of full screen height.

(b) For Joint Class II welds, the instrument gain and attenuation correction controls shall be adjusted to peak all signals from 3/64 in [1.2 mm] diameter holes within the range of test at a minimum of 80% and a maximum of 95% of full screen. Minor adjustments of depth calibration should be made using the peaked signals from the holes to compensate for slight variations in search unit angles. The screen shall be divided by two horizontal lines at 40% (the DRL) and 80% (the ARL) of full screen.

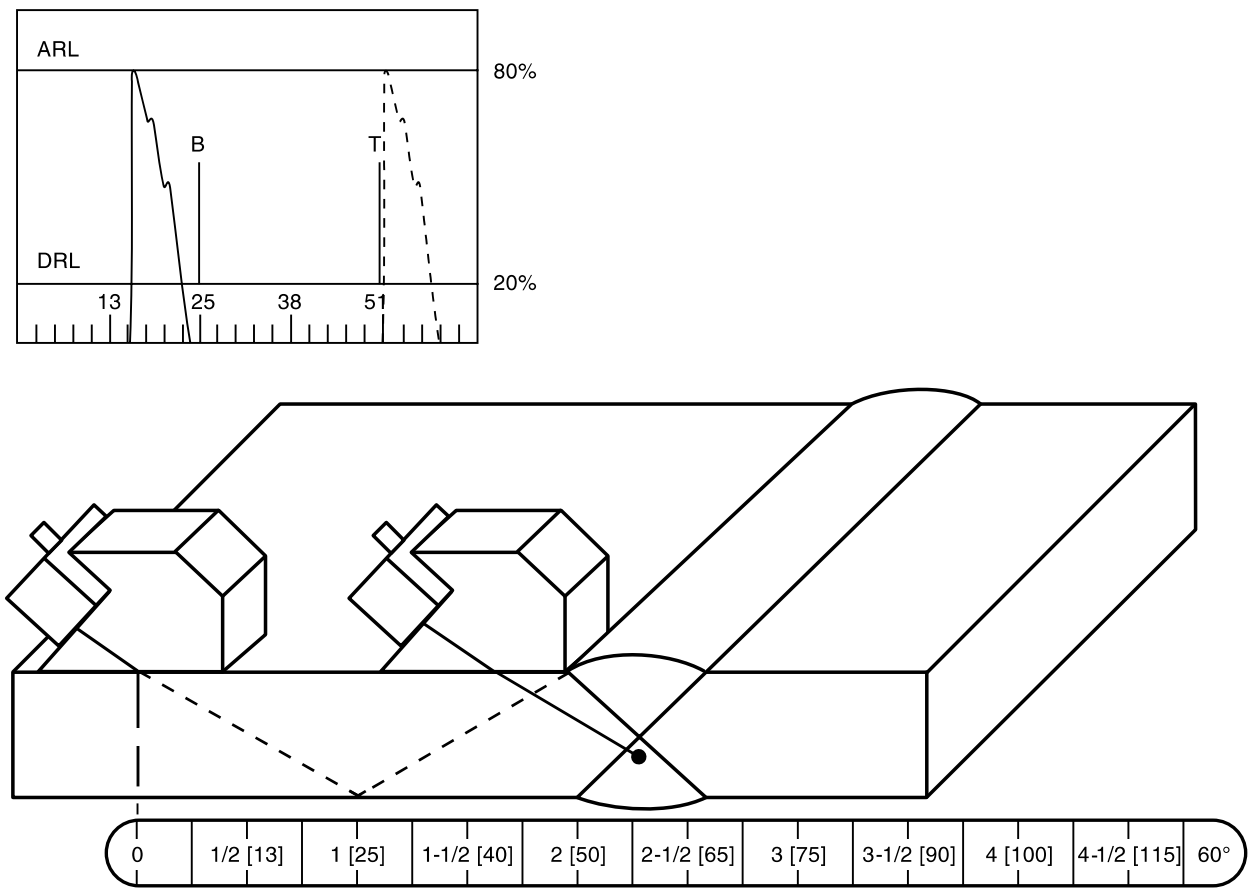

Notes:
1. Weld thickness = 1 in [25 mm].
2. Angle is 60°.
3. Depth calibration range is 1/2 in to 2 in [13 mm to 50 mm].

Dimensions: in [mm] except for angles.

Figure 45—Typical Screen Calibration

Copyright American Welding Society
Provided by IHS under license with AWS
No reproduction or networking permitted without license from IHS
Licensee=University of Texas Revised Sub Account/5620001114
Not for Resale, 08/29/2012 23:50:47 MDT

8.4.5.4 Surface Preparation. All surfaces to which a search unit is applied shall be free of loose scale, loose paint, weld spatter, grease, dirt, and any other foreign matter that might interfere with the scanning procedure. The surface shall have a contour permitting intimate coupling between the search unit and the scanning surface.

8.4.5.5 Test Procedure

(1) Lamination Test

(a) Before the shear wave test is conducted on welds in carbon and low-alloy steel plates, a compressional wave test shall be performed to determine the presence of any interfering laminar discontinuities.

(b) The test shall be performed using a 1 in [25 mm] diameter 2.25 MHz longitudinal wave transducer. With the first back reflection from the plate adjusted to 80% of full screen height, the full width of the area is scanned. If a discontinuity is noted that causes a complete loss or transposition of the first back reflection, the discontinuity shall be noted on the weld inspection report. The weld in the area of the discontinuity cannot be reliably tested with shear waves from the side containing the discontinuity.

(2) Butt Joint Weld

(a) The entire weld volume and heat-affected zone, excluding the weld reinforcement, shall be scanned with shear waves by directing the sound beam toward or across and along the weld axis (see Figure 46).

(b) To detect longitudinal discontinuities in welds not ground flush, the search unit shall be oscillated to the left and right with an included angle of approximately 30° while continuously scanning perpendicularly to the weld. The lateral movement advancing the search unit along the longitudinal axis of the weld shall not exceed 75% of the transducer width. The weld shall be scanned from one surface with an effective beam width on two sides, or from one side on two surfaces (see Figure 47).

The scanning area shall begin with the search unit touching the weld reinforcement and shall include an area wide enough to ensure that the entire weld and heat-affected zone are covered by the second half of the first skip distance.

(c) To detect transverse discontinuities in welds not ground flush, the search unit shall be placed on the base-metal surface at the edge of the weld. The sound beam shall be directed by angling the search unit toward the weld at approximately 15° to the longitudinal axis of the weld. Scanning shall be performed by moving the search unit along the weld edge from both sides on one surface and from two opposing directions.

(d) To detect longitudinal discontinuities in welds ground flush, the search unit shall be oscillated to the left and right with an included angle of approximately 30° while continuously scanning perpendicularly across the weld. The weld shall be scanned from one surface on two sides of the weld when possible.

Where this procedure is impossible, the weld may be scanned from one side on two surfaces or from one side on one surface using at least a full skip distance (see Figure 48). The lateral movement advancing the search unit along the longitudinal axis of the weld shall not exceed 75% of the transducer width per transverse scan.

(e) To detect transverse discontinuities in welds ground flush, the search unit shall be oscillated to the left and right with an included angle of approximately 30°

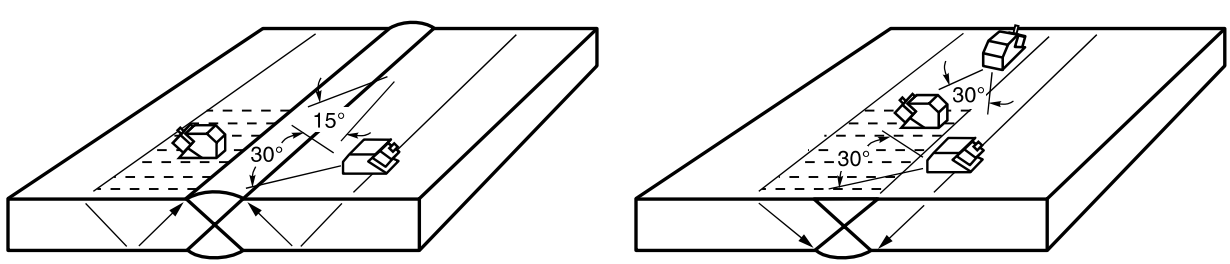

(A) SCANNING PROCEDURE FOR WELDS NOT GROUND FLUSH

(B) SCANNING PROCEDURE FOR WELDS GROUND FLUSH

Figure 46—Test Procedure—Butt Joint Welds

Copyright American Welding Society
Provided by IHS under license with AWS
No reproduction or networking permitted without license from IHS
Licensee=University of Texas Revised Sub Account/5620001114
Not for Resale, 08/29/2012 23:50:47 MDT

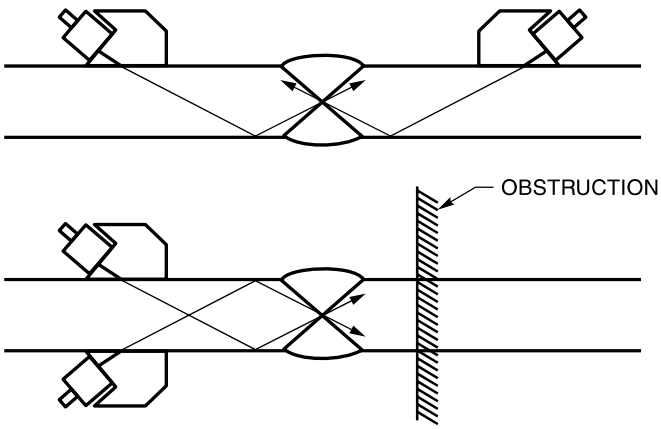

Figure 47—Method of Detecting Longitudinal Discontinuities in Butt Joint Welds Not Ground Flush

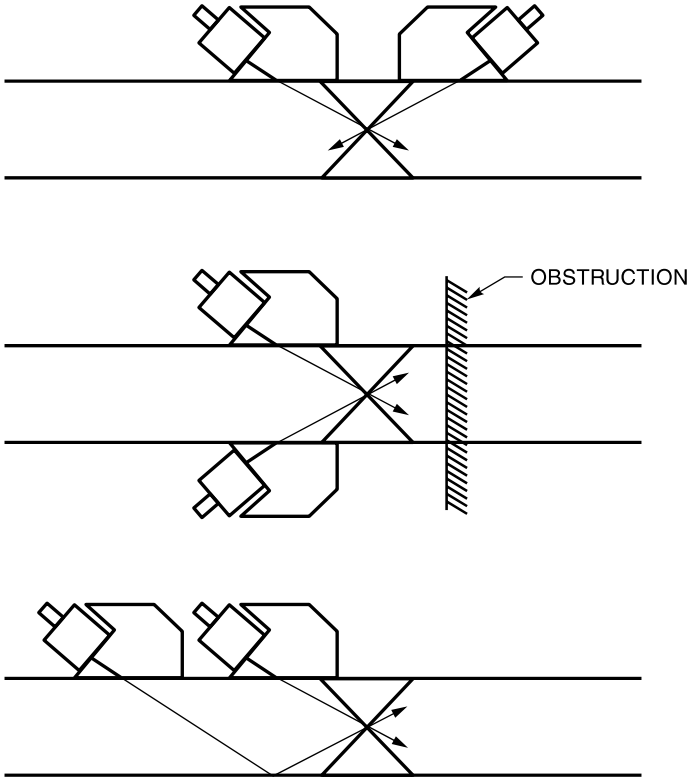

Figure 48—Method of Detecting Longitudinal Discontinuities in Butt Joint Welds Ground Flush

Copyright American Welding Society
Provided by IHS under license with AWS
No reproduction or networking permitted without license from IHS
Licensee=University of Texas Revised Sub Account/5620001114
Not for Resale, 08/29/2012 23:50:47 MDT

while continuously scanning along the top of the weld from two opposing directions. If the weld width exceeds the width of the transducer, parallel scans shall be performed so that each scan overlaps the previous scan by at least 25% of the transducer width. An area wide enough to ensure coverage of the weld and heat-affected zone shall be scanned.

(3) Corner Welds

(a) The entire weld and heat-affected zone, excluding the weld reinforcement, shall be scanned with shear waves by directing the sound beam toward or across and along the weld axis.

(b) To detect longitudinal discontinuities, the search unit shall be oscillated to the left and right with an included angle of approximately 30° while continuously scanning perpendicularly to the weld. The lateral movement advancing the search unit along the longitudinal axis of the weld shall not exceed 75% of the transducer width per transverse scan. The weld shall be tested using the first full skip distance from surface "A" as shown in Figure 49.

(c) To detect transverse discontinuities, the search unit shall be oscillated to the left and right with an included angle of approximately 30° while continuously scanning along the top of the weld from two opposing directions. If the weld width exceeds the width of the transducer, parallel scans shall be made so that each scan overlaps the previous scan by at least 25% of the transducer width. An area wide enough to ensure complete coverage of the weld and heat-affected zone shall be scanned.

(4) T-Joint Welds. The entire weld and heat-affected zone excluding the weld reinforcement shall be scanned with shear waves. The search unit shall be oscillated to the left and right with an included angle of approximately 30° while continuously scanning perpendicularly to the weld. The lateral movement advancing the search unit along the longitudinal axis of the weld shall not exceed 75% of the transducer width per transverse scan. The weld shall be tested from surfaces "A" and "B" as shown in Figure 50, using the first full skip distance, or from surface "C" as shown in Figure 51, using the first half skip distance.

(5) Discontinuities. If discontinuities are detected, the sound beam shall be directed to maximize the signal amplitude. If the signal amplitude equals or exceeds the DRL, the maximum amplitude, location, length, depth, and zone location shall be determined.

(a) To determine the length of a discontinuity, the transducer shall be positioned for maximum signal response and moved parallel to the discontinuity axis until the signal drops rapidly to the base line. The transducer is then returned to the position where the indication began to drop rapidly to the base line. The plate is marked at the center of the transducer. This mark shall be defined as one extremity of the discontinuity and the procedure shall be repeated in the opposite direction to determine the other extremity.

(b) The depth of a discontinuity from the scanning surface shall be determined by the position of the signal on the viewing screen when the signal is maximized.

(c) The zone location of a discontinuity shall be determined by observing the depth of the signal on the screen and marking the weld at the corresponding depth on the material surface.

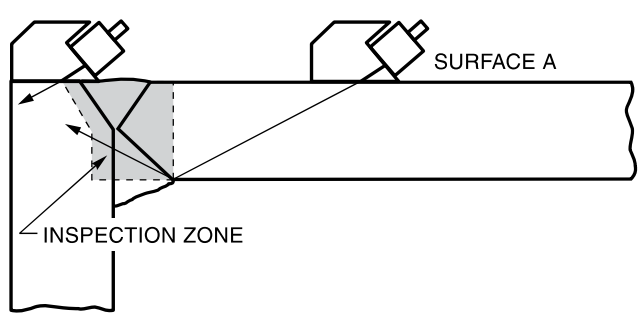

Figure 49—Method of Detecting Longitudinal Discontinuities in Corner Welds Not Ground Flush

Copyright American Welding Society
Provided by IHS under license with AWS
No reproduction or networking permitted without license from IHS
Licensee=University of Texas Revised Sub Account/5620001114
Not for Resale, 08/29/2012 23:50:47 MDT

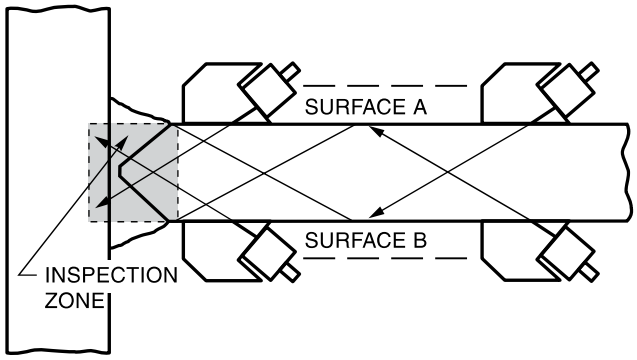

Figure 50—Procedure for Testing T-Joint Welds

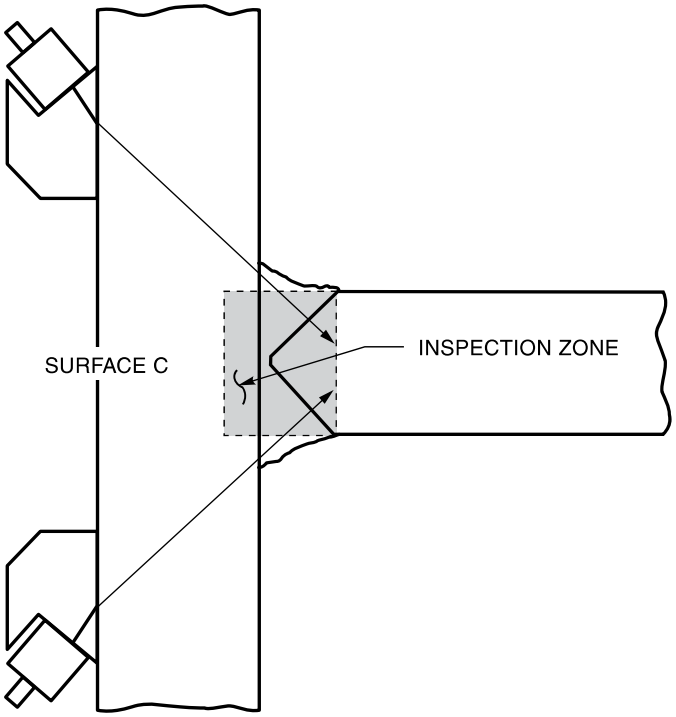

Figure 51—Method of Using Procedure for Testing T-Joint Welds

8.4.6 Acceptance Standards

8.4.6.1 Joint Class I. Discontinuities shall be evaluated as follows:

(1) Any discontinuity whose reflection exceeds 80% of full screen height shall be rejected.

(2) Discontinuities whose reflections equal 20% or greater up to and including 80% of full screen height shall be evaluated as follows:

(a) If the discontinuity length exceeds T/2 (where T = thickness of the thinner member), it shall be rejected. In no case shall the length of any single discontinuity exceed 1-1/2 in [40 mm].

(b) Any two discontinuities separated by less than 2L of sound metal (where L = length of the longest discontinuity), shall be considered a single discontinuity. The maximum distance between the outer extremities of any two such discontinuities or the sum of their lengths,

Copyright American Welding Society
Provided by IHS under license with AWS
No reproduction or networking permitted without license from IHS
Licensee=University of Texas Revised Sub Account/5620001114
Not for Resale, 08/29/2012 23:50:47 MDT

whichever is greater, shall not exceed the length specified in 8.3.6.1(1)(a).

(c) If the total accumulative lengths of discontinuities in any 12 in [300 mm] of weld length exceeds 1T, that weld length shall be rejected. When less than 12 in [300 mm] of weld is inspected, the 1T criterion applies to the length inspected.

8.4.6.2 Joint Class II. Discontinuities shall be evaluated as follows:

(1) Any discontinuity whose reflection exceeds 80% of full screen height and whose length exceeds 1/4 in [6 mm] shall be rejected. Adjacent discontinuities whose reflections exceed 80% of full screen, separated by less than 2L of sound metal (where L = length of longest discontinuity), shall be considered a single discontinuity.

(2) Discontinuities whose reflections equal 40% of full screen height, up to and including 80%, shall be evaluated as follows:

(a) If the discontinuity length exceeds 1T (where T = thickness of the thinner member), it shall be rejected. In no case shall the length of any single discontinuity exceed 2 in [50 mm].

(b) Any two discontinuities separated by less than 2L of sound metal (where L = length of longest discontinuity) shall be considered as a single discontinuity. The maximum distance between the outer extremities of any two such adjacent discontinuities or the sum of their lengths, whichever is greater, shall not exceed the length specified in 8.3.6.2(2)(a).

(c) If the cumulative length of discontinuities in any 12 in [300 mm] of weld exceeds 2T, that weld length shall be rejected. Where less than 12 in [300 mm] of weld is inspected, the 2T criterion applies to the length inspected.

8.4.7 Test Results

8.4.7.1 Recording and Reporting Discontinuities. Discontinuities shall be reported as follows:

(1) The location, length, depth, maximum amplitude, and zone location of discontinuities having a signal amplitude that equals or exceeds the DRL shall be recorded and reported.

(2) Indications less than the DRL shall be disregarded.

8.4.7.2 Record Data and Report Sheets. The ultrasonic test data and report sheets for inspection results of welds shall contain, as a minimum, the following information:

(1) Weld identification,

(2) Location,

(3) Type of weld,

(4) Type of material,

(5) Thickness of material,

(6) Joint identification,

(7) Segment number,

(8) Length of weld inspected,

(9) Operational procedure identification,

(10) Equipment used for inspection and its record of calibration [see 8.3.8(3)],

(11) Reference block identification,

(12) Inspection results,

(13) Acceptance or rejection,

(14) Signature of inspection personnel,

(15) Date of test.

8.4.8 Special Notes

8.4.8.1 Supplemental ultrasonic inspection techniques that contribute to the final inspection result shall be recorded, if used.

8.4.8.2 All repaired areas, plus an additional 3 in [75 mm] beyond each end of repair, shall be retested as original welds, and the test results shall be recorded in conformance to 8.4.7.

8.4.8.3 The instrument shall be allowed to warm up before calibration is attempted. The equipment shall be calibrated with the reference calibration standard each time it is used and shall be recalibrated at least once every 4 h during continuous use, whenever the electric power to the instrument has been interrupted or whenever the calibration of the equipment is suspected of being in error.

8.4.9 Defect Removal and Repair. See Clause 9, Modification or Repair.

8.5 Magnetic-Particle Inspection

8.5.1 General. Magnetic-particle inspection of welded joints, where required, shall be conducted in conformance to the procedures specified herein, which include standards for acceptance.

8.5.2 Personnel Qualification. Personnel qualification and records shall conform to the American Society for Nondestructive Testing SNT-TC-1A, *Recommended Practice, Supplement B, Magnetic Particle*.

Copyright American Welding Society
Provided by IHS under license with AWS
No reproduction or networking permitted without license from IHS
Licensee=University of Texas Revised Sub Account/5620001114
Not for Resale, 08/29/2012 23:50:47 MDT

8.5.3 Extent of Inspection

8.5.3.1 Information furnished to the bidder shall clearly identify the extent of magnetic-particle inspection to be performed.

8.5.3.2 Drawings with symbols shall be in conformance with AWS A2.4, *Standard Symbols for Welding, Brazing, and Nondestructive Examination.*

8.5.4 Equipment

8.5.4.1 Source of Magnetic Fields. The following magnetizing equipment shall be capable of inducing a magnetic flux of suitable intensity in the desired direction:

(1) Prod Method

(a) Portable prod-type electrical contacts shall be spaced 3 in to 8 in [75 mm to 200 mm] apart using direct current at 100 A to 125 A per 1 in [25 mm] of spacing.

(b) At least two separate examinations shall be carried out using the dry particle medium. Prods shall be placed so that the magnetizing flux during one examination is perpendicular to the other examination direction.

(2) Coil Method

(a) Multiple coils shall be looped around the part and shall be capable of producing a magnetic field strength of 3000 A to 10 000 A turns using direct current.

(b) At least two separate examinations shall be carried out using dry or wet particle media. The second examination shall be with magnetic flux at right angles to the first examination or a different magnetic source may be used.

(c) Examination of welds by the magnetic-particle method shall be made over an area including the weld and base metal and extending at least 1/2 in [13 mm] on each side of the weld.

(3) Yoke Method

(a) Either alternating current (ac), direct current (dc), or permanent magnetic yokes may be used. Alternating current yokes shall be calibrated and be capable of lifting a minimum of 10 lb [4.5 kg] for the maximum pole spacing that will be used. Direct current yokes and permanent magnets shall be calibrated and be capable of lifting 40 lb [18 kg] for the maximum pole spacing.

(b) At least two separate examinations shall be done using dry or wet particle media. The second examination shall be with the magnetic flux at right angles to the first examination.

8.5.4.2 Particle Application and Removal

(1) Dry Particles. Dry particles may be applied by means of mechanical shakers, bulb blowers, or mechanical blowers. Excess particles shall be removed by means of a dry air current of sufficient force to remove the excess particles which are not indicative of discontinuities. Extreme care should be taken when removing the magnetic particles so that any particles indicative of subsurface indications are not removed.

(2) Wet Particles. Wet particles may be applied by means of spraying or dipping per ASTM E 709, *Standard Guide for Magnetic Particle Examination*.

8.5.4.3 Lighting. The weld areas shall be adequately illuminated for proper evaluation of the indications revealed on the weld surface.

8.5.4.4 Examination Medium. The magnetic particles used for detection of defects shall be as follows:

(1) Dry Particles. Dry particles used shall be of high permeability and low retentivity and of such size and shape as will produce suitable indications. It is desirable that the color be such as to provide adequate contrast with the background of the surface being examined.

(2) Wet Particles. Wet particles used shall be red or black or, alternatively, may be fluorescent when viewed under ultraviolet illumination. The particles shall be suspended in a suitable liquid medium in the concentration recommended by the manufacturer of the particles. Amplified details on the use of wet particles are given in ASTM E 709.

8.5.5 Surface Preparation

8.5.5.1 Surface Finish—Completed Surfaces. As-welded surfaces shall be considered suitable for inspection, without any grinding, provided the following conditions are met:

(1) There shall be no roll-over or undercutting, and the deposited metal shall be fused smoothly and uniformly into the plate surfaces.

(2) The finished weld shall be reasonably smooth and free from irregularities, grooves, or depressions.

8.5.5.2 Precleaning. The materials or parts to be examined shall be dry and free of oil or other foreign matter which might interfere with the formation or interpretation of magnetic-particle patterns or indications. Oil or grease shall be removed with petroleum distillate or alcohol.

8.5.5.3 Application of Magnetic Field

(1) Direction. The magnetic field shall be induced in more than one direction to insure detection of discontinuities having axes in any direction.

Copyright American Welding Society
Provided by IHS under license with AWS
No reproduction or networking permitted without license from IHS

Licensee=University of Texas Revised Sub Account/5620001114
Not for Resale, 08/29/2012 23:50:47 MDT

(2) Direct Magnetization. When using direct magnetization, direct current or half-wave rectified alternating current shall be passed through the part being tested for a minimum of 1/5 s.

(3) Indirect Magnetization. Indirect magnetization shall be accomplished by passing magnetizing current through an auxiliary conductor for a minimum of 0.2 s.

(4) Precaution. Care shall be taken to prevent local overheating, arcing, or burning the surface being inspected. The magnetizing current shall not be turned on until after prods have been properly positioned in contact with the surface, and current shall be turned off before the prods are removed.

(5) Demagnetization. When necessary, demagnetization shall be performed.

8.5.6 Acceptance Standards. All surfaces examined by the magnetic-particle method shall be free of linear defects such as cracks, laps, fissures and in-line porosity, and, rounded defects greater than 3/16 in [5 mm]. Linear defects are those indications where the length is greater than 1/16 in [2 mm] and more than three times the width. Rounded defects are indications that are circular or elliptical and where the length is less than three times the width.

8.5.7 Defect Removal and Repair. See Clause 9, Modification or Repair.

8.6 Liquid Penetrant Inspection

8.6.1 General. Liquid penetrant inspection of welded joints, where required, shall be conducted in conformance to the procedures specified herein, which include standards for acceptance.

8.6.2 Personnel Qualifications. Personnel qualification and records shall conform to American Society for Nondestructive Testing SNT-TC-1A, *Recommended Practice, Supplement D, Liquid Penetrant*.

8.6.3 Extent of Inspection

8.6.3.1 Information furnished to the bidder shall identify the extent of liquid penetrant inspection to be performed.

8.6.3.2 Drawings with symbols shall be in conformance with AWS A2.4, *Standard Symbols for Welding, Brazing, and Nondestructive Examination*.

8.6.4 Equipment

8.6.4.1 Penetrant Equipment. Aerosol cans, air, or CO_2, powder spray guns, paint brushes, spraying, or dipping may be used to apply the liquids.

8.6.4.2 Drying Equipment. Paper towels, lint-free cloths, or vacuum equipment may be used for drying.

8.6.4.3 Lighting. The test area shall be adequately illuminated for proper evaluation of the visual indications revealed on the test surface.

8.6.4.4 Fluorescent Penetrants. A darkened area for black light use is necessary. The black light intensity should be 90 foot-candles to 100 foot-candles [900 Lux to 1000 Lux] in the 3650 Angstrom wavelength band. Five min should be allowed for the black light source to warm up to achieve the desired intensity.

8.6.5 Procedure

8.6.5.1 Temperature. The temperature of the penetrant and the part to be inspected shall be 40°F to 125°F [5°C to 50°C] before application of the penetrant. When inspection is necessary under conditions where the temperature of the penetrant and the inspection surface is outside of the 40°F to 125°F [5°C to 50°C] range, the temperatures shall be adjusted to bring them within this range or the procedure shall be qualified or demonstrated to the satisfaction of the customer to be effective at other temperatures.

8.6.5.2 Surface Finish—Completed Surfaces. As-welded surfaces shall be considered suitable for inspection without any grinding, provided the following conditions are met:

(1) There shall be no roll-over or undercutting, valleys or grooves along the axis of, or within, the weld.

(2) The deposited metal shall be fused smoothly and uniformly into the plate surfaces.

(3) The finished weld shall be reasonably smooth and free from irregularities, grooves, or depressions.

8.6.5.3 Precleaning. Before application of penetrant, the surface shall be cleaned.

(1) Rust, scale, slag, weld spatter, or other hard tenacious materials shall be removed by wire brushing, grinding, or machining.

(2) All types of grinding wheels are permitted on steel.

(3) All oil and grease shall be removed with petroleum distillate or alcohol using paper towels or lint-free cloth.

8.6.5.4 Application of Penetrant. The surface to be inspected shall be thoroughly dry before application of the liquid penetrant. The penetrant may be applied by spraying, brushing, or immersion. The area to be inspected shall be completely covered. The surface shall be kept wet for a minimum of 6 min, and during this

Copyright American Welding Society
Provided by IHS under license with AWS
No reproduction or networking permitted without license from IHS
Licensee=University of Texas Revised Sub Account/5620001114
Not for Resale, 08/29/2012 23:50:47 MDT

period additional penetrant should be added, if necessary, to prevent drying. Precautions should be taken to prevent inspection materials from entering inaccessible areas. It is permissible to remove excess penetrant by wiping with paper towels or lint-free cloth.

8.6.5.5 Application of Remover. The remover shall be applied by spraying, immersing, or brushing.

8.6.5.6 Excess Penetrant. Excess penetrant shall be removed from the surfaces to be inspected.

(1) Wet Removal (Water Washable). After an emulsification time to exceed 2 min, the penetrant-emulsified film shall be removed by a water spray. The water pressure shall not exceed 50 psi [350 kPa] and the water temperature shall not be less than 40°F [5°C] nor more than 110°F [45°C]. The spray shall be applied at a distance of 10 in to 15 in [250 mm to 400 mm] from the surface. Washing should be continued until all traces of surface penetrant have disappeared. Where restricted areas prevent the use of a water spray, the penetrant-emulsified film may be removed by repeated applications of dry or water-soaked paper towels or lint-free cloths.

(2) Dry Removal (Solvent)

(a) As much penetrant as possible shall be removed by first wiping the surface thoroughly with a clean, dry cloth or absorbent paper.

(b) The remaining excess penetrant shall be removed by wiping the surface with a clean cloth or absorbent paper damped with remover. Flushing of the surface with any liquid, following application of the penetrant and prior to developing, is prohibited.

(3) Post-Emulsifier Removal. With post-emulsifier penetrants, an additional step is required. This step is the application of a liquid emulsifier prior to the rinsing operation. The emulsifier may be applied by brushing, spraying, or dipping. Emulsifying times of 10 s to 5 min can be used, depending upon prevailing conditions, such as surface roughness or the type of defect sought. The emulsifying time is critical. Once the emulsifying time has been set for a particular test, it should not vary more ±10%. After emulsification, the mixture is removed by a water spray, using the same procedure as for water-washable liquid penetrants.

8.6.5.7 Application of Developer. The developer shall be applied as follows:

(1) Dry. After the surface has been thoroughly dried, the developer shall be applied by dipping, spraying, or brushing. Application of the developer by spraying is preferable. The surface shall be completely covered with developer. It is suggested that the aerosol can or sprayer be held 10 in [250 mm] from the work and be applied in short dusting strokes. The application of excessive developer should be avoided, such as pools in cavities, since it is possible for a thick coating of developer to mask indications.

(2) Liquid. The liquid developer is a suspension of powder in water or a volatile solvent. It is applied by dipping, spraying, or brushing. In any case, a film of powder is left on the surface when the developer dries. Where a water suspension developer is used, drying time may be decreased by the use of warm air.

8.6.5.8 Examination. Visual examination of the surface being inspected shall be made after a minimum of 7 min and a maximum of 30 min after developer has dried. Interpretation and acceptance shall be made according to 8.6.6.

8.6.5.9 Final Cleaning. When the inspection is concluded, the penetrant materials shall be removed as soon as possible by means of brushing or wiping with paper towels or lint-free cloth.

8.6.6 Acceptance Standards. All surfaces examined by the liquid penetrant method shall be free of linear defects such as cracks, laps, fissures, in-line porosity and rounded defects greater than 3/16 in [5 mm]. Linear defects are those indications where the length is greater than 1/16 in [2 mm] and more than three times the width. Rounded defects are indications that are circular or elliptical, and where the length is less than three times the width.

8.6.7 Defect Removal and Repair. See Clause 9, Modification or Repair.

9. Modification or Repair

9.1 General

9.1.1 Introduction. This subclause includes criteria for modification or repair by welding of components for new presses and presses that have been in service. This specification recognizes eventual need for field weld repairs as a result of normal wear and tear, modification, or accident. Each repair or modification becomes the responsibility of the press user or owner, who shall consider its effect on the equipment involved. The original manufacturer should be contacted, if possible, to ensure the projected repair is sound from an engineering standpoint. Safe recommended repairs can only be accomplished with the knowledge of the design loading on the equipment and the repair area.

9.1.2 Modification. A modification shall be interpreted as any change, addition to, or reconstruction of a press component that occurs after the press has been in

--`,,`,`,`,,`,,,,`,,`,`,`,,`,`,`,,`,,-`-`,,`,,`,`,`,`---

Copyright American Welding Society
Provided by IHS under license with AWS
No reproduction or networking permitted without license from IHS

Licensee=University of Texas Revised Sub Account/5620001114
Not for Resale, 08/29/2012 23:50:47 MDT

service. A modification can also be a change by the Manufacturer during fabrication.

9.1.3 Repair. A repair shall be interpreted as all activity undertaken to correct errors, such as in welding and machining, that occur during the fabrication of a press component, or to restore a component which has failed in service.

9.1.4 Modification or Repair—Documentation Responsibility. The press manufacturer or Fabricator, or both, shall furnish drawings, procedures, and instructions for modification and repair of new presses. The field repair service organization shall furnish drawings, procedures, and instructions for modification and repair of in-service presses. Material identification and weld repair procedures shall be thoroughly documented.

9.1.4.1 Documentation by the Manufacturer or repair service organization shall include the following:

(1) Qualification requirements of the welder performing the repair (see 7.1 and 7.13 for minimum requirements).

(2) A list of materials used in the modification or repair of the equipment and the location of materials by some appropriate means such as an outline drawing. The documentation shall contain weld procedure specifications that include the base metal, filler metal, and preheat or postheat treatment so that properly qualified welders can make an acceptable weld repair.

9.1.4.2 The Engineer shall include in all field weld repair procedures a recommended means and acceptance criteria for nondestructive inspection or testing of the repair by qualified personnel.

9.1.5 Modification or Repair—Buyer or Owner's Responsibility

9.1.5.1 The buyer or owner shall appoint the Engineer who shall be responsible for the actual field execution of the repair work and the detailed adherence to the repair procedures.

9.1.5.2 The buyer or owner shall permit only qualified and properly trained personnel to perform field weld repairs.

9.1.5.3 The buyer or owner shall maintain documentation of all repair welds.

9.2 General Provisions for Modification or Repair

9.2.1 The material composition of the components should be identified, and a weld procedure specification approved by the Engineer established, before starting repair or modification.

9.2.2 Modification or repairs, as defined in 9.1.2 and 9.1.3 shall require the approval of the Engineer.

9.2.3 Modification or repair work shall conform to all applicable clauses of this specification.

9.2.4 When a modification is completed by removal of material, adequate design strength shall be maintained to satisfy the requirements of the structure as determined by the Engineer.

9.2.5 No additional members should be welded onto the fillet weld of a previous joint. The old fillet weld shall be removed.

9.2.6 Modification or repair which produces distortion, unfavorable residual stress conditions or inappropriate mechanical properties shall require additional stress reduction by thermal treatment per 10.2 or peening per 10.3. The choice of methods shall be made by the Engineer.

9.2.7 To minimize distortion, removal of material should be done by mechanical methods, such as grinding or machining, rather than thermal processes. If a thermal process is necessary, oxyfuel gas cutting should be avoided. Caution shall be taken when modified or repaired weldments have dissimilar alloy steels as outlined in 10.2.8.

9.3 Defects

9.3.1 A defect shall be interpreted as an indication rejectable according to Clause 8, Inspection, of this specification. Defects shall include, but not be limited to, cracks, slag inclusions, porosity, hot tears, laminations, and lack of fusion.

9.3.2 All defects in weld or base metal shall be completely removed by appropriate methods prior to proceeding with welding or rewelding.

9.3.3 If thermal gouging is used for removing defects, correct procedures shall be employed to ensure elimination of all residual scale and foreign material that would prevent proper welding.

9.3.4 Where a defect has been removed, the area shall be checked by any appropriate inspection method consistent with the requirements of Clause 8, Inspection, to ensure complete removal of the defect before proceeding with welding or rewelding.

9.4 Repair of Weld-Related Defects

9.4.1 Overlap or Excessive Convexity. Excess weld metal should be removed.

9.4.2 Excessive Concavity of Weld or Crater and Undersize Welds. Excessive concavity or undersize welds shall be repaired by welding. All slag shall be removed and the adjacent base metal shall be cleaned before additional welding.

Copyright American Welding Society
Provided by IHS under license with AWS
No reproduction or networking permitted without license from IHS
Licensee=University of Texas Revised Sub Account/5620001114
Not for Resale, 08/29/2012 23:50:47 MDT

9.4.3 Cracks in Weld or Base Metal

9.4.3.1 The size of surface or subsurface crack(s) shall be determined and documented by means of suitable nondestructive examination. The cracks shall be completely removed. Minor cavities resulting from the removal by grinding of shallow surface discontinuities shall be blended into the surrounding area. They need not be repair welded if they do not reduce the wall thickness, drawing requirement or affect machined or gasket fits.

9.4.3.2 Prior to rewelding, these areas shall be checked by an appropriate inspection method, such as magnetic particle or liquid penetrant, to insure complete removal of cracked material.

9.4.3.3 After rewelding in conformance to an approved repair welding procedure, reinspect the repaired areas per Clause 8, Inspection.

9.4.4 Undercut

9.4.4.1 Undercut may be repaired, preferably, by grinding and blending, or by welding. Grinding should be performed with a pencil-type grinder. The grinding marks should be transverse to the length of the weld, and have a smooth finish of 250 microinches [6 microns] RMS or better.

9.4.4.2 Blending shall be done with a slope not to exceed 1 in 2.5. On plates of 1/2 in [13 mm] thickness and above, up to 7% reduction of base material thickness is permitted. Repair of undercut areas by grinding and blending in excess of this amount may be permitted with the approval of the Engineer.

9.4.4.3 When undercut is to be repaired by welding, the surfaces should be prepared and then additional weld metal deposited.

9.4.5 Weld areas containing unacceptable incomplete fusion, excessive porosity, or slag inclusions shall be removed (see 9.5.4) and rewelded.

9.5 Repair of Defects in Base Metal

9.5.1 Cut Edge Defects. A defect in a cut edge as shown in Figure 52, that exceeds the limits imposed in Table 16, shall be removed and repaired in accordance with 9.5.4.

9.5.2 Arc Strikes and Temporary Attachment Areas. Arc strikes and temporary welds in critical locations, as defined by the Engineer, shall be removed and ground smooth to assure that no abrupt change in section exists. The smoothed area shall be inspected by an appropriate nondestructive examination method to assure that there are no existing cracks or similar discontinuities. Any cracks or similar discontinuities shall be repaired in accordance with 9.5.4.

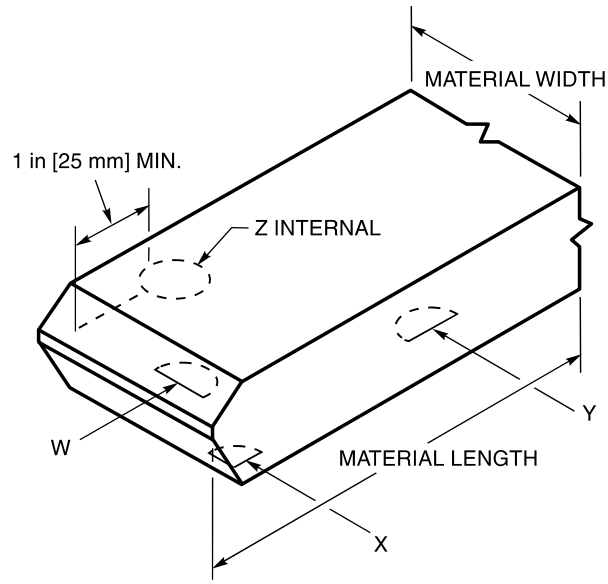

Figure 52—Edge Discontinuities in Cut Material

9.5.3 Lamellar Discontinuities. Where discontinuities such as (W), (X), or (Y) in Figure 52 are observed prior to completing the joint, the size and shape of the discontinuity shall be determined and documented by ultrasonic testing. The area of the discontinuity shall be determined as the area of total loss of back reflection, when tested in conformance to the procedure of ASTM A 435, *Specification for Straight-Beam Ultrasonic Examination of Steel Plates.*

9.5.3.1 For acceptance, the area of the discontinuity (or the aggregate area of multiple discontinuities) shall not exceed 4% of the cut material area (length × width) with the following exception: if the length of discontinuities on any transverse section, as measured perpendicular to the cut material length, exceeds 20% of the cut material width, the 4% cut material area shall be reduced by the percentage amount of the width exceeding 20%. (For example, if a discontinuity is 30% of the cut material width, the area of discontinuity cannot exceed 3.6% of the cut material area.) The discontinuity on the cut edge of the cut material shall be gouged out to a depth of 1 in [25 mm] beyond its intersection with the surface by chipping, air carbon arc gouging, or grinding. It should be blocked off by welding with a low-hydrogen process in layers not exceeding 1/8 in [3 mm] in thickness for at least the first four layers.

Copyright American Welding Society
Provided by IHS under license with AWS
No reproduction or networking permitted without license from IHS
Licensee=University of Texas Revised Sub Account/5620001114
Not for Resale, 08/29/2012 23:50:47 MDT

Table 16
Limits on Acceptability and Repair of Cut Edge Discontinuities of Plate

Description of Discontinuity	Repair Required
Any discontinuity 1 in [25 mm] in length or	None, need not be explored
Any discontinuity over 1 in [25 mm] in length and maximum depth.	None, but the depth should be explored[a]
Any discontinuity over 1 in [25 mm] in length with depth over 1/8 in [3 mm] but not greater than 1/4 in [6 mm]	Remove, need not weld
Any discontinuity over 1 in [25 mm] in length with depth over 1/4 in [6 mm] but not greater than 1 in [25 mm]	Completely remove and weld. Aggregate length of welding shall not exceed 20% of the length of the plate edge being repaired.
Any discontinuity over 1 in [25 mm] in length with depth greater than 1 in [25 mm]	See 9.5.3

[a] A spot check of 10% of the discontinuities on the cut surface in question should be explored by grinding to determine depth. If the depth of any one of the discontinuities explored exceeds 1/8 in [3 mm], then all of the discontinuities remaining on that edge shall be explored by grinding to determine depth. If none of the discontinuities explored in the 10% spot check have a depth exceeding 1/8 in [3 mm], then the remaining of the discontinuities on that edge need not be explored.

9.5.3.2 If a discontinuity (Z), not exceeding the allowable area in 9.5.3.1, is discovered after the joint has been completed and is determined to be 1 in [25 mm] or more away from the face of the welds, as measured on the cut material surface, no repair of the discontinuity is required. If the discontinuity (Z) is less than 1 in [25 mm] away from the face of the weld, it shall be gouged out to a distance of 1 in [25 mm] from the fusion zone of the weld by chipping, air carbon arc backgouging, or grinding. It shall then be blocked off by welding with a low-hydrogen process in layers not exceeding 1/8 in [3 mm] in thickness for at least the first four layers.

9.5.3.3 If the area of the discontinuity (W), (X), (Y), or (Z) exceeds the allowable in 9.5.3.1, the cut material or subcomponent shall be rejected and replaced, or repaired at the discretion of the Engineer.

9.5.3.4 The aggregate length of weld repair shall not exceed 20% of the length of the material edge without approval of the Engineer.

9.5.3.5 All repairs shall conform to this specification. Backgouging of the discontinuity may be done from either surface or edge.

9.5.4 Removal of Defective Areas. The removal of weld metal or portions of the base metal may be done by machining, grinding, chipping, oxygen gouging, or air carbon arc gouging. It shall be done in such a manner that the remaining weld metal or base metal is not nicked or undercut.

9.5.4.1 Oxygen gouging shall not be used on quenched and tempered steel.

9.5.4.2 Defective portions of the weld shall be removed without substantial removal of the base metal.

9.5.4.3 The surfaces shall be cleaned thoroughly before welding. Defects that occur in material handling that do not affect the structural integrity of the design, as determined by the Engineer can be repaired by grinding.

9.5.4.4 Additional weld metal, when required to compensate for any deficiency in size, shall be deposited using a low-hydrogen welding process.

9.6 Correction of Distortion and Camber. Members distorted by welding may be straightened by mechanical means, in combination with, or by careful application of localized heat. The temperature of the heated area shall be measured by an approved method, such as temperature indicating crayons or contact pyrometer, and limited to that permitted by the material being straightened. For quenched and tempered, or normalized and tempered steels, the straightening temperature shall not exceed the tempering temperature less 100°F [40°C] For hot rolled steels, the straightening temperature shall not exceed 1200°F [650°C]. All straightening shall conform to a written procedure approved by the Engineer.

Copyright American Welding Society
Provided by IHS under license with AWS
No reproduction or networking permitted without license from IHS
Licensee=University of Texas Revised Sub Account/5620001114
Not for Resale, 08/29/2012 23:50:47 MDT

9.7 Correction of Improperly Fitted and Welded Members. The Engineer shall approve all cutting and sectioning of the structure to provide access for repair. Cutting is to be done by methods provided in 9.5.3. Inspection shall be performed per Clause 8, Inspection. Upon completion of the repair, the structure shall be returned to its original configuration or a modified configuration approved by the Engineer. All repairs, rework, and reassembly shall satisfy the requirements of this specification.

9.8 Repair Welding of Castings

9.8.1 All repair welding of castings shall be made and inspected as specified in 8.3.

9.8.2 The area to be repaired by welding shall, where necessary, be preheated by torch or in a furnace or by an electrical resistance method to a temperature not less than the preheat temperature of Table 6 for the material class and welding process used. The preheat temperature shall be maintained at all times until the welding is completed, except for the provisions of 9.8.3.

9.8.3 When postheating is specified, the preheat temperature shall be maintained until the postheating cycle begins. The rate of heating, the holding temperature, and the rate of cooling shall conform to Clause 10, Postweld Treatments, of this specification.

9.9 Repair of Weldments After Machining

9.9.1 The size of the surface or subsurface defects shall be determined and documented by means of suitable nondestructive examination. The defects shall be completely removed.

9.9.2 Prior to rewelding, these areas shall be checked by an appropriate inspection method, such as magnetic particle or dye penetrant, to insure complete removal of defective material.

9.9.3 After rewelding in conformance to an approved repair welding procedure, the repaired areas shall be reinspected per Clause 8, Inspection.

10. Postweld Treatments

10.1 Introduction. This clause describes various postweld treatments to condition the weldment prior to its introduction into service. These treatments are designed to do one or more of the following:

(1) Maintain dimensional stability,

(2) Reduce or redistribute residual stress,

(3) Improve the microstructure,

(4) Improve fatigue life,

(5) Improve mechanical properties.

10.1.1 Where residual stress levels can be controlled during fabrication, 6.7 of this specification shall apply.

10.1.2 The postweld treatment methods discussed in this clause are thermal, peening, and vibratory. Postweld treatments other than thermal and peening require the approval of the Engineer.

10.1.3 Residual stress reduction methods used to minimize distortion of weldments will include, but not be limited to, those described in this clause.

10.2 Thermal Residual Stress Reduction. Stresses induced during the manufacture of the weldments or which were residual in the base material may be reduced by thermal treatment. Furnaces, portable electric resistance heaters and other controlled heat sources may be used. Thermal stress reduction is a process which:

(1) Raises the temperature of a metal at a controlled rate to an appropriate level for the metal (heating cycle), and,

(2) Maintains that elevated temperature for a specified time period (holding cycle), and

(3) Lowers the temperature at a controlled rate (cooling cycle).

10.2.1 Any deviation from the procedures of this clause shall be approved by the Engineer.

10.2.2 The weldment shall be supported during thermal stress reduction to minimize sagging and distortion.

10.2.3 When two or more items are heated in a furnace at the same time, they shall be spaced so that all pieces will heat uniformly.

10.2.4 Baffles or insulating material should be placed, to protect any area of the weldment from direct impingement of heat source.

10.2.5 The heat source temperature shall be controlled and recorded from a thermocouple(s) that have surface contact with the weldment and are shielded from direct impingement of the heat source. Records shall include the location and calibration of each thermocouple, along with traceable weldment identification such as weldment name, part number, or serial number. The records and data shall become part of the weldment documentation.

10.2.6 The postweld heat treatment holding temperature shall be as specified by the Engineer. The furnace temperature shall not exceed 400°F [200°C], when the weldment is placed into it. After the temperature of the weldment reaches 400°F [200°C], the rate of heating shall not exceed 100°F [55°C] per hour until the weldment reaches the holding temperature. For other heat

Copyright American Welding Society
Provided by IHS under license with AWS
No reproduction or networking permitted without license from IHS
Licensee=University of Texas Revised Sub Account/5620001114
Not for Resale, 08/29/2012 23:50:47 MDT

sources, such as portable electric pads, the rate of temperature rise shall not exceed 100°F [55°C] per hour.

10.2.7 Holding Cycle. The minimum holding time shall be 1 h, plus one additional hour for every 1 in [25 mm] of thickness of the thickest section of the weldment. The minimum holding time shall be 2 h.

10.2.8 Cooling Cycle. The weldment should be cooled at a rate not exceeding 100°F [55°C] per hour, until the component reaches 300°F [150°C]. Blowers or fans shall not be used to increase the cooling rate during the cooling cycle.

10.2.9 Steels Not Recommended for Postweld Heat Treatment (PWHT)

10.2.9.1 PWHT of welds in A 514, A 517, A 709 Grades 100 and 100W, and A 710 steel is not recommended. PWHT can degrade the notch toughness of the heat-affected zone (HAZ) of these weldments. PWHT in these steels can lead to stress relief cracking.

10.2.9.2 When PWHT is required to reduce the potential for cracking due to environmental considerations, or to maintain dimensional stability considerations, care shall be taken. Appropriate NDE methods shall be used to examine the weldments.

10.2.10 Postweld heat treatment of alloy steels not listed in Table 2 shall be accomplished at a temperature of at least 100°F [55°C] below the final tempering temperature of that alloy steel. The final tempering temperature shall be confirmed by the pertinent ASTM material standard or by other documentation.

10.3 Peening. Shot and mechanical peening provide for improved fatigue life in the weld joint as a result of the surface material being placed in compression.[6, 7, 8] Mechanical peening can also be applied to intermediate weld passes to reduce residual stresses, cracking, and distortion.

10.3.1 Controlled Shot Peening. Shot peening, following controlled shot peening specifications, may be used to reduce surface tensile stresses. Controlled shot peening specifications shall include Almen intensity, shot size, pressure, and percent coverage.

10.3.2 Hammer Peening. Hammer peening may be used on external surfaces to improve fatigue life. Peening should be controlled to prevent introducing stress concentrations to, or cracking of the weld or base metal. Controlled air hammer peening procedures shall specify hammer size, peening tool radius, air pressure, and extent and density of coverage.

10.3.3 Peening Applications

10.3.3.1 Root Pass. No peening shall be done on the root pass.

10.3.3.2 Intermediate Passes. Hammer peening may be used on intermediate weld layers for control of shrinkage stresses in thick welds to prevent cracking.

10.3.3.3 Surface Passes. Peening of the surface layer of the weld and the base metal at the edges of the weld is permitted for fatigue life improvement. Under controlled conditions, both shot and mechanical peening places the exposed material in compression which reduces residual tensile stresses at the weld surface, the toe of the weld and the base metal adjacent to the weld.

10.3.3.4 Cleanup. All slag shall be removed prior to peening. The use of manual slag hammers, chisels, and lightweight vibrating tools for the removal of slag and spatter is permitted, but is not considered peening.

10.4 Vibratory Conditioning

10.4.1 Vibratory conditioning of welded structures to obtain dimensional stability for machining of the weldment may be employed with the approval of the Engineer.

10.4.2 Vibratory conditioning is not to be substituted for thermal stress relief.

[6] Bremen, U., Smith, I. F. C., and Hirt, M. A... "Crack growth behavior in a welded joint improved by residual stress method," International Conference: Fatigue of Welded Construction; Maddox, S. J. (ed), The Welding Institute, Abington, Cambridge, 1987.

[7] The Welding Institute. *Improving the Fatigue Performance of Welded Joints*, Ed. G. S. Booth. Abington, Cambridge: 1983.

[8] Metal Improvement Company. Shot Peening Application, Eighth Edition.

Copyright American Welding Society
Provided by IHS under license with AWS
No reproduction or networking permitted without license from IHS
Licensee=University of Texas Revised Sub Account/5620001114
Not for Resale, 08/29/2012 23:50:47 MDT

Annex A (Normative)
Storage and Treatment of Electrodes and Fluxes

This annex is part of AWS D14.5/D14.5M:2009, *Specification for Welding of Presses and Press Components*, and includes mandatory elements for use with this standard.

Note: When available, the consumable manufacturer's specific requirements for storage, atmospheric exposure and reconditioning shall be applied. When the consumable manufacturer's specifications are not available, the following shall be used:

A1. SMAW Electrodes

A1.1 Storage Conditions

(1) **Low Hydrogen Electrodes.** All electrodes having low hydrogen coverings conforming to AWS A5.1/A5.1M and AWS A5.5/A5.5M should be purchased in hermetically sealed containers or shall be baked by the user in accordance with A1.3 prior to use. Immediately after opening the hermetically sealed container, electrodes should be stored in ovens held at a temperature of at least 250°F [120°C]. Electrodes shall be rebaked no more than once. Electrodes that have been wet shall not be used.

(2) **Nonlow-Hydrogen Electrodes.** Electrodes in unopened cans or cartons retain the proper moisture content indefinitely when stored in good condition. If exposed to humid air for long periods of time, electrodes from opened container may pick up enough moisture to affect operating characteristics or weld quality. If moisture appears to be a problem, discard the affected electrodes. Store electrodes from freshly opened containers in a dry environment. Cellulosic coverings for E6010 and E6011 electrodes need moisture levels of 3% to 7% for proper operation; therefore, storage or conditioning above ambient temperature may dry them too much and adversely affect their operation.

A1.2 Approved Low Hydrogen Electrode Atmospheric Time Periods. After hermetically sealed containers are opened or after electrodes are removed from baking or storage ovens, the electrode exposure to the atmosphere should not exceed the values shown for the specific electrode classification (see Tables A.1 and A.2) with optional supplemental designators, where applicable. Electrodes exposed to the atmosphere for periods less than those shown may be returned to a holding oven maintained at 250°F [120°C] min; after a minimum hold period of 4 h at the specified minimum temperature, the electrodes may be reissued.

A1.3 Reconditioning of Low Hydrogen Electrodes. Electrodes exposed to the atmosphere for periods, greater than those permitted above shall be reconditioned as follows:

(1) All electrodes having low-hydrogen coverings conforming to AWS A5.1/A5.1M shall be baked for at least 1 h between 500°F and 800°F [260°C and 430°C], or

(2) All electrodes having low-hydrogen coverings conforming to AWS A5.5/A5.5M shall be baked for at least 1 h at temperatures between 700°F [370°C] and 800°F [430°C].

A1.4 Reconditioning of Nonlow-Hydrogen Electrodes. Nonlow-hydrogen electrodes shall be reconditioned according to the consumable manufacturer's specifications or discarded.

A2. FCAW and Metal Core Electrodes

A2.1 Electrode Packaging. Electrodes for FCAW and metal core welding should be received in moisture-resistant packages that are undamaged. They should be protected against contamination and injury during shipment

Copyright American Welding Society
Provided by IHS under license with AWS
No reproduction or networking permitted without license from IHS

Licensee=University of Texas Revised Sub Account/5620001114
Not for Resale, 08/29/2012 23:50:47 MDT

Table A.1
Electrodes Covered by AWS A5.1/A5.1M,
Specification for Carbon Steel Electrodes for Shielded Metal Arc Welding

Electrode Designation	Maximum Exposure Time
E70XX	4 h
E70XXR[a]	9 h
E70XXHZR[a]	9 h
E7018M	9 h

[a] The optional supplemental designator, R, designates a low hydrogen electrode which has been tested for covering moisture content after exposure to a moist environment for 9 h and has met the maximum level permitted in AWS A5.1/A5.1M.

Table A.2
Electrodes Covered by AWS A5.5/A5.5M,
Specification for Low-Alloy Steel Electrodes for Shielded Metal Arc Welding

Electrode Designation	Maximum Exposure Time
E70XX-X	4 h
E70XX-X-R[a]	9 h
E70XX-X-HZR[a]	9 h
E80XX-X	2 h
E80XX-X-R[a]	9 h
E80XX-X-HZR[a]	9 h
E90XX-X	1 h
E90XX-X-R[a]	9 h
E90XX-X-HZR[a]	9 h
E100XX-X	1/2 h
E100XX-X-R[a]	9 h
E100XX-X-HZR[a]	9 h
E110XX-X	1/2 h
E110XX-X-R[a]	9 h
E110XX-X-HZR[a]	9 h

[a] The optional supplemental designator, R, designates a low hydrogen electrode which has been tested for covering moisture content after exposure to a moist environment for 9 h and has met the maximum level permitted in AWS A5.5/A5.5M, *Specification for Low-Alloy Steel Electrodes for Shielded Metal Arc Welding*.

and storage. Electrode packages should remain effectively sealed against moisture until the electrode is required for use. When removed from protective packaging and installed on machines, care should be taken to protect the electrodes and coatings, if present, from deterioration or damage. No one shall modify or lubricate an electrode after manufacture for any reason except that drying may be permitted when recommended by the consumable manufacturer.

A2.2 Electrode Storage. When welding is to be suspended for more than 24 h, electrode spools or coils should be removed from the machines and stored in airtight coverings or placed in a storage or drying oven maintained at a temperature of 250°F to 300°F [120°C to [150°C] or as recommended by the consumable manufacturer. Electrodes on spools or coils not consumed within 48 h of accumulated exposure outside sealed or heated storage should be redried as described in A2.3. Electrodes should be identified to facilitate monitoring of total atmospheric exposure time.

A2.3 Drying Temperatures. Only when approved by the consumable manufacturer, FCAW and metal core electrodes on metal supports may be baked once as specified by the consumable manufacturer to restore their condition. If the electrode or the electrode support is damaged by baking, the electrode should not be used. For electrodes in bulk storage packaging, follow the consumable manufacturer's recommendations for exposure and storage.

A3. Solid Wire Electrodes

A3.1 Electrode Care and Storage. Wire should be kept clean and care should be taken to keep wire from being contaminated with rust, oil, moisture, grinding dust, or other materials present in the work environment. When idle, the wire should be kept in its original plastic wrapping and/or shipping container. When a spool of wire is in place on a wire feeder, it should be covered with a protective covering when not used for prolonged periods of time.

A4. Submerged Arc Welding Flux

A4.1 Condition of Flux. Flux used for SAW shall be dry and free of contamination from dirt, mill scale, or other foreign material. All flux should be purchased in packages that can be stored, under normal conditions, for at least six months without such storage affecting its welding characteristics or weld properties. Flux from damaged packages shall be reconditioned according to consumable manufacturer's specifications or discarded. Flux should be placed in the dispensing system immediately upon opening a package, or if used from an opened package, the top 1 in [25 mm] shall be discarded. Flux that has been wet shall not be used.

A4.2 Flux Reclamation. SAW flux that has not been melted during the welding operation may be reused after recovery by vacuuming, catch pans, sweeping or other means. The welding fabricator should have a system for collecting unmelted flux, adding new flux, and welding with the mixture of these two, such that the flux composition and particle size distribution at the weld puddle are relatively constant.

Copyright American Welding Society
Provided by IHS under license with AWS
No reproduction or networking permitted without license from IHS
Licensee=University of Texas Revised Sub Account/5620001114
Not for Resale, 08/29/2012 23:50:47 MDT

Annex B (Normative)
Prequalified Welded Joints

This annex is part of AWS D14.5/D14.5M:2009, *Specification for Welding of Presses and Press Components*, and includes mandatory elements for use with this standard.

Notes for Figures B.1 and B.2

[a] Not prequalified for gas metal arc welding using short circuiting transfer.
[b] Joint is welded from one side only.
[c] Backgouge root to sound metal before welding second side.
[d] SMAW detailed joints may be used for prequalified GMAW (except GMAW-S) and FCAW.
[e] Minimum weld size (E) as shown in Table 4; S as specified on drawings.
[f] If fillet welds are used in statically loaded structures to reinforce groove welds in corner and T-joints, they shall be equal to $1/4T_1$, but need not exceed 3/8 in [10 mm]. Groove welds in corner and T-joints of cyclically loaded structures shall be reinforced with fillet welds equal to $1/4T_1$, but need not exceed 3/8 in [10 mm].
[g] Butt and T-joints are not prequalified for dynamically loaded structures.
[h] Double-groove welds may have grooves of unequal depth, but the depth of the shallower groove shall be no less than one fourth of the thickness of the thinner part joined.
[i] The orientation of the two members in the joints may vary from 135° to 180° provided that the basic joint configuration (groove angle, root face, root opening) remain the same and that the design weld size is maintained.
[j] For corner and T-joints, the member orientation may be changed provided that the groove angle is maintained as specified.
[k] The orientation of the two members in the joints may vary from 45° to 135° for corner joints and 45° to 90° for T-joints provided that the basic joint configuration (groove angle, root face, root opening) remain the same and that the design weld size is maintained.
[l] For corner joints, the outside groove preparation may be in either or both members, provided the basic groove configuration is not changed and adequate edge distance is maintained to support the welding operations without excessive edge melting.
[m] Dynamic load application limits these joints to the horizontal welding position.
[n] The member orientation may be changed provided that the groove dimensions are maintained as specified.
[o] Double-groove welds may have grooves of unequal depth, provided these conform to Note E. Also, the weld size (E), less any reduction, applies individually to each groove.
[p] If fillet welds are used in statically loaded structures to reinforce groove welds in corner and T-joints, they shall be equal to $1/4T_1$, but not exceed 3/8 in [10 mm].

Copyright American Welding Society
Provided by IHS under license with AWS
No reproduction or networking permitted without license from IHS
Licensee=University of Texas Revised Sub Account/5620001114
Not for Resale, 08/29/2012 23:50:47 MDT

Butt Joint (B)
Corner Joint (C)
Square-Groove Weld (1)

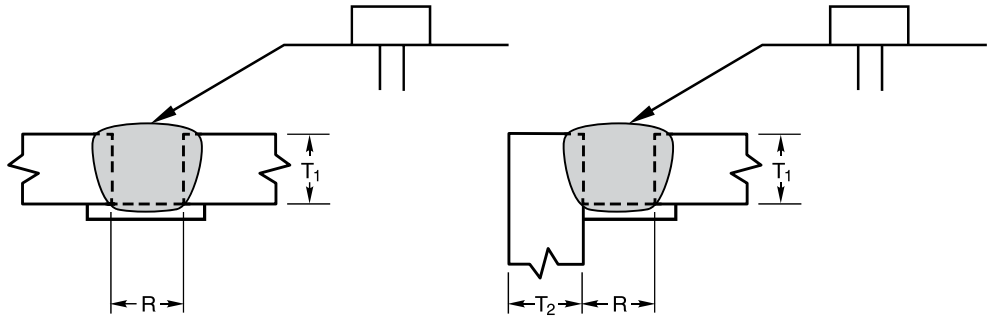

B-L1a **C-L1a**

Welding Process	Joint Designation	Base Metal Thickness, in [mm] (U = Unlimited)		Groove Preparation			Permitted Welding Positions	Gas Shielding for FCAW	Notes
					Tolerances, in [mm]				
		T_1	T_2	Root Opening (R)	As Detailed (see 4.3.3)	As Fit-Up (see Table 6)			
SMAW	B-L1a	1/4 [6] max.	—	T_1	+1/16 [2], –0	+1/4 [6], –1/16 [2]	All	—	i
	C-L1a	1/4 [6] max.	U	T_1	+1/16 [2], –0	+1/4 [6], –1/16 [2]	All	—	—
FCAW GMAW	B-L1a-GF	3/8 [10] max.	—	T_1	+1/16 [2], –0	+1/4 [6], –1/16 [2]	All	Not Required	a, i

Butt Joint (B)
Square-Groove Weld (1)

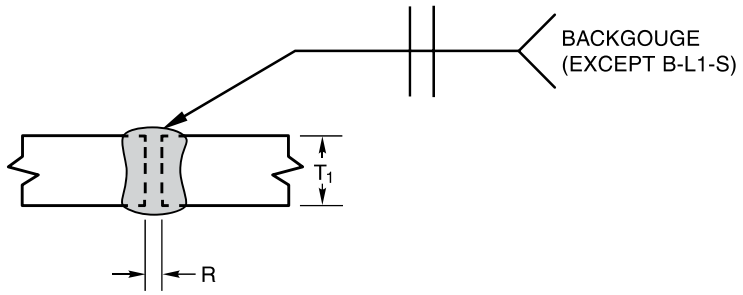

Welding Process	Joint Designation	Base Metal Thickness, in [mm] (U = Unlimited)		Groove Preparation			Permitted Welding Positions*	Gas Shielding for FCAW	Notes
					Tolerances, in [mm]				
		T_1	T_2	Root Opening (R), in [mm]	As Detailed (see 4.3.3)	As Fit-Up (see Table 6)			
SMAW	B-L1b	1/4 [6] max.	—	$\frac{T_1}{2}$	+1/16 [2], –0	+1/16 [2], –1/8 [3]	All	—	c, i
GMAW FCAW	B-L1b-GF	3/8 [10] max.	—	0 to 1/8 [3]	+1/16 [2], –0	+1/16 [2], –1/8 [3]	All	Not Required	a, c, i
SAW	B-L1-S	3/8 [10] max.	—	0	±0	+1/16 [2], –0	F	—	i
	B-L1a-S	3/8 [10] max.	—						c, i

*F = Flat.

Figure B.1—Prequalified Complete Joint Penetration Groove Welded Joints

Copyright American Welding Society
Provided by IHS under license with AWS
No reproduction or networking permitted without license from IHS
Licensee=University of Texas Revised Sub Account/5620001114
Not for Resale, 08/29/2012 23:50:47 MDT

T-Joint (T)
Corner Joint (C)
Square-Groove Weld (1)

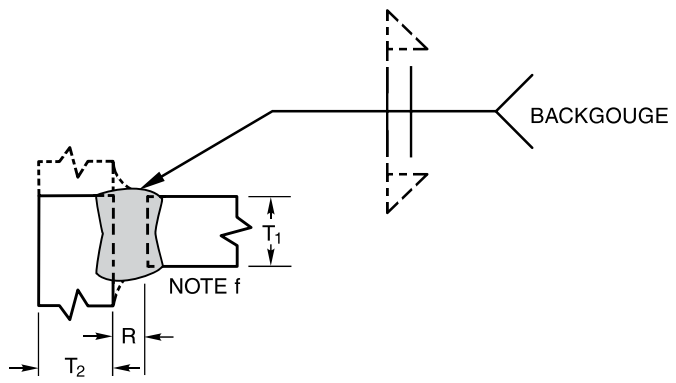

Welding Process	Joint Designation	Base Metal Thickness, in [mm] (U = Unlimited)		Groove Preparation			Permitted Welding Positions*	Gas Shielding for FCAW	Notes
					Tolerances, in [mm]				
		T_1	T_2	Root Opening (R), in [mm]	As Detailed (see 4.3.3)	As Fit-Up (see Table 6)			
SMAW	TC-L1b	1/4 [6] max.	U	$\frac{T_1}{2}$	+1/16 [2], –0	+1/16 [2], –1/8 [3]	All	—	c, f
GMAW FCAW	TC-L1-GF	3/8 [10] max.	U	0 to 1/8 [10]	+1/16 [2], –0	+1/16 [2], –1/8 [3]	All	Not Required	a, c, f
SAW	TC-L1-S	3/8 [10] max.	U	0	±0	+1/16 [2], –0	F	—	c, f

*F = Flat.

Butt Joint (B)
Single-V-Groove Weld (2)

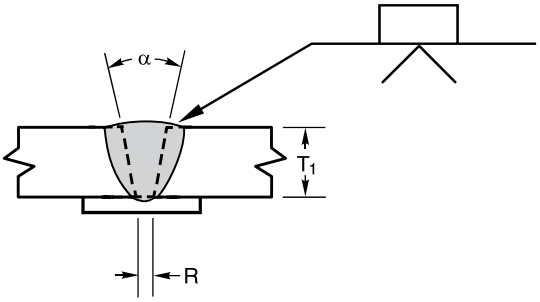

Tolerances, in [mm] for R; ° for α	
As Detailed (see 4.3.3)	As Fit-Up (see Table 6)
R = +1/16 [2], –0	+1/4 [6], –1/16 [2]
α = +10°, –0°	+10°, –5°

Welding Process	Joint Designation	Base Metal Thickness, in [mm] (U = Unlimited)		Groove Preparation		Permitted Welding Positions*	Gas Shielding for FCAW	Notes
		T_1	T_2	Root Opening (R), in [mm]	Groove Angle (α)			
SMAW	B-U2a	U	—	1/4 [6]	45°	All	—	i
				3/8 [10]	30°	F, V, OH	—	i
				1/2 [13]	20°	F, V, OH	—	i
GMAW FCAW	B-U2a-GF	U	—	3/16 [5]	30°	F, V, OH	Required	a, i
				1/4 [6]	30°	F, V, OH	Not Req.	a, i
				3/8 [10]	45°	F, V, OH	Not Req.	a, i
SAW	B-L2a-S	2 [50] max.	—	1/4 [6]	30°	F	—	i
SAW	B-U2-S	U	—	5/8 [16]	20°	F	—	i

*F = Flat, V = Vertical, OH = Overhead.

Figure B.1 (Continued)—Prequalified Complete Joint Penetration Groove Welded Joints

Copyright American Welding Society
Provided by IHS under license with AWS
No reproduction or networking permitted without license from IHS
Licensee=University of Texas Revised Sub Account/5620001114
Not for Resale, 08/29/2012 23:50:47 MDT

Corner Joint (C)
Single-V-Groove Weld (2)

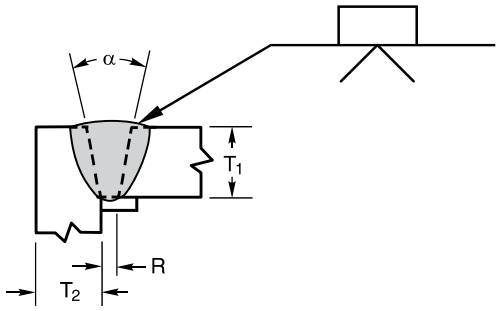

Tolerances, in [mm] for R; ° for α	
As Detailed (see 4.3.3)	As Fit-Up (see Table 6)
R = +1/16 [2], –0	+1/4 [6], –1/16 [2]
α = +10°, –0°	+10°, –5°

Welding Process	Joint Designation	Base Metal Thickness, in [mm] (U = Unlimited)		Groove Preparation		Permitted Welding Positions*	Gas Shielding for FCAW	Notes
		T_1	T_2	Root Opening (R), in [mm]	Groove Angle (α)			
SMAW	C-U2a	U	U	1/4 [6]	45°	All	—	j
				3/8 [10]	30°	F, V, OH	—	j
				1/2 [13]	20°	F, V, OH	—	j
GMAW FCAW	C-U2a-GF	U	U	3/16 [5]	30°	F, V, OH	Required	a
				3/8 [10]	30°	F, V, OH	Not Req.	a, j
				1/4 [6]	45°	F, V, OH	Not Req.	a, j
SAW	C-L2a-S	2 [25] max.	U	1/4 [6]	30°	F	—	j
SAW	C-U2-S	U	U	5/8 [16]	20°	F	—	j

*F = Flat, V = Vertical, OH = Overhead.

Butt Joint (B)
Single-V-Groove Weld (2)

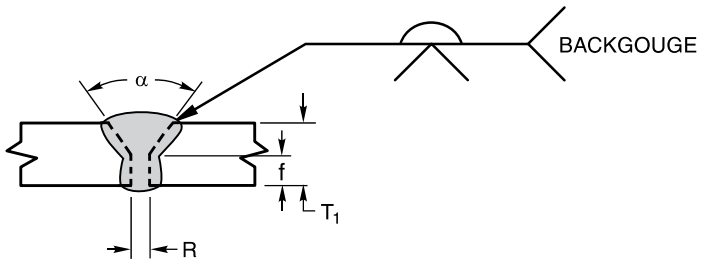

Welding Process	Joint Designation	Base Metal Thickness, in [mm] (U = Unlimited)		Groove Preparation			Permitted Welding Positions*	Gas Shielding for FCAW	Notes
				Root Opening (R), Root Face (f), in [mm] Groove Angle (α)	Tolerances				
		T_1	T_2		As Detailed (see 4.3.3)	As Fit-Up (see Table 6)			
SMAW	B-U2	U	—	R = 0 to 1/8 [3] f = 0 to 1/8 [3] α = 60°	+1/16 [2], –0 +1/16 [2], –0 + 10°, –0°	+1/16 [2], –1/8 [3] Not limited +10°, –5°	All	—	c, i
GMAW FCAW	B-U2-GF	U	—	R = 0 to 1/8 [3] f = 0 to 1/8 [3] α = 60°	+1/16 [2], –0 +1/16 [2], –0 + 10°, –0°	+1/16 [2], –1/8 [3] Not limited +10°, –5°	All	Not Required	a, c, i
SAW	B-L2c-S	Over 1/2 to 1 [13 to 25]	—	R = 0 f = 1/4 [6] max. α = 60°	R = ±0 f = +0, –f α = +10°, –0°	+1/16 [2], –0 ±1/16 [2] +10°, –5°	F	—	c, i
		Over 1 to 1-1/2 [25 to 40]	—	R = 0 f = 1/2 [13] max. α = 60°					
		Over 1-1/2 to 2 [40 to 50]	—	R = 0 f = 5/8 [16] max. α = 60°					

*F = Flat.

Figure B.1 (Continued)—Prequalified Complete Joint Penetration Groove Welded Joints

Copyright American Welding Society
Provided by IHS under license with AWS
No reproduction or networking permitted without license from IHS
Licensee=University of Texas Revised Sub Account/5620001114
Not for Resale, 08/29/2012 23:50:47 MDT

Corner Joint (C)
Single-V-Groove Weld (2)

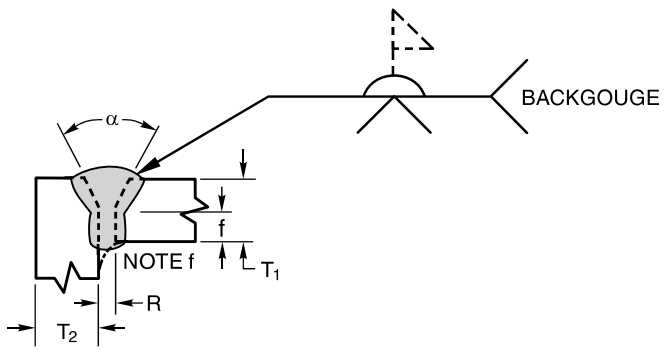

Welding Process	Joint Designation	Base Metal Thickness, in [mm] (U = Unlimited)		Groove Preparation			Permitted Welding Positions*	Gas Shielding for FCAW	Notes
				Root Opening (R), Root Face (f), in [mm] Groove Angle (α)	Tolerances, in [mm]				
		T_1	T_2		As Detailed (see 4.3.3)	As Fit-Up (see Table 6)			
SMAW	C-U2	U	U	R = 0 to 1/8 [3] f = 0 to 1/8 [3] α = 60°	+1/16 [2], –0 +1/16 [2], –0 + 10°, –0°	+1/16 [2], –1/8 [3] Not limited +10°, –5°	All	—	c, f, k
GMAW FCAW	C-U2-GF	U	U	R = 0 to 1/8 [3] f = 0 to 1/8 [3] α = 60°	+1/16 [2], –0 +1/16 [2], –0 + 10°, –0°	+1/16 [2], –1/8 [3] Not limited +10°, –5°	All	Not Required	a, c, f, r
SAW	C-U2b-S	U	U	R = 0 to 1/8 [3] f = 1/4 [6] max. α = 60°	±0 +0, –1/4 [6] +10°, –0°	+1/16 [2], –0 ±1/16 [2] +10°, –5°	F	—	c, f, k

*F = Flat.

Butt Joint (B)
Double-V-Groove Weld (3)

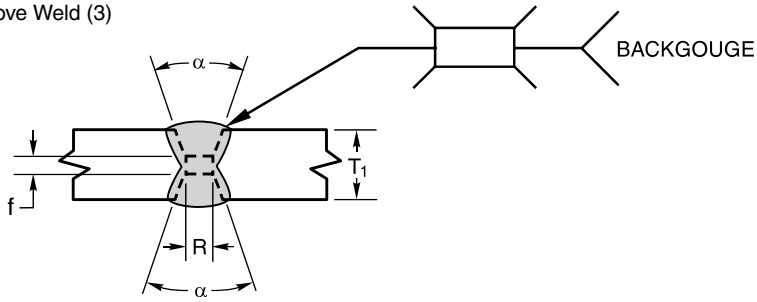

Tolerances, in [mm] for R, f, or Spacer; ° for α	
As Detailed (see 4.3.3)	As Fit-Up (see Table 6)
R = ±0	+1/4 [6], –0
f = ±0	+1/16 [2], –0
α = +10°, –0°	+10°, –5°
SAW Spacer = ±0	+1/16 [2], –0
SMAW Spacer = ±0	+1/8 [3], –0

Welding Process	Joint Designation	Base Metal Thickness, in [mm] (U = Unlimited)		Groove Preparation			Permitted Welding Positions*	Gas Shielding for FCAW	Notes
		T_1	T_2	Root Opening (R), in [mm]	Root Face (f), in [mm]	Groove Angle (α)			
SMAW	B-U3a	U Spacer = 1/8 × R	—	1/4 [6]	0 to 1/8 [3]	45°	All	—	c, h, i
				3/8 [10]	0 to 1/8 [3]	30°	F, V, OH	—	
				1/2 [13]	0 to 1/8 [3]	20°	F, V, OH	—	
SAW	B-U3a-S	U Spacer = 1/4 × R	—	5/8 [16]	0 to 1/4 [6]	20°	F	—	c, h, i

*F = Flat, V = Vertical, OH = Overhead.

Figure B.1 (Continued)—Prequalified Complete Joint Penetration Groove Welded Joints

Copyright American Welding Society
Provided by IHS under license with AWS
No reproduction or networking permitted without license from IHS
Licensee=University of Texas Revised Sub Account/5620001114
Not for Resale, 08/29/2012 23:50:47 MDT

Butt Joint (B)
Double-V-Groove Weld (3)

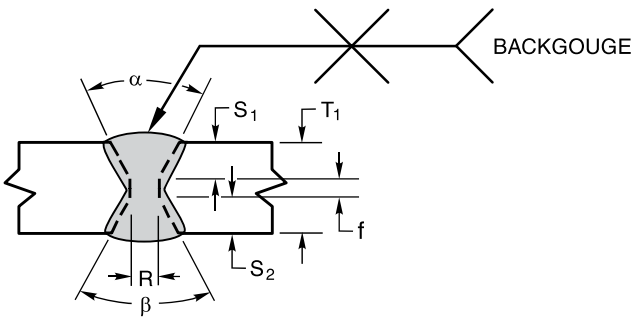

For B-U3c-S only, in [mm]	
T_1	S_1
>2 to ≤2-1/2 [>51 to ≤63]	1-3/8 [35]
>2-1/2 to ≤3 [>63 to ≤75]	1-3/4 [44]
>3 to ≤3-5/8 [>75 to ≤92]	2-1/8 [54]
>3-5/8 to ≤4 [>92 to ≤102]	2-3/8 [60]
>4 to ≤4-3/4 [>102 to ≤121]	2-3/4 [70]
>4-3/4 to ≤5-1/2 [>121 to ≤140]	3-1/4 [83]
>5-1/2 to ≤6-1/4 [>140 to ≤159]	3-3/4 [95]
For T_1 > 6-1/4 [159] or T_1 ≤ 2 [50] $S_1 = 2/3\ (T_1 - 1/4\ [6])$	

Welding Process	Joint Designation	Base Metal Thickness, in [mm] (U = Unlimited)		Groove Preparation			Permitted Welding Positions*	Gas Shielding for FCAW	Notes
				Root Opening (R), Root Face (f), in [mm] Groove Angle (α)	Tolerances, in [mm]				
		T_1	T_2		As Detailed (see 4.3.3)	As Fit-Up (see Table 6)			
SMAW	B-U3b	U preferably 5/8 [16] or thicker	—	R = 0 to 1/8 [3]	+1/16 [2], –0	+1/16 [2], –1/8 [3]	All	—	c, h, i
GMAW FCAW	B-U3-GF			f = 0 to 1/8 [3] α = β = 60°	+1/16 [2], –0 +10°, –0°	Not limited +10°, –5°	All	Not Required	a, c, h, i
SAW	B-U3c-S	U	—	R = 0 f = 1/4 [6] min. α = β = 60°	+1/16 [2], –0 +1/4 [6], –0 +10°, –0°	+1/16 [2], –0 +1/4 [6], –0 +10°, –5°	F	—	c, h, i
				To find S_1 see table above: $S_2 = T_1 - (S_1 + f)$					

*F = Flat.

Butt Joint (B)
Single-Bevel-Groove Weld (4)

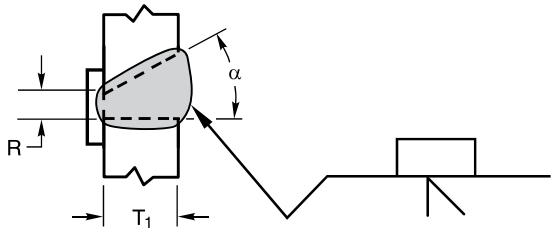

Tolerances, in [mm] for R; ° for α	
As Detailed (see 4.3.3)	As Fit-Up (see Table 6)
R = +1/16 [2], –0	+1/4 [6], –1/16 [2]
α = +10°, –0°	+10°, –5°

Welding Process	Joint Designation	Base Metal Thickness, in [mm] (U = Unlimited)		Groove Preparation		Permitted Welding Positions	Gas Shielding for FCAW	Notes
		T_1	T_2	Root Opening (R), in [mm]	Groove Angle (α)			
SMAW	B-U4a	U	—	1/4 [6]	45°	All	—	i, m
				3/8 [10]	30°	All	—	i, m
GMAW FCAW	C-U4a-GF	U	—	3/16 [5]	30°	All	Required	a, i, m
				1/4 [6]	45°	All	Not Req.	a, i, m
				3/8 [10]	30°	F	Not Req.	a, i, m

Figure B.1 (Continued)—Prequalified Complete Joint Penetration Groove Welded Joints

Copyright American Welding Society
Provided by IHS under license with AWS
No reproduction or networking permitted without license from IHS
Licensee=University of Texas Revised Sub Account/5620001114
Not for Resale, 08/29/2012 23:50:47 MDT

T- or Corner Joint (TC)
Single-Bevel-Groove Weld (4)

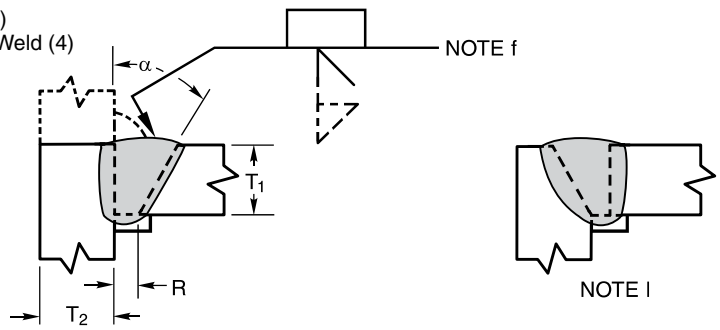

Tolerances, in [mm] for R; ° for α	
As Detailed (see 4.3.3)	As Fit-Up (see Table 6)
R = +1/16 [2], –0	+1/4 [6], –1/16 [2]
a = +10°, –0°	+10°, –5°

Welding Process	Joint Designation	Base Metal Thickness, in [mm] (U = Unlimited)		Groove Preparation		Permitted Welding Positions*	Gas Shielding for FCAW	Notes
		T_1	T_2	Root Opening (R), in [mm]	Groove Angle (α)			
SMAW	TC-U4a	U	U	1/4 [6]	45°	All	—	f, j, l
				3/8 [10]	30°	F, V, OH	—	f, j, l
GMAW FCAW	TC-U4a-GF	U	U	3/16 [5]	30°	All	Required	a, f, j, l
				3/8 [10]	30°	F	Not Req.	a, f, j, l
				1/4 [6]	45°	All	Not Req.	a, f, j, l
SAW	TC-U4a-S	U	U	3/8 [10]	30°	F	—	f, j, l
				1/4 [6]	45°			

*F = Flat, V = Vertical, OH = Overhead.

Butt Joint (B)
Single-Bevel-Groove Weld (4)

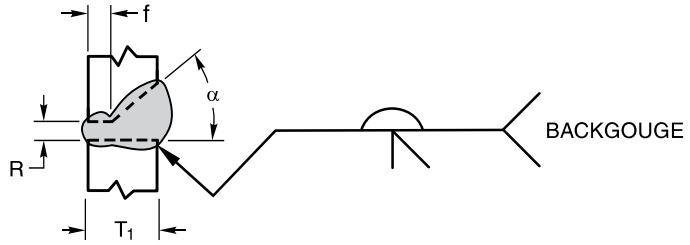

Welding Process	Joint Designation	Base Metal Thickness, in [mm] (U = Unlimited)		Groove Preparation			Permitted Welding Positions	Gas Shielding for FCAW	Notes
				Root Opening (R), Root Face (f), in [mm] Groove Angle (α)	Tolerances, in [mm]				
		T_1	T_2		As Detailed (see 4.3.3)	As Fit-Up (see Table 6)			
SMAW	B-U4b	U	—	R = 0 to 1/8 [3]	+1/16 [2], –0	+1/16 [2], –1/8 [3]	All	—	c, i, m
GMAW FCAW	B-U4b-GF	U	—	f = 0 to 1/8 [3] α = 45°	+1/16 [2], –0 +10°, –0°	Not limited 10°, –5°	All	Not Required	a, c, i, m

Figure B.1 (Continued)—Prequalified Complete Joint Penetration Groove Welded Joints

Copyright American Welding Society
Provided by IHS under license with AWS
No reproduction or networking permitted without license from IHS
Licensee=University of Texas Revised Sub Account/5620001114
Not for Resale, 08/29/2012 23:50:47 MDT

T- or Corner Joint (TC)
Single-Bevel-Groove Weld (4)

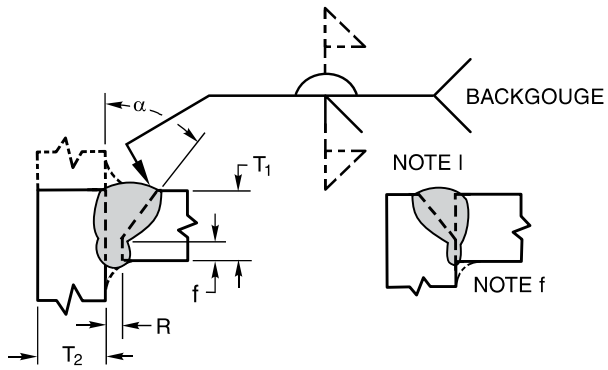

Welding Process	Joint Designation	Base Metal Thickness, in [mm] (U = Unlimited)		Groove Preparation			Permitted Welding Positions*	Gas Shielding for FCAW	Notes
				Root Opening (R), Root Face (f), in [mm] Groove Angle (α)	Tolerances, in [mm]				
		T_1	T_2		As Detailed (see 4.3.3)	As Fit-Up (see Table 6)			
SMAW	TC-U4b	U	U	R = 0 to 1/8 [3]	+1/16 [2], –0	+1/16 [2], –1/8 [3]	All	—	c, f, k, l
GMAW FCAW	TC-U4b-GF	U	U	f = 0 to 1/8 [3] α = 45°	+1/16 [2], –0 +10°, –0°	Not limited 10°, –5°	All	Not Required	a, c, f, k, l
SAW	TC-U4b-S	U	U	R = 0 f = 1/4 [6] max. α = 60°	±0 +0, –1/8 [3] +10°, –0°	+1/4 [6], –0 ±1/16 [2] 10°, –5°	F	—	c, f, k, l

*F = Flat.

Butt Joint (B)
Double-Bevel-Groove Weld (5)

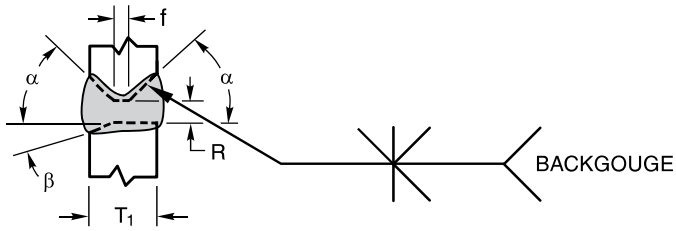

Welding Process	Joint Designation	Base Metal Thickness, in [mm] (U = Unlimited)		Groove Preparation			Permitted Welding Positions	Gas Shielding for FCAW	Notes
				Root Opening (R), Root Face (f), in [mm] Groove Angle (α)	Tolerances, in [mm]				
		T_1	T_2		As Detailed (see 4.3.3)	As Fit-Up (see Table 6)			
SMAW	B-U5a	U	—	R = 0 to 1/8 [3] f = 0 to 1/8 [3] α = 45° β = 0° to 15°	+1/16 [2], –0 +1/16 [2], –0 $\alpha + \beta^{+10°}_{-0°}$	+1/16 [2], –1/8 [3] Not limited $\alpha + \beta^{+10°}_{-5°}$	All	—	c, h, i, m
GMAW FCAW	B-U5-GF	U	—	R = 0 to 1/8 [3] f = 0 to 1/8 [3] α = 45° β = 0° to 15°	+1/16 [2], –0 +1/16 [2], –0 α + β = +10°, –0°	+1/16 [2], –1/8 [3] Not limited α + β = +10°, –5°	All	Not Required	a, c, h, i, m

Figure B.1 (Continued)—Prequalified Complete Joint Penetration Groove Welded Joints

Copyright American Welding Society
Provided by IHS under license with AWS
No reproduction or networking permitted without license from IHS
Licensee=University of Texas Revised Sub Account/5620001114
Not for Resale, 08/29/2012 23:50:47 MDT

T- or Corner Joint (TC)
Double-Bevel-Groove Weld (5)

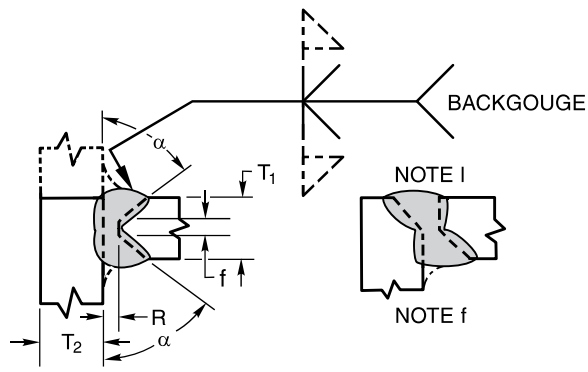

Welding Process	Joint Designation	Base Metal Thickness, in [mm] (U = Unlimited)		Groove Preparation			Permitted Welding Positions*	Gas Shielding for FCAW	Notes
		T_1	T_2	Root Opening (R), Root Face (f), in [mm] Groove Angle (α)	Tolerances, in [mm] for R and f; ° for α: As Detailed (see 4.3.3)	Tolerances, in [mm] for R and f; ° for α: As Fit-Up (see Table 6)			
SMAW	TC-U5b	U	U	R = 0 to 1/8 [3]	+1/16 [2], –0	+1/16 [2], –1/8 [3]	All	—	c, f, h, k, l
GMAW FCAW	TC-U5-GF	U	U	f = 0 to 1/8 [3] α = 45°	+1/16 [2], –0 + 10°, –0°	Not limited +10°, –5°	All	Not Required	a, c, f, h, k, l
SAW	TC-U5-S	U	U	R = 0 f = 3/16 [5] max. α = 60°	±0 +0, –3/16 [5] +10°, –0°	+1/16 [2], –0 ±1/16 [2] +10°, –5°	F	—	c, f, h, k, l

*F = Flat.

Butt Joint (B)
T- or Corner Joint (TC)
Double-Bevel-Groove Weld (5)

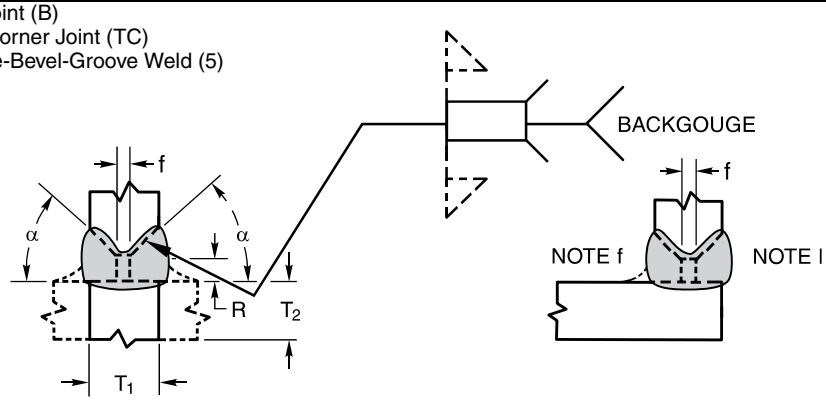

Tolerances, in [mm] for R, f, and Spacer; ° for α	
As Detailed (see 4.3.3)	As Fit-Up (see Table 6)
R = ±0	+1/4 [6], –0
f = +1/16 [2], –0	±1/16
α = +10°, –0°	+10°, –5°
Spacer = +1/16 [2], –0	+1/8, –0

Welding Process	Joint Designation	Base Metal Thickness, in [mm] (U = Unlimited)		Groove Preparation			Permitted Welding Positions*	Gas Shielding for FCAW	Notes
		T_1	T_2	Root Opening (R), in [mm]	Root Face (f), in [mm]	Groove Angle (α)			
SMAW	B-U5b	U Spacer = 1/8 × R	U	1/4 [6]	0 to 1/8 [3]	45°	All	—	c, h, i, m
	TC-U5a	U Spacer = 1/4 × R	U	1/4 [6]	0 to 1/8 [3]	45°	All	—	c, f, h, k, l
				3/8 [10]	0 to 1/8 [3]	30°	F, OH	—	c, f, h, k, l

*F = Flat, OH = Overhead.

Figure B.1 (Continued)—Prequalified Complete Joint Penetration Groove Welded Joints

Copyright American Welding Society
Provided by IHS under license with AWS
No reproduction or networking permitted without license from IHS
Licensee=University of Texas Revised Sub Account/5620001114
Not for Resale, 08/29/2012 23:50:47 MDT

Butt Joint (B)
Corner Joint (C)
Single-U-Groove Weld (6)

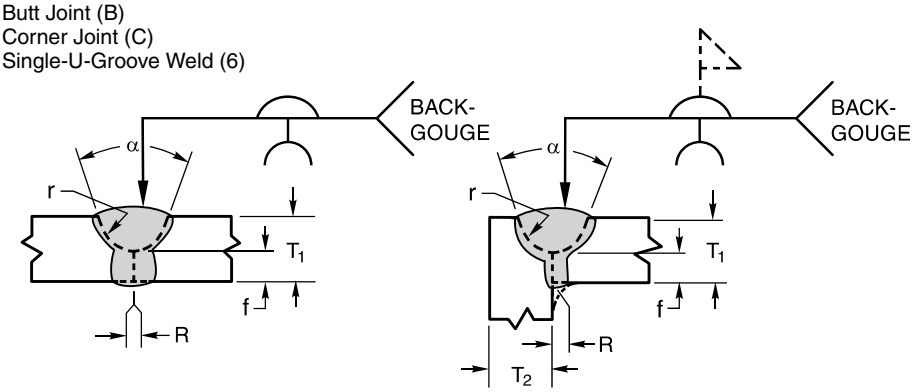

Tolerances, in [mm] for R, f, and r; ° for α	
As Detailed (see 4.3.3)	As Fit-Up (see Table 6)
R = +1/16 [2], –0	+1/16 [2], –1/8 [3]
f = ±1/16 [2]	Not Limited
r = +1/8 [3], –0	+1/8 [3], –0
α = +10°, –0°	+10°, –5°

GROOVE RADIUS (r) = 1/4 in [6 mm] FOR ALL

Welding Process	Joint Designation	Base Metal Thickness, in [mm] (U = Unlimited)		Groove Preparation			Permitted Welding Positions*	Gas Shielding for FCAW	Notes
		T_1	T_2	Root Opening (R), in [mm]	Root Face (f), in [mm]	Groove Angle (α)			
SMAW	B-U6	U	U	0 to 1/8 [3]	1/8 [3]	45°	All	—	c, i
				0 to 1/8 [3]	1/8 [3]	20°	F, OH	—	c, i
	C-U6	U	U	0 to 1/8 [3]	1/8 [3]	45°	All	—	c, f, k
				0 to 1/8 [3]	1/8 [3]	20°	F, OH	—	c, f, k
GMAW FCAW	B-U6-GF	U	U	0 to 1/8 [3]	1/8 [3]	20°	All	Not Req.	a, c, i
	C-U6-GF	U	U	0 to 1/8 [3]	1/8 [3]	20°	All	Not Req.	a, c, f, k

*F = Flat, OH = Overhead.

Butt Joint (B)
Double-U-Groove Weld (7)

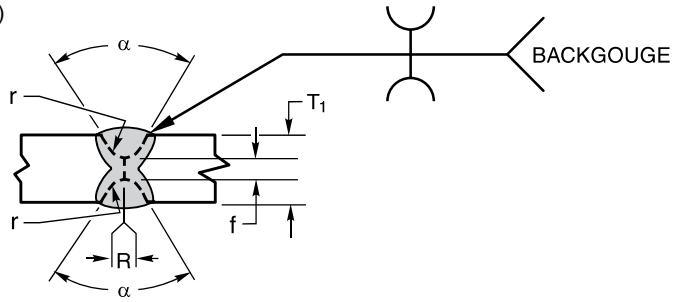

Tolerances, in [mm] for R, f, and r; ° for α	
As Detailed (see 4.3.3)	As Fit-Up (see Table 6)
For B-U7 and B-U7-GF	
R = +1/16 [2], –0	+1/16 [2], –1/8 [3]
f = ±1/16 [2], –0	Not Limited
r = +1/4 [6], –0	±1/16 [2]
α = +10°, –0°	+10°, –5°
For B-U7-S	
R = ±0	+1/16 [2], –0
f = +0, –1/4 [6]	±1/16 [2]

GROOVE RADIUS (r) = 1/4 in [6 mm] FOR ALL

Welding Process	Joint Designation	Base Metal Thickness, in [mm] (U = Unlimited)		Groove Preparation			Permitted Welding Positions*	Gas Shielding for FCAW	Notes
		T_1	T_2	Root Opening (R), in [mm]	Root Face (f), in [mm]	Groove Angle (α)			
SMAW	B-U7	U	—	0 to 1/8 [3]	1/8 [3]	45°	All	—	c, h, i
				0 to 1/8 [3]	1/8 [3]	20°	F, OH	—	c, h, i
GMAW FCAW	B-U7-GF	U	—	0 to 1/8 [3]	1/8 [3]	20°	All	Not Required	a, c, h, i
SAW	B-U7-S	U	—	0	1/4 [6] max.	20°	F	—	c, h, i

*F = Flat, OH = Overhead.

Figure B.1 (Continued)—Prequalified Complete Joint Penetration Groove Welded Joints

Copyright American Welding Society
Provided by IHS under license with AWS
No reproduction or networking permitted without license from IHS
Licensee=University of Texas Revised Sub Account/5620001114
Not for Resale, 08/29/2012 23:50:47 MDT

Butt Joint (B)
Single-J-Groove Weld (8)

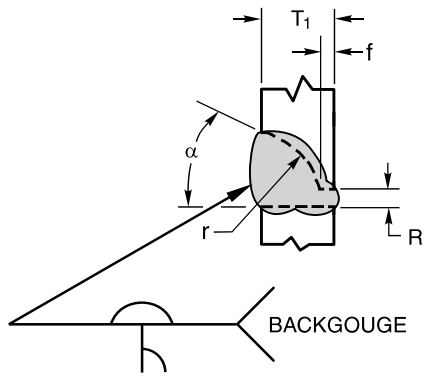

GROOVE RADIUS (r) = 3/8 in [10 mm] FOR ALL

Tolerances, in [mm] for R, f, and r; ° for α	
As Detailed (see 4.3.3)	As Fit-Up (see Table 6)
R = +1/16 [2], –0	+1/16 [2], –1/8 [3]
f = +1/16 [2], –0	Not Limited
r = +1/4 [6], –0	±1/16 [2]
α = +10°, –0°	+10°, –5°

Welding Process	Joint Designation	Base Metal Thickness, in [mm] (U = Unlimited)		Groove Preparation			Permitted Welding Positions	Gas Shielding for FCAW	Notes
		T_1	T_2	Root Opening (R), in [mm]	Root Face (f), in [mm]	Groove Angle (α)			
SMAW	B-U8	U	—	0 to 1/8 [3]	1/8 [3]	45°	All	—	c, i, m
GMAW FCAW	B-U8-GF	U	—	0 to 1/8 [3]	1/8 [3]	30°	All	Not Req.	a, c, i, m

T- or Corner Joint (TC)
Single-J-Groove Weld (8)

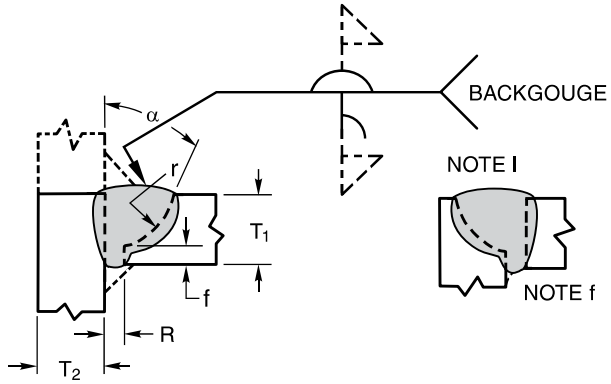

GROOVE RADIUS (r) = 3/8 in [10 mm] FOR ALL

Tolerances, in [mm] for R, f, and r; ° for α	
As Detailed (see 4.3.3)	As Fit-Up (see Table 6)
R = +1/16 [2], –0	+1/16 [2], –1/8 [3]
f = +1/16 [2], –0	Not Limited
r = +1/4 [6], –0	±1/16 [2]
α = +10°, –0°	+10°, –5°

Welding Process	Joint Designation	Base Metal Thickness, in [mm] (U = Unlimited)		Groove Preparation			Permitted Welding Positions*	Gas Shielding for FCAW	Notes
		T_1	T_2	Root Opening (R), in [mm]	Root Face (f), in [mm]	Groove Angle (α)			
SMAW	TC-U8a	U	U	0 to 1/8 [3]	1/8 [3]	45°	All	—	c, f, k, l
				0 to 1/8 [3]	1/8 [3]	30°	F, OH	—	
GMAW FCAW	TC-U8a-GF	U	U	0 to 1/8 [3]	1/8 [3]	30°	All	Not Required	a, c, f, k, l

*F = Flat, OH = Overhead.

Figure B.1 (Continued)—Prequalified Complete Joint Penetration Groove Welded Joints

Copyright American Welding Society
Provided by IHS under license with AWS
No reproduction or networking permitted without license from IHS
Licensee=University of Texas Revised Sub Account/5620001114
Not for Resale, 08/29/2012 23:50:47 MDT

Butt Joint (B)
Partial Joint Penetration (P)
Square-Groove Weld (1)

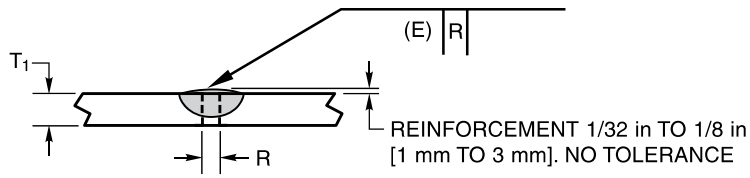

Welding Process	Joint Designation	Base Metal Thickness, in [mm]		Groove Preparation			Permitted Welding Positions	Weld Size (E), in [mm]	Notes
					Tolerances, in [mm]				
		T_1	T_2	Root Opening (R), in [mm]	As Detailed (see 4.3.3)	As Fit-Up (see Table 6)			
SMAW	B-P1a	1/8 [3]	—	0 to 1/16 [2]	+1/16 [2], –0	±1/16 [2]	All	T_1 – 1/32 [1]	b, d
	B-P1c	1/4 [6] max.	—	$\frac{T_1}{2}$ min.	+1/16 [2], –0	±1/16 [2]	All	$\frac{T_1}{2}$	b, d

Butt Joint (B)
Partial Joint Penetration (P)
Square-Groove Weld (1)

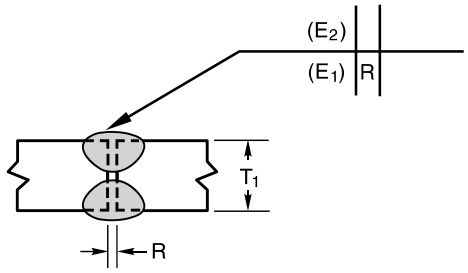

$E_1 + E_2$ SHALL NOT EXCEED $\frac{3T_1}{4}$

Welding Process	Joint Designation	Base Metal Thickness, in [mm]		Groove Preparation			Permitted Welding Positions	Total Weld Size, in [mm] ($E_1 + E_2$)	Notes
					Tolerances, in [mm]				
		T_1	T_2	Root Opening (R)	As Detailed (see 4.3.3)	As Fit-Up (see Table 6)			
SMAW	B-P1b	1/4 [6] max.	—	$\frac{T_1}{2}$	+1/16 [2], –0	±1/16 [2]	All	$\frac{3T_1}{4}$	d

Figure B.2—Prequalified Partial Joint Penetration Groove Welded Joints

Copyright American Welding Society
Provided by IHS under license with AWS
No reproduction or networking permitted without license from IHS
Licensee=University of Texas Revised Sub Account/5620001114
Not for Resale, 08/29/2012 23:50:47 MDT

Butt or Corner Joint (BC)
Partial Joint Penetration (P)
Single-V-Groove Weld (2)

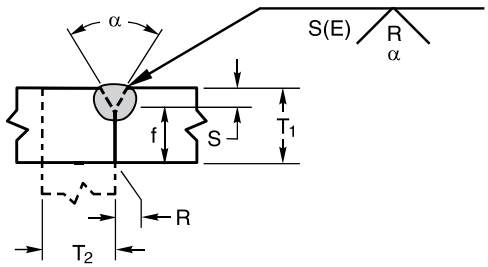

Welding Process	Joint Designation	Base Metal Thickness, in [mm] (U = Unlimited)		Groove Preparation			Permitted Welding Positions*	Weld Size (E), in [mm]	Notes
				Root Opening (R), Root Face (f), in [mm] Groove Angle (α)	Tolerances, in [mm] for R and f; ° for α				
		T_1	T_2		As Detailed (see 4.3.3)	As Fit-Up (see Table 6)			
SMAW	BC-P2	1/4 [6] max.	—	R = 0 f = 1/8 [3] min. α = 60°	±1/16 [2] ±1/16 [2] +10°, –0°	±1/16 [2] ±1/16 [2] +10°, –5°	All	T_1	b, e, n
GMAW FCAW	BC-P2-GF	1/4 [6] min.	U	R = 0 f = 1/8 [3] min. α = 60°	±0 ±1/16 [2] +10°, –0°	+1/16 [2], –0 ±1/16 [2] +10°, –5°	All	S	a, b, e, n
SAW	BC-P2-S	7/16 [11] min.	U	R = 0 f = 1/4 [6] min. α = 60°	±0 ±1/16 [2] +10°, –0°	+1/16 [2], –0 ±1/16 [2] +10°, –5°	F	S	b, e, n

*F = Flat.

Butt Joint (B)
Partial Joint Penetration (P)
Double-V-Groove Weld (3)

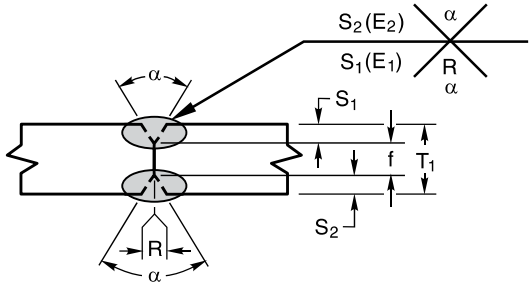

Welding Process	Joint Designation	Base Metal Thickness, in [mm]		Groove Preparation			Permitted Welding Positions*	Weld Size (E), in [mm]	Notes
				Root Opening (R), Root Face (f), in [mm] Groove Angle (α)	Tolerances in [mm] for R and f; ° for α				
		T_1	T_2		As Detailed (see 4.3.3)	As Fit-Up (see Table 6)			
SMAW	B-P3	1/2 [13] min.	—	R = 0 f = 1/8 [3] min. α = 60°	+1/16 [2], –0 –0 +10°, –0°	±1/16 [2] ±1/16 [2] +10°, –5°	All	$S_1 + S_2$	e, o
GMAW FCAW	B-P3-GF	1/2 [13] min.	—	R = 0 f = 1/8 [3] min. α = 60°	+1/16 [2], –0 –0 +10°, –0°	±1/16 [2] ±1/16 [2] +10°, –5°	All	$S_1 + S_2$	a, e, o
SAW	B-P3-S	3/4 [20] min.	—	R = 0 f = 1/4 [6] min. α = 60°	±0 –0 +10°, –0°	+3/16 [5], –0 ±1/16 [2] +10°, –5°	F	$S_1 + S_2$	e, o

*F = Flat.

Figure B.2 (Continued)—Prequalified Partial Joint Penetration Groove Welded Joints

Copyright American Welding Society
Provided by IHS under license with AWS
No reproduction or networking permitted without license from IHS
Licensee=University of Texas Revised Sub Account/5620001114
Not for Resale, 08/29/2012 23:50:47 MDT

Butt, T-, or Corner Joint (BTC)
Partial Joint Penetration (P)
Single-Bevel-Groove (4)

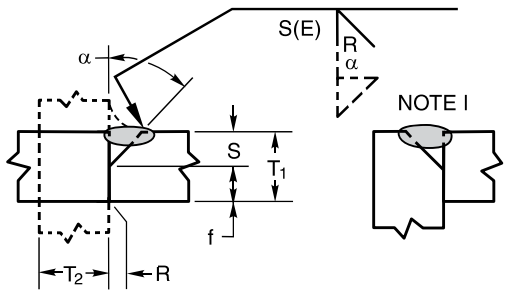

Welding Process	Joint Designation	Base Metal Thickness, in [mm] (U = Unlimited)		Groove Preparation			Permitted Welding Positions*	Weld Size (E), in [mm]	Notes
				Root Opening (R), Root Face (f), in [mm] Groove Angle (α)	Tolerances, in [mm] for R and f; ° for α				
		T_1	T_2		As Detailed (see 4.3.3)	As Fit-Up (see Table 6)			
SMAW	BTC-P4	U	U	R = 0 f = 1/8 [3] min. α = 45°	+1/16 [2], –0 –0 +10°, –0°	±1/16 [2] ±1/16 [2] +10°, –5°	All	S	b, e, l, n, p
GMAW FCAW	BTC-P4-GF	1/4 [6] min.	U	R = 0 f = 1/8 [3] min. α = 45°	+1/16 [2], –0 –0 +10°, –0°	±1/16 [2] ±1/16 [2] +10°, –5°	F, H V, OH	S S–1/8 [3]	a, b, e, l, n, p
SAW	TC-P4-S	7/16 [11] min.	U	R = 0 f = 1/4 [6] min. α = 60°	±0 –0 +10°, –0°	+3/16, –0 ±1/16 [2] +10°, –5°	F	S	b, e, l, n, p

*F = Flat, H = Horizontal, V = Vertical, OH = Overhead.

Figure B.2 (Continued)—Prequalified Partial Joint Penetration Groove Welded Joints

Copyright American Welding Society
Provided by IHS under license with AWS
No reproduction or networking permitted without license from IHS
Licensee=University of Texas Revised Sub Account/5620001114
Not for Resale, 08/29/2012 23:50:47 MDT

Butt, T-, or Corner Joint (BTC)
Partial Joint Penetration (P)
Double-Bevel-Groove Weld (5)

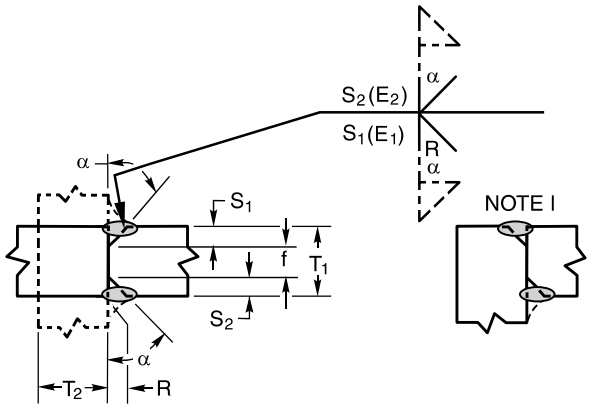

Welding Process	Joint Designation	Base Metal Thickness, in [mm] (U = Unlimited)		Groove Preparation			Permitted Welding Positions*	Weld Size (E), in [mm]	Notes
				Root Opening (R), Root Face (f), in [mm] Groove Angle (α)	Tolerances, in [mm] for R and f; ° for α				
		T_1	T_2		As Detailed (see 4.3.3)	As Fit-Up (see Table 6)			
SMAW	BTC-P5	3/4 [20] min.	U	R = 0 f = 1/8 [3] min. α = 45°	+1/16 [2], –0 U + 10°, –0°	+1/8 [3], –1/16 [2] ±1/16 [2] +10°, –5°	All	(S_1 + S_2) –1/4 [6]	e, g, l, n, o, p
GMAW FCAW	BTC-P5-GF	1/2 [13] min.	U	R = 0 f = 1/8 [3] min. α = 45°	+1/16 [2], –0 U +10°, –0°	+1/8 [3], –1/16 [2] ±1/16 [2] +10°, –5°	F, H	S_1 + S_2	a, e, g, l, n, o, p
							V, OH	(S_1 + S_2) –1/4 [6]	
SAW	TC-P5-S	3/4 [20] min.	U	R = 0 f = 1/4 [6] min. α = 60°	±0 +U, –0 +10°, –0°	+3/16 [5], –0 ±1/16 [2] +10°, –5°	F	S_1 + S_2	e, g, l, n, o, p

*F = Flat, H = Horizontal, V = Vertical, OH = Overhead.

Figure B.2 (Continued)—Prequalified Partial Joint Penetration Groove Welded Joints

Copyright American Welding Society
Provided by IHS under license with AWS
No reproduction or networking permitted without license from IHS
Licensee=University of Texas Revised Sub Account/5620001114
Not for Resale, 08/29/2012 23:50:47 MDT

Butt or Corner Joint (BC)
Partial Joint Penetration (P)
Single-U-Groove Weld (6)

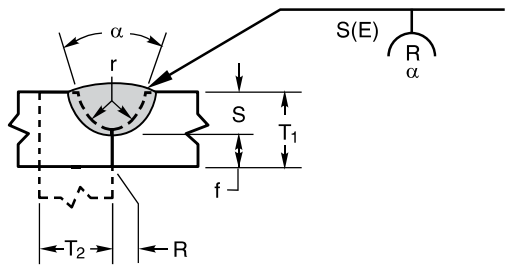

Welding Process	Joint Designation	Base Metal Thickness, in [mm] (U = Unlimited)		Groove Preparation: Root Opening (R), Root Face (f), Groove Radius (r), in [mm] Groove Angle (α)	Groove Preparation: Tolerances, in [mm] for R, f, and r; ° for α		Permitted Welding Positions*	Weld Size (E), in [mm]	Notes
		T_1	T_2		As Detailed (see 4.3.3)	As Fit-Up (see Table 6)			
SMAW	BC-P6	1/4 [6] min.	U	R = 0 f = 1/32 [1] min. r = 1/4 [6] α = 45°	+1/16 [2], –0 –0 +1/4 [6], –0 + 10°, –0°	+1/8 [3], –1/16 [2] ±1/16 [2] ±1/16 [2] +10°, –5°	All	S	b, e, n
GMAW FCAW	BC-P6-GF	1/4 [6] min.	U	R = 0 f = 1/8 [3] min. r = 1/4 [6] α = 20°	+1/16 [2], –0 –0 +1/4 [6], –0 + 10°, –0°	+1/8 [3], –1/16 [2] ±1/16 [2] ±1/16 [2] +10°, –5°	All	S	a, b, e, n
SAW	BC-P6-S	7/16 [11] min.	U	R = 0 f = 1/4 [6] min. r = 1/4 [6] α = 20°	±0 –0 +1/4 [6], –0 +10°, –0°	+1/16 [2], –0 ±1/16 [2] ±1/16 [2] +10°, –5°	F	S	b, e, n

*F = Flat.

Figure B.2 (Continued)—Prequalified Partial Joint Penetration Groove Welded Joints

Copyright American Welding Society
Provided by IHS under license with AWS
No reproduction or networking permitted without license from IHS
Licensee=University of Texas Revised Sub Account/5620001114
Not for Resale, 08/29/2012 23:50:47 MDT

Butt Joint (B)
Partial Joint Penetration (P)
Double-U-Groove Weld (7)

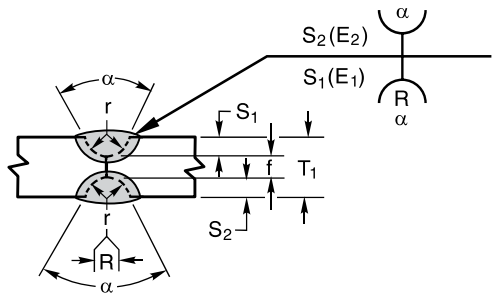

Welding Process	Joint Designation	Base Metal Thickness, in [mm] (U = Unlimited)		Groove Preparation			Permitted Welding Positions*	Weld Size (E), in [mm]	Notes
				Root Opening (R), Root Face (f), Groove Radius (r), in [mm] Groove Angle (α)	Tolerances, in [mm] for R, f, and r; ° for α				
		T_1	T_2		As Detailed (see 4.3.3)	As Fit-Up (see Table 6)			
SMAW	B-P7	1/2 [13] min. (5/8 [16] min. for dynamically loaded applications)	—	R = 0 f = 1/8 [3] min. r = 1/4 [6] α = 45°	+1/16 [2], –0 –0 +1/4 [6], –0 + 10°, –0°	+1/8 [3], –1/16 [2] ±1/16 [2] ±1/16 [2] +10°, –5°	All	$S_1 + S_2$	e, o
GMAW FCAW	B-P7-GF	1/2 [13] min. (5/8 [16] min. for dynamically loaded applications)	—	R = 0 f = 1/8 [3] min. r = 1/4 [6] α = 20°	+1/16 [2], –0 –0 +1/4 [6], –0 + 10°, –0°	+1/8 [3], –1/16 [2] ±1/16 [2] ±1/16 [2] +10°, –5°	All	$S_1 + S_2$	a, e, o
SAW	B-P7-S	3/4 [20] min. (7/8 [22] min. for dynamically loaded applications)	—	R = 0 f = 1/4 [6] min. r = 1/4 [6] α = 20°	±0 –0 +1/4 [6], –0 +10°, –0°	+1/16 [2], –0 ±1/16 [2] ±1/16 [2] +10°, –5°	F	$S_1 + S_2$	e, o

*F = Flat.

Figure B.2 (Continued)—Prequalified Partial Joint Penetration Groove Welded Joints

Copyright American Welding Society
Provided by IHS under license with AWS
No reproduction or networking permitted without license from IHS
Licensee=University of Texas Revised Sub Account/5620001114
Not for Resale, 08/29/2012 23:50:47 MDT

Butt or Corner Joint (BC)
T- or Corner Joint (TC)
Corner Joint (C)
Partial Joint Penetration (P)
Single-J-Groove Weld (8)

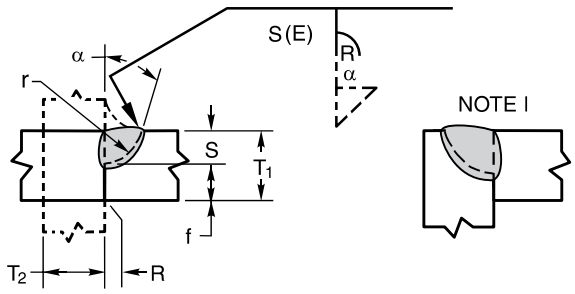

Welding Process	Joint Designation	Base Metal Thickness, in [mm] (U = Unlimited)		Groove Preparation			Permitted Welding Positions*	Weld Size (E), in [mm]	Notes
				Root Opening (R), Root Face (f), Groove Radius (r), in [mm] Groove Angle (α)	Tolerances, in [mm] for R, f, and r; ° for α				
		T_1	T_2		As Detailed (see 4.3.3)	As Fit-Up (see Table 6)			
SMAW	TC-P8 (T- and Inside Corner Joints)	1/4 [6] min.	U	R = 0 f = 1/8 [3] min. r = 3/8 [10] α = 45°	+1/16 [2], –0 +U, –0 +1/4 [6], –0 +10°, –0°	+1/8 [3], –1/16 [2] ±1/16 [2] ±1/16 [2] +10°, –5°	All	S	e, l, n, p
	BC-P8 (Butt and Outside Corner Joints)	1/4 [6] min.	U	R = 0 f = 1/8 [3] min. r = 3/8 [10] α = 30°	+1/16 [2], –0 +U, –0 +1/4 [6], –0 +10°, –0°	+1/8 [3], –1/16 [2] ±1/16 [2] ±1/16 [2] +10°, –5°	All	S	
GMAW FCAW	TC-P8-GF (T- and Inside Corner Joints)	1/4 [6] min.	U	R = 0 f = 1/8 [3] min. r = 3/8 [10] α = 45°	+1/16 [2], –0 +U, –0 +1/4 [6], –0 +10°, –0°	+1/8 [3], –1/16 [2] ±1/16 [2] ±1/16 [2] +10°, –5°	All	S	a, e, l, n, p
	BC-P8-GF (Butt and Outside Corner Joints)	1/4 [6] min.	U	R = 0 f = 1/8 [3] min. r = 3/8 [10] α = 30°	+1/16 [2], –0 +U, –0 +1/4 [6], –0 +10°, –0°	+1/8 [3], –1/16 [2] ±1/16 [2] ±1/16 [2] +10°, –5°	All	S	
SAW	TC-P8-S (T- and Inside Corner Joints)	7/16 [11] min.	U	R = 0 f = 1/4 [6] min. r = 1/2 [13] α = 45°	±0 +U, –0 +1/4 [6], –0 +10°, –0°	+1/16 [2], –0 ±1/16 [2] ±1/16 [2] +10°, –5°	F	S	e, l, n, p
	C-P8-S (Outside Corner Joints)	7/16 [11] min.	U	R = 0 f = 1/4 [6] min. r = 1/2 [13] α = 20°	±0 +U, –0 +1/4 [6], –0 +10°, –0°	+1/16 [2], –0 ±1/16 [2] ±1/16 [2] +10°, –5°	F	S	

*F = Flat.

Figure B.2 (Continued)—Prequalified Partial Joint Penetration Groove Welded Joints

Copyright American Welding Society
Provided by IHS under license with AWS
No reproduction or networking permitted without license from IHS
Licensee=University of Texas Revised Sub Account/5620001114
Not for Resale, 08/29/2012 23:50:47 MDT

Butt, T-, or Corner Joint (BTC)
Corner Joint (C)
T-Joint (T)
Partial Joint Penetration (P)
Double-J-Groove Weld (9)

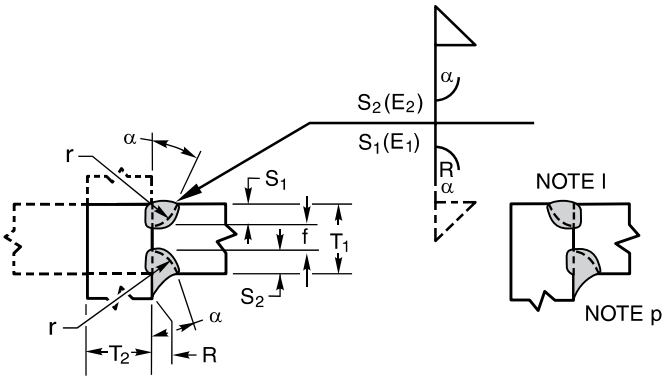

Welding Process	Joint Designation	Base Metal Thickness, in [mm] (U = Unlimited)		Groove Preparation: Root Opening (R), Root Face (f), Groove Radius (r), in [mm] Groove Angle (α)	Groove Preparation: Tolerances, in [mm] for R, f, and r; ° for α		Permitted Welding Positions*	Weld Size (E), in [mm]	Notes
		T_1	T_2		As Detailed (see 4.3.3)	As Fit-Up (see Table 6)			
SMAW	BTC-P9 (Butt, T-, and Inside Corner Joints)	1/2 [13] min.	U	R = 0 f = 1/8 [3] min. r = 3/8 [10] α = 45°	+1/16 [2], –0 +U, –0 +1/4 [6], –0 +10°, –0°	+1/8 [3], –1/16 [2] ±1/16 [2] ±1/16 [2] +10°, –5°	All	$S_1 + S_2$	e, l, n, o, p
GMAW FCAW	BTC-P9-GF (Butt, T-, and Outside Corner Joints)	1/2 [13] min.	U	R = 0 f = 1/8 [3] min. r = 3/8 [10] α = 30°	+1/16 [2], –0 +U, –0 +1/4 [6], –0 +10°, –0°	+1/8 [3], –1/16 [2] ±1/16 [2] ±1/16 [2] +10°, –5°	All	$S_1 + S_2$	a, e, l, n, o, p
SAW	C-P9-S (Inside Corner Joints)	3/4 [20] min.	U	R = 0 f = 1/4 [6] min. r = 1/2 [13] α = 45°	±0 +U, –0 +1/4 [6], –0 +10°, –0°	+1/16 [2], –0 ±1/16 [2] ±1/16 [2] +10°, –5°	F	$S_1 + S_2$	e, l, n, o, p
	C-P9-S (Outside Corner Joints)	3/4 [20] min.	U	R = 0 f = 1/4 [6] min. r = 1/2 [13] α = 20°	±0 +U, –0 +1/4 [6], –0 +10°, –0°	+1/16 [2], –0 ±1/16 [2] ±1/16 [2] +10°, –5°	F	$S_1 + S_2$	
	T-P9-S	3/4 [20] min.	U	R = 0 f = 1/4 [6] min. r = 1/2 [13] α = 45°	±0 +U, –0 +1/4 [6], –0 +10°, –0°	+1/16 [2], –0 ±1/16 [2] ±1/16 [2] +10°, –5°	F	$S_1 + S_2$	e, n, o, p

*F = Flat.

Figure B.2 (Continued)—Prequalified Partial Joint Penetration Groove Welded Joints

Copyright American Welding Society
Provided by IHS under license with AWS
No reproduction or networking permitted without license from IHS
Licensee=University of Texas Revised Sub Account/5620001114
Not for Resale, 08/29/2012 23:50:47 MDT

This page is intentionally blank.

Copyright American Welding Society
Provided by IHS under license with AWS
No reproduction or networking permitted without license from IHS
Licensee=University of Texas Revised Sub Account/5620001114
Not for Resale, 08/29/2012 23:50:47 MDT

Annex C (Normative)
Design Guide

This annex is part of AWS D14.5/D14.5M:2009, *Specification for Welding of Presses and Press Components*, and includes mandatory elements for use with this standard.

C1. Load-Carrying Cross Section

The load-carrying weld cross section that shall be used for calculating stresses is described in Clause 6, Weld Joint Design.

C2. Base-Metal Limitations

The provisions of Annex C are intended for use with steels satisfying the requirements of 2.2.1.1.

C3. Static Stresses

C3.1 In Figures C.1(A) and C.1(B), complete joint penetration groove welds are illustrated. There are considered full-strength welds, since they are capable of transferring the full strength of the members they connect. In calculations, such welds are allowed the same stress as the plate, provided the proper strength level of weld metal is used. In such complete joint penetration welds, the mechanical properties of the weld metal shall at least match the properties of the base metal. If the plates joined are of different properties, the weld metal shall at least match the plate with the lowest properties.

C3.2 Figures C.1(C) through C.1(F) illustrate partial joint penetration groove welds, which are widely used in the economical welding of very heavy plate. A partial joint penetration weld in heavy material will save both weld materials and welding time. This weld will also provide the required strength. Because of faster cooling and increased restraint, a minimum effective throat, as shown in Table C.2, should be used to minimize weld cracks. Table C.5 gives the double fillet weld size to develop full static strength of a plate.

C3.3 Weld metal subjected to compression in any direction, or tension parallel to the axis of the weld, as shown in Figures C.1(C) and C.1(D), shall have the same allowable as the base material.

C3.4 The existence of tensile forces transverse to the axis of the weld or shear forces in any direction, as shown in Figures C.1(E) and C.1(F), requires the use of weld metal whose allowable stress is the same as those used for fillet welds. The selected weld metal may have mechanical properties higher or lower than those of materials to be joined.

If the weld metal has higher mechanical properties than the materials to be joined, the allowable weld stress will be that of the lower strength base metal.

C3.5 Allowable Static Stress

C3.5.1 AWS has established the allowable shear value for weld metal in a fillet or partial penetration bevel-groove weld at $\tau = 30\%$ of the electrode minimum specified tensile strength.

Table C.1 presents the allowable shear stress values for various weld metal strength levels and the more common fillet weld sizes. These values are for equal leg fillet welds where the effective throat equals 0.707 times leg size (ω). With the table, one can calculate the allowable unit force (f) per linear inch for a weld size made with a particular electrode type. For example, calculating the allowable unit force (f) per inch for the 1/2 in fillet weld made with an E70XX electrode:

$$
\begin{aligned}
f &= 0.707 - \omega\tau \\
&= 0.707 - (0.30)\ (\text{Filler metal strength}) \\
&= 0.707\ (0.5\ \text{inc})\ (0.30)\ (70\ \text{ksi}) \\
&= 7.4\ \text{kips/linear inch}
\end{aligned}
$$

Copyright American Welding Society
Provided by IHS under license with AWS
No reproduction or networking permitted without license from IHS

Licensee=University of Texas Revised Sub Account/5620001114
Not for Resale, 08/29/2012 23:50:47 MDT

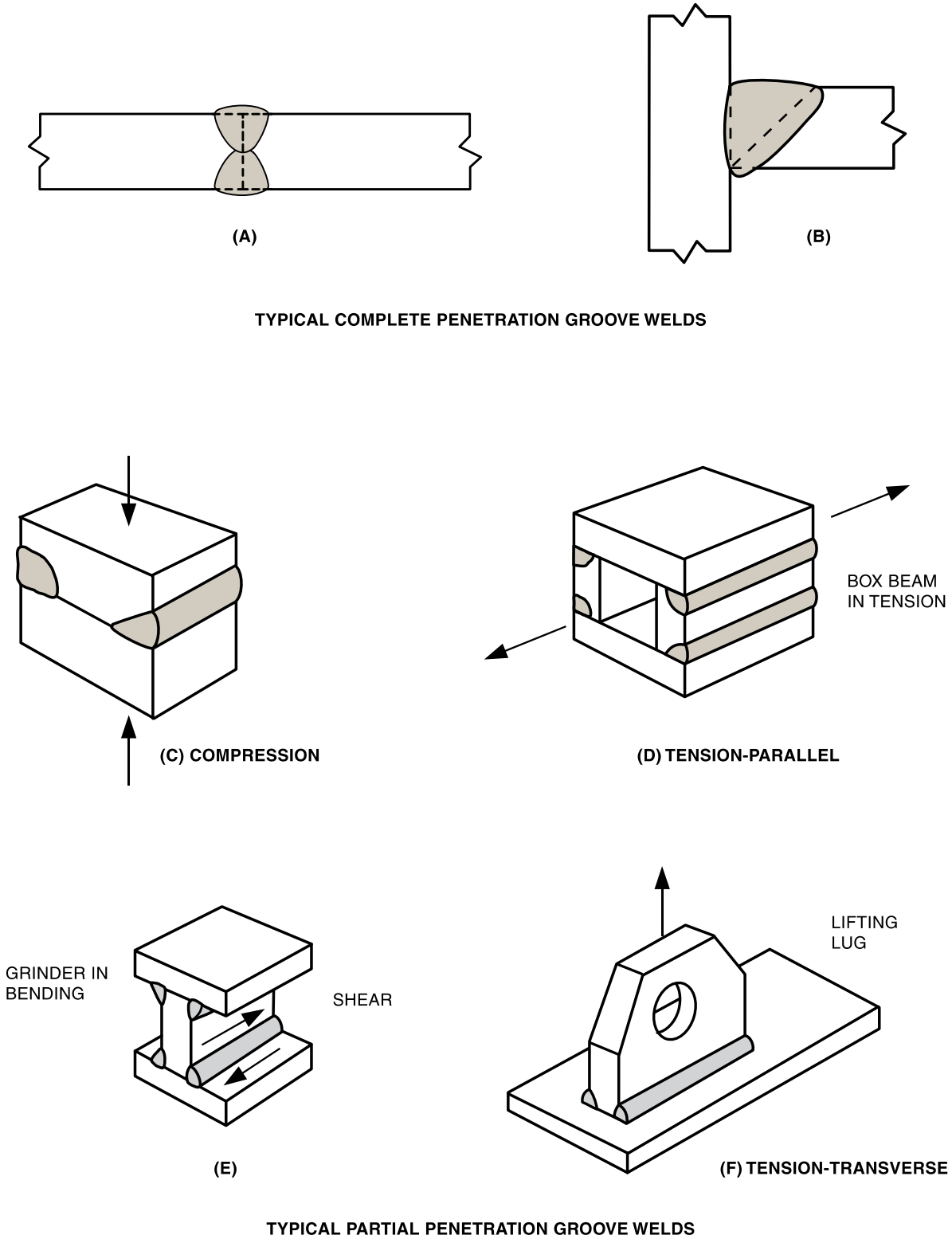

Figure C.1—Typical Groove Welds

Copyright American Welding Society
Provided by IHS under license with AWS
No reproduction or networking permitted without license from IHS
Licensee=University of Texas Revised Sub Account/5620001114
Not for Resale, 08/29/2012 23:50:47 MDT

Table C.1
Allowable Static Load on Fillet and Partial Penetration Groove Welds

	Minimum Electrode Tensile Strength in ksi [MPa][a]						
	60 [415]	70 [485]	80 [550]	90 [620]	100 [690]	110 [760]	120 [825]
	Allowable Shear Stress on Throat of Fillet Weld or Partial Penetration Groove Weld in ksi [MPa]						
	18.0 [125]	21.0 [145]	24.0 [165]	27.0 [186]	30.0 [205]	33.0 [230]	36.0 [250]
Leg Size in [mm]	Allowable Unit Force on Fillet Weld klbf/linear inch [kN/25 mm]						
1 [25]	12.7 [56]	14.8 [65]	17 [74]	19.1 [84]	21.2 [93]	23.3 [102]	25.4 [111]
3/4 [20]	9.5 [42]	11.1 [49]	12.7 [56]	14.3 [63]	15.9 [70]	17.5 [77]	19.1 [84]
5/8 [16]	8.0 [35]	9.3 [41]	10.6 [46]	11.9 [52]	13.3 [58]	14.6 [64]	15.9 [70]
1/2 [13]	6.4 [28]	7.4 [32]	8.5 [37]	9.6 [42]	10.6 [46]	11.7 [51]	12.7 [56]
3/8 [10]	4.8 [21]	5.6 [25]	6.4 [28]	7.2 [32]	8.0 [35]	8.8 [39]	9.6 [42]
1/4 [6]	3.2 [14]	3.7 [16]	4.2 [18]	4.8 [21]	5.3 [23]	5.8 [25]	6.4 [28]

[a] Electrode tensile strength requirements are found in AWS filler metal specifications.

The minimum allowable sizes for fillet welds, Figures C.2(A) and C.2(B), are given in Table C.2. Where materials of different thickness are being joined, the minimum fillet weld size is governed by the thicker material, but this size does not have to exceed the thickness of the thinner material, unless required by the calculated stress.

C3.5.2 The allowable tensile or compressive stress in the base metal of a weldment subject to static loading is not to exceed 50% of the minimum specified yield strength of the base metal.

C4. Fatigue Stresses

C4.1 Weld joints in a structure introduce stress concentrations that reduce fatigue life. Examples of these stress concentrations are weld ripple, undercut, crowned reinforcement, lack of penetration, slag inclusions, micro cracks, and craters.

C4.2 Allowable Fatigue Stresses

C4.2.1 Members subject to fatigue loading shall be designed to satisfy the following conditions illustrated schematically in Figure C.3.

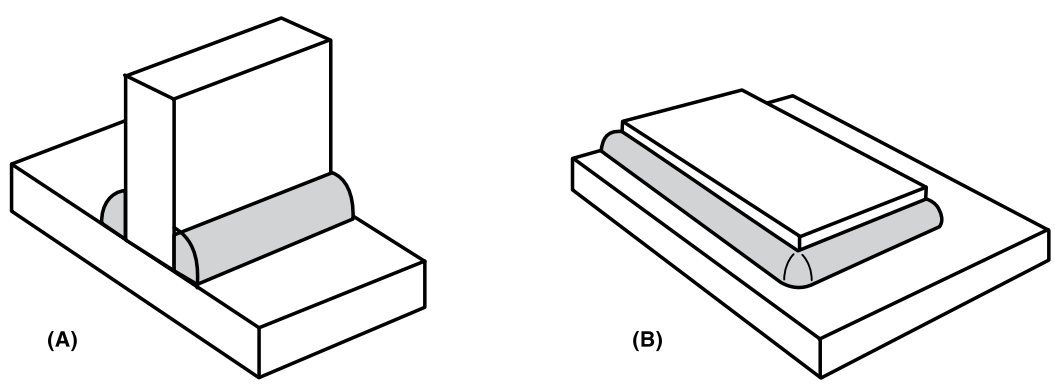

Figure C.2—Typical Fillet Welds

Copyright American Welding Society
Provided by IHS under license with AWS
No reproduction or networking permitted without license from IHS
Licensee=University of Texas Revised Sub Account/5620001114
Not for Resale, 08/29/2012 23:50:47 MDT

Table C.2
Allowable Stress in Weld Metal

Type of Weld	Stress in Weld[a]		Allowable Stress	Required Weld Strength Level[b]
Complete joint penetration groove welds (Joint Class I, II, III, or IV)	Tension normal to the effective area		Same as base metal	Matching weld metal must be used.
	Compression normal to the effective area		Same as base metal	Weld metal with a strength level equal to or one classification (10 ksi [69 MPa]) less than matching weld metal may be used.
	Tension or compression parallel to the axis of the weld.		Same as base metal	Weld metal with a strength level equal to or less than matching weld metal may be used.
	Shear on the effective area		0.27 times nominal tensile strength of weld metal, except shear stress on base metal shall not exceed 0.36 times yield strength of base metal.	
Partial joint penetration groove welds (Joint Class IV or V)	Compression normal to effective area	Joint not designed to bear	0.45 times nominal tensile strength of weld metal, except stress on base metal shall not exceed 0.55 times yield strength of base metal.	
		Joint designed to bear	Same as base metal	
	Tension or compression parallel to the axis of the weld[c]		Same as base metal	
	Shear parallel to the axis of metal.		0.27 times nominal tensile strength of weld metal, except shear stress on base metal shall not exceed 0.36 times yield strength of base metal.	
	Tension normal to effective area.		0.27 times nominal tensile strength of weld metal, except tensile stress on base metal shall not exceed 0.55 times yield strength of base metal.	
Fillet welds (Joint Class IV, V, or VI)	Shear on effective area		0.27 times nominal tensile strength of weld metal, except shear stress on base metal shall not exceed 0.55 times yield strength of base metal.	Weld metal with a strength level equal to or less than matching weld metal may be used.
	Tension or compression parallel to axis of weld[c]		Same as base metal	
Plug and slot welds (Joint Class V or VI)	Shear parallel to faying surfaces (on effective area)		0.27 times nominal tensile strength of weld metal, except shear stress on base metal shall not exceed 0.36 times yield strength of base metal.	Weld metal with a strength level equal to or less than matching weld metal may be used.

[a] For definitions of effective area, see 4.4.1 and 4.5.2.
[b] For matching weld metal, see Table 7a or Table 7b.
[c] Fillet weld and partial joint penetration groove welds joining the component elements parallel to the axis of the welds.

Copyright American Welding Society
Provided by IHS under license with AWS
No reproduction or networking permitted without license from IHS
Licensee=University of Texas Revised Sub Account/5620001114
Not for Resale, 08/29/2012 23:50:47 MDT

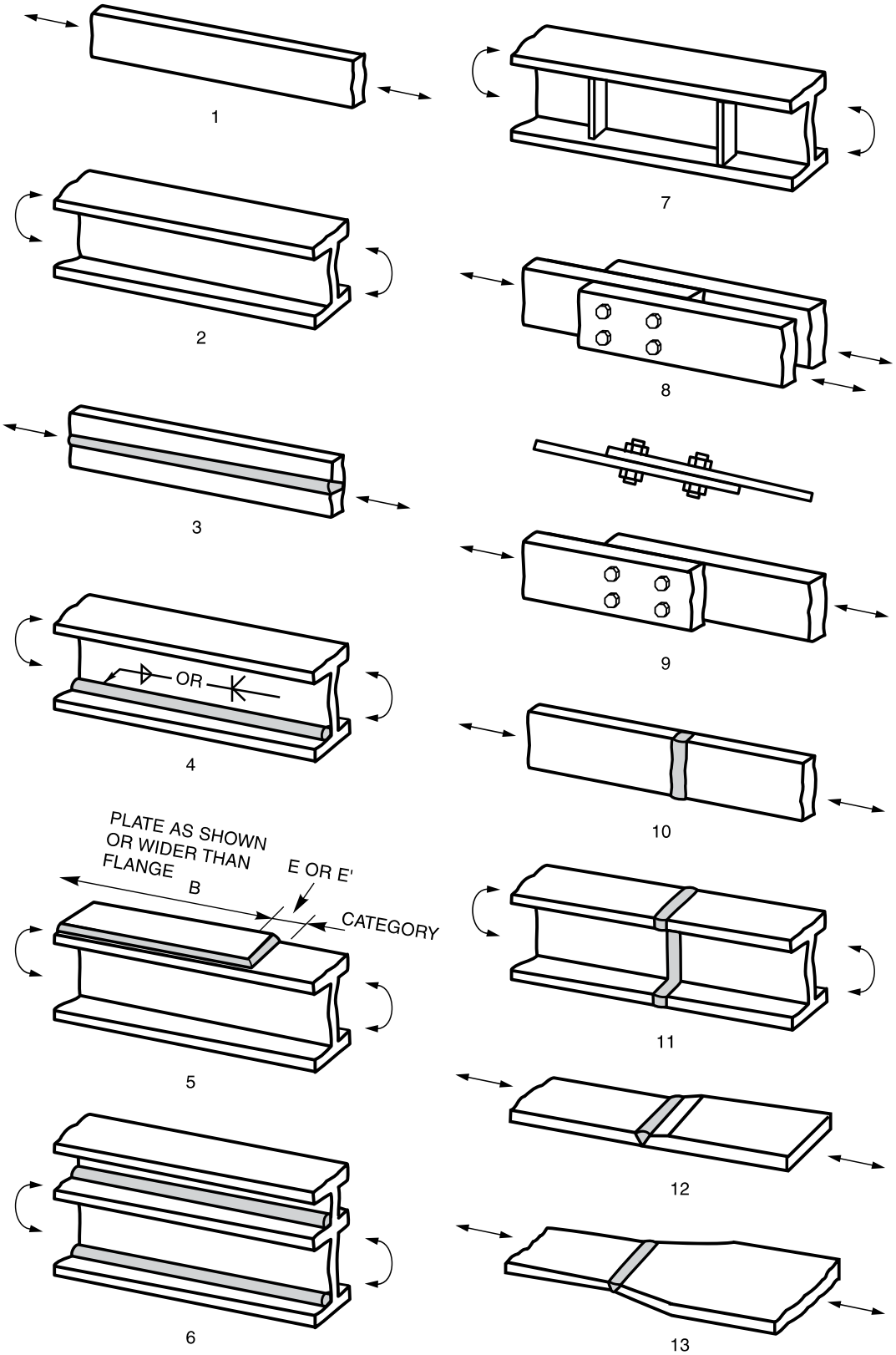

Figure C.3—Illustrative Examples for Table C.3

Copyright American Welding Society
Provided by IHS under license with AWS
No reproduction or networking permitted without license from IHS
Licensee=University of Texas Revised Sub Account/5620001114
Not for Resale, 08/29/2012 23:50:47 MDT

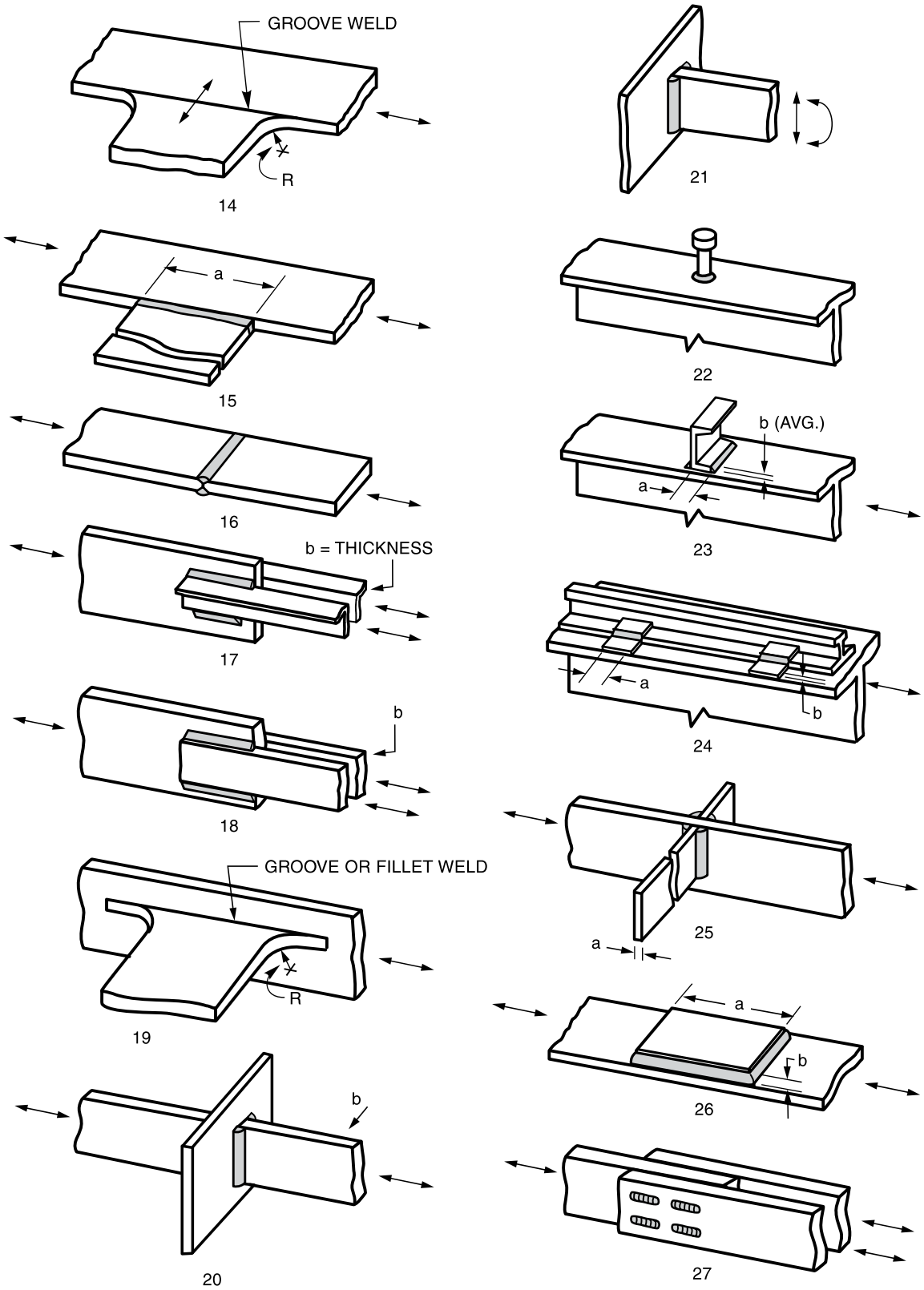

Figure C.3 (Continued)—Illustrative Examples for Table C.3

Copyright American Welding Society
Provided by IHS under license with AWS
No reproduction or networking permitted without license from IHS

Licensee=University of Texas Revised Sub Account/5620001114
Not for Resale, 08/29/2012 23:50:47 MDT

(1) The maximum working stress shall not exceed the allowable stress in C4.2.2 and C4.2.3.

(2) The working stress range shall not exceed the allowable stress range in Table C.5 for the applicable stress category. Stress categories for weld joint configurations are described in Table C.4 and illustrated in Figure C.3. Allowable stress range values are shown in Figures C.4 and C.5. The relationship between allowable and working stresses is illustrated graphically in Figure C.6.

C4.2.2 The allowable tensile or compressive stress in the base metal of a weldment subject to fatigue loading is not to exceed 25% of the minimum specified ultimate tensile strength of the base metal. The allowable shear stress in the base metal for a weldment subject to fatigue loading is not to exceed 20% of the minimum specified ultimate tensile strength of the base metal. Bucking and other modes of failure, such as wear, are not considered.

C4.2.3 The allowable stress in weld metal shall conform to Table C.3.

C4.2.4 The allowable stress range values shown in Figures C.4 and C.5 and Table C.5 are based on a 95% confidence limit for 95% survival. The test specimens were welded without preheat and tested "as welded."

C4.2.5 The allowable stress range of a welded joint is the same in compression and tension.

C4.2.6 The allowable stress range of a welded joint does not increase with an increase in material tensile strength. An A 36 steel weld joint has the same fatigue strength as the same joint made from A 514 steel.

C4.3 Multiaxial stresses acting on an element are to be combined and the requirements of C4.2.1 applied.

C4.4 The values and conditions described in Tables C.4 and C.5, and Figures C.3 and C.4 are for welded structural assemblies. While there is reasonable evidence to support the belief that this data can be applied to heavy sections and welded mechanical parts used in press construction, care should be taken, or, in extreme cases, supporting experiments run.

C4.5 The use of intermittent welds will introduce many weld ends. These can have a wide range of weld termination conditions, resulting in undercutting and other weld defects. The use of intermittent welds in highly stressed assemblies should be avoided because the allowable stress range is very low (see Table C.5, Category E).

C4.6 Miner's Rule provides a reasonable estimate of variable stress cycle cumulative fatigue damage.

Miner's Rule: Failure occurs when:

$$\sum_{i=1}^{i=p} \frac{n_i}{N_i} = 1.0$$

or

$$\frac{n_1}{N_1} + \frac{n_2}{N_2} + \frac{n_3}{N_3} \cdots \frac{n_p}{N_p} = 1.0$$

where

p = total number of different stress range levels

n_i = number of stress cycles at the S_i stress range level

N_i = total number of stress range cycles to failure at the S_i stress range level

S_i = maximum stress range in a loading cycle

C4.7 Calculated stress values are increased by an appropriate stress concentration factor if a weld joint falls near a geometric discontinuity such as a hole or sharp corner.

C4.8 Stress relief does not improve the fatigue strength of low-restraint welds in structural and unalloyed low-carbon grade steels. However, preheating and stress relief of high-resistant welds, such as thick sections, has been found necessary to avoid cracking (see Clause 12, Post-weld Treatments).

C5. Bibliography for Annex C

(1) Fisher J. W., Frank, K. H., Hirt, M. A., and McNamee, B. M. *Evaluation of Fatigue Tests and Design Criteria on Welded Details*. National Cooperative Highway Research Program 286.

(2) Maddox, S. J. *An Introduction to the Fatigue of Welded Joints*. The Welding Institute.

(3) Gurney, T. R. *Fatigue Design Rules for Welded Steel Joints*. The Welding Institute.

(4) Miner, M. A. "Cumulative damage in fatigue." *Journal of Applied Mechanics*, September 1945.

(5) American Welding Society. *Structural Welding Code—Steel*, AWS D1.1. Miami, FL: American Welding Society.

(6) American Welding Society. *Standard Welding Terms and Definitions*, AWS A3.0, Miami, FL: American Welding Society.

(7) American Institute of Steel Construction. *Specification for Structural Steel Buildings*, American Institute of Steel Construction, June 1986.

(8) Blodgett, O. W. *Design of Weldments*. The James F. Lincoln Arc Welding Foundation.

Copyright American Welding Society
Provided by IHS under license with AWS
No reproduction or networking permitted without license from IHS

Licensee=University of Texas Revised Sub Account/5620001114
Not for Resale, 08/29/2012 23:50:47 MDT

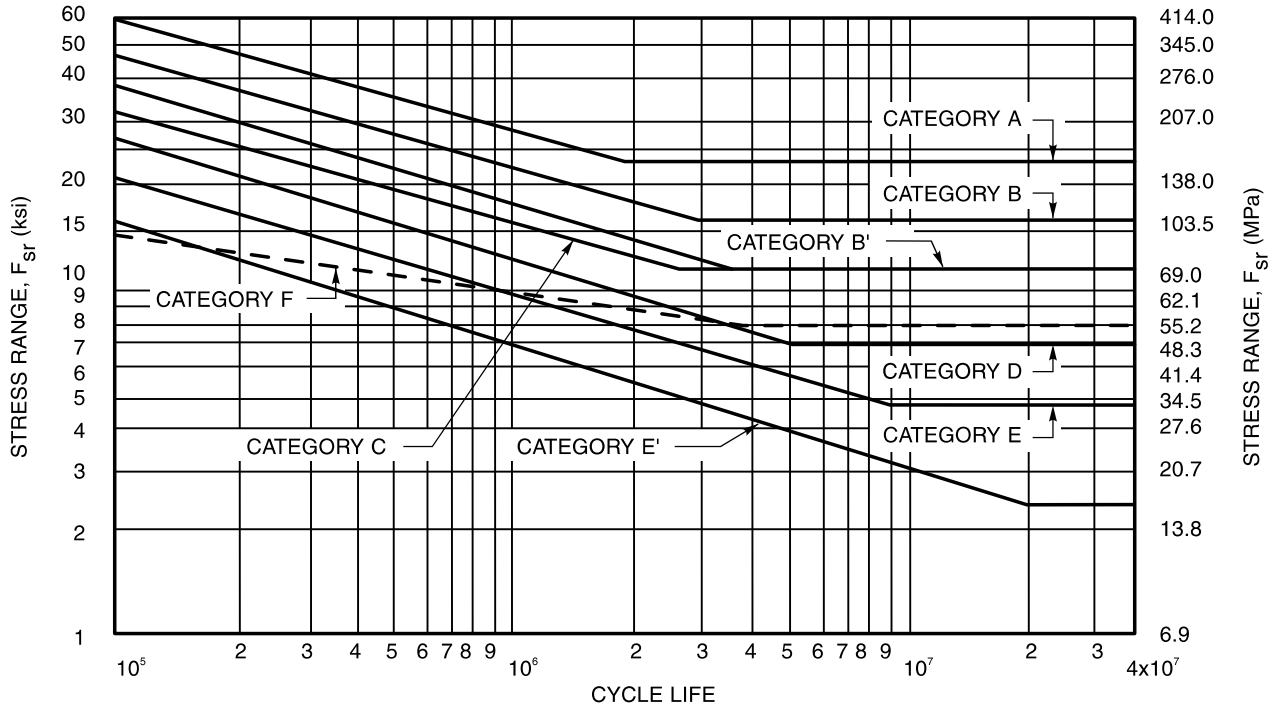

Figure C.4—Allowable Stress Range Curves for Categories A to F Redundant Structures

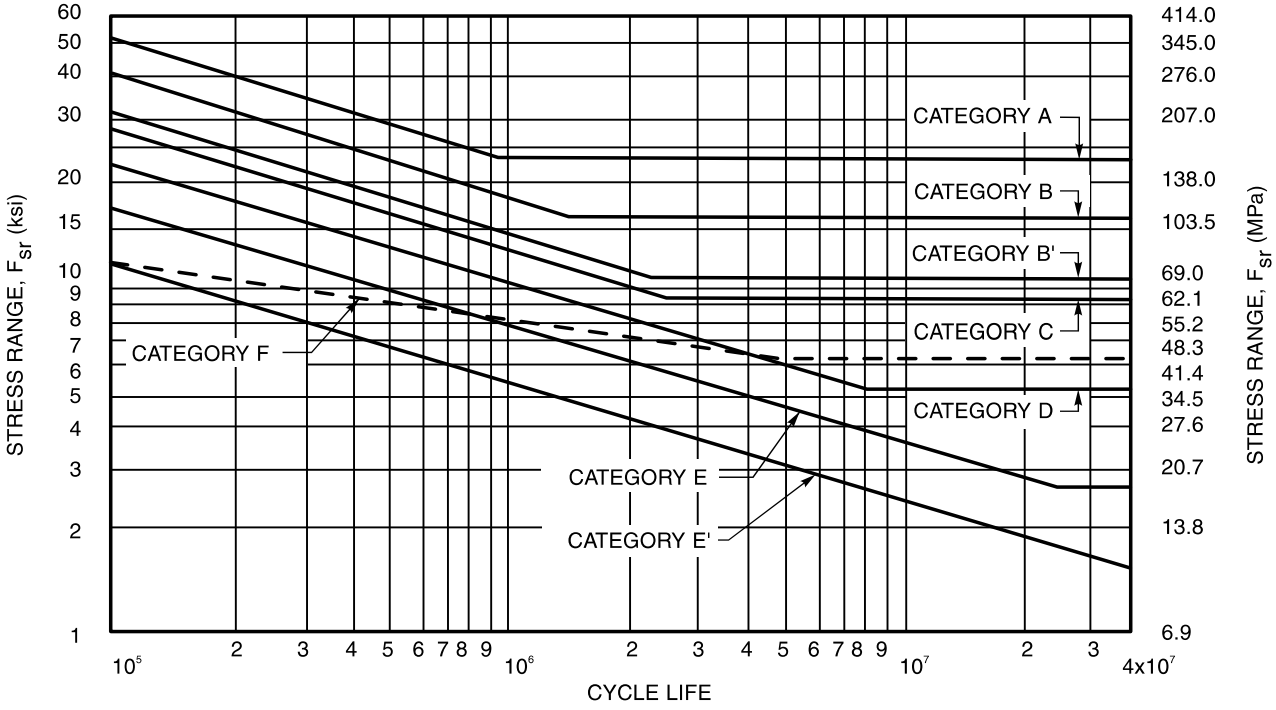

Figure C.5—Allowable Stress Range Curves for Categories A to F Nonredundant Structures

Copyright American Welding Society
Provided by IHS under license with AWS
No reproduction or networking permitted without license from IHS
Licensee=University of Texas Revised Sub Account/5620001114
Not for Resale, 08/29/2012 23:50:47 MDT

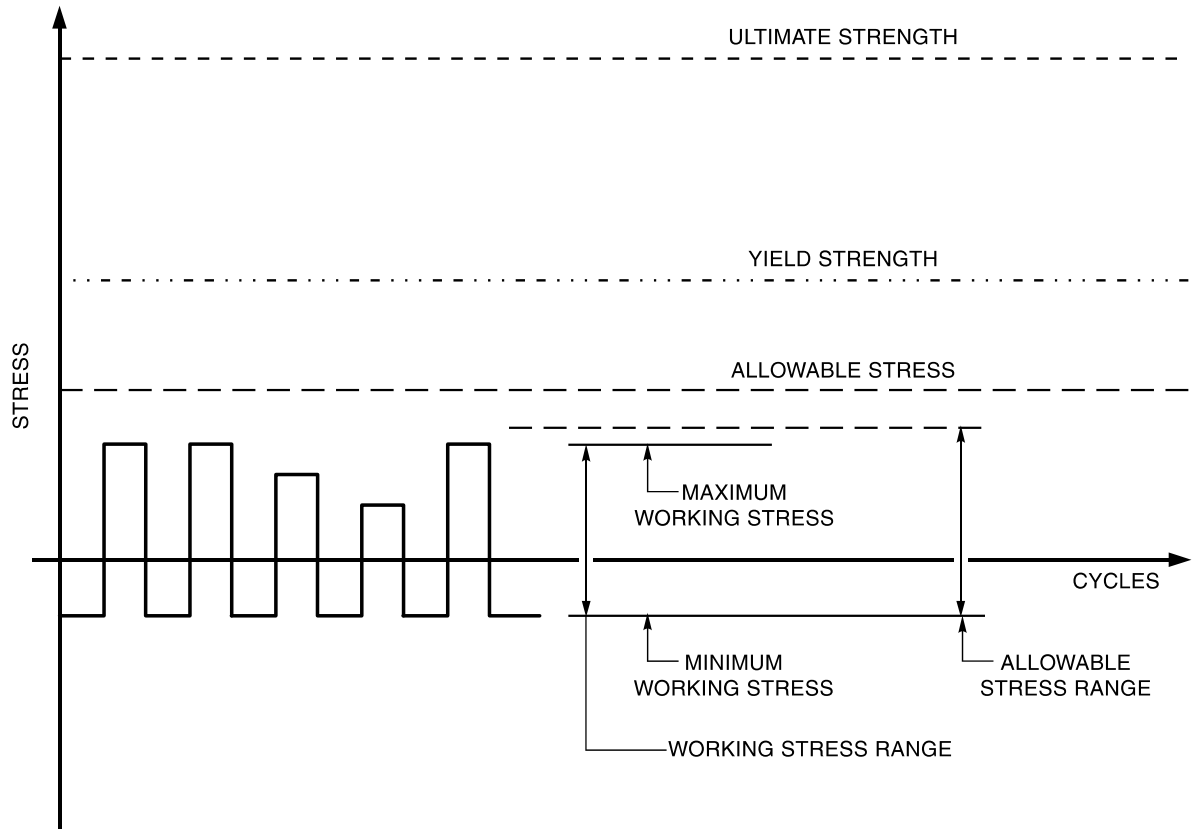

Notes:
1. Allowable Stress = 25% of Ultimate Strength (see B4.2.2).
2. Maximum Working Stress = Allowable Stress [see B4.2.1(a)].
3. Maximum Working Stress Range = Allowable Stress Range [see B4.2.1(b)].

Figure C.6—Graphic Representation of Allowable and Working Stresses under Cyclic Loading Conditions

Copyright American Welding Society
Provided by IHS under license with AWS
No reproduction or networking permitted without license from IHS
Licensee=University of Texas Revised Sub Account/5620001114
Not for Resale, 08/29/2012 23:50:47 MDT

Table C.3
Stress Categories to Determine Allowable Stress Range

General Condition	Situation	Kind of Stress[a]	Stress Category (See Table C.4)	Illustrative Example Nos. (See Fig. C.3)[b]
Plain Material	Base metal with rolled or cleaned surface. Flame-cut edges with ANSI smoothness of 100 [100 μm] or less	T or Rev.	A	1, 2
Built-Up Members	Base metal and weld metal in members without attachments, built-up plates, or shapes connected by continuous fillet welds parallel to the direction of applied stress	T or Rev.	B	3, 4, 5, 6
	Base metal and weld metal in members without attachments, built-up plates, or shapes connected by full-penetration groove welds with backing bars not removed, or by partial-penetration groove welds parallel to the direction of applied stress	T or Rev.	B'	3, 4, 5, 6
	Base metal at toe of welds on girder webs or flanges adjacent to welded transverse stiffeners	T or Rev.	C	7
	Base metal at ends of partial length welded cover plates narrower than the flange having square or tapered ends, with or without welds across the ends or wider than flange with welds across the ends Flange thickness ≤0.8 in [20 mm] Flange thickness >0.8 in [20 mm]	 T or Rev. T or Rev.	 E E'	 5 5
	Base metal at end of partial length welded cover plates wider than the flange without welds across the ends		E'	5
Groove Welds	Base metal and weld metal at full-penetration groove welded splices of parts of similar cross section ground flush, with grinding in the direction of applied stress and with weld soundness established by radiographic or ultrasonic inspection in accordance with the requirements of 8.3 or 8.4	T or Rev.	B	10, 11
	Base metal and weld metal at full-penetration groove welded splices at transitions in width or thickness, with welds ground to provide slopes no steeper than 1 to 2-1/2 with grinding in the direction of applied stress, and with weld soundness established by radiographic or ultrasonic inspection in accordance with the requirements of 8.3 or 8.4 A 514 base metal Other base metals	 T or Rev. T or Rev.	 B' B	 12, 13 12, 13
	Base metal and weld metal at full-penetration groove welded splices, with or without transitions having slopes no greater than 1 to 2-1/2 when reinforcement is not removed but weld soundness is established by radiographic or ultrasonic inspection in accordance with the requirements of 8.3 or 8.4	T or Rev.	C	10, 11, 12, 13
Partial Penetration Groove Welds	Weld metal of partial-penetration transverse groove welds, based on effective throat area of the weld or welds	T or Rev.	F[c]	16

(Continued)

Copyright American Welding Society
Provided by IHS under license with AWS
No reproduction or networking permitted without license from IHS
Licensee=University of Texas Revised Sub Account/5620001114
Not for Resale, 08/29/2012 23:50:47 MDT

Table C.3 (Continued)
Stress Categories to Determine Allowable Stress Range

General Condition	Situation	Kind of Stress[a]	Stress Category (See Table C.4)	Illustrative Example Nos. (See Fig. C.3)[b]
Fillet-Welded Connections	Base metal at intermittent fillet welds	T or Rev.	E	
	Base metal at junction of axially loaded members with fillet-welded end connections. Welds shall be disposed about the axis of the member so as to balance weld stresses			
	b ≤ 1 in [25 mm]	T or Rev.	E	17, 18
	b > 1 in [25 mm]	T or Rev.	E'	17, 18
	Base metal at members connected with transverse fillet welds b ≤ 1/2 in [13 mm] and b >1/2 in [13 mm]	T or Rev.	C[c]	20, 21
Fillet Welds	Weld metal of continuous or intermittent longitudinal or transverse fillet welds	S	F[c]	15, 17, 18, 20, 21
Plug or Slot Welds	Base metal at plug or slot welds	T or Rev.	E	27
	Shear on plug or slot welds	S	F	27
Mechanically Fastened Connections	Base metal at cross section of high-strength bolted slip-critical connections, except axially loaded joints which induce out-of-plane bending in connected material	T or Rev.	B	8
	Base metal at net section of other mechanically fastened joints	T or Rev.	D	8, 9
	Base metal at net section of fully tensioned high-strength, bolted bearing connections	T or Rev.	B	8, 9
Attachments	Base metal at details attached by full-penetration groove welds subject to longitudinal and/or transverse loading when the detail embodies a transition radius R with the weld termination ground smooth and for transverse loading, the weld soundness established by radiographic or ultrasonic inspection in accordance with 8.3 or 8.4			
	Longitudinal Loading			
	R > 24 in [600 mm]	T or Rev.	B	14
	24 in ≥ R > 6 in [600 mm ≥ R > 150 mm]	T or Rev.	C	14
	6 in ≥ R > 2 in [150 mm ≥ R > 50 mm]	T or Rev.	D	14
	R ≤ 2 in [50 mm]	T or Rev.	E	14
	Detail base metal for transverse loading: equal thickness and reinforcement removed			
	R > 24 in [600 mm]	T or Rev.	B	14
	24 in ≥ R > 6 in [600 mm ≥ R > 150 mm]	T or Rev.	C	14
	6 in ≥ R > 2 in [150 mm ≥ R > 50 mm]	T or Rev.	D	14
	R ≤ 2 in [50 mm]	T or Rev.	E	14, 15
	Detail base metal for transverse loading: equal thickness and reinforcement not removed			
	R > 24 in [600 mm]	T or Rev.	C	14
	24 in ≥ R > 6 in [600 mm ≥ R > 150 mm]	T or Rev.	C	14
	6 in ≥ R > 2 in [150 mm ≥ R > 50 mm]	T or Rev.	D	14
	R ≤ 2 in [50 mm]	T or Rev.	E	14, 15

(Continued)

Copyright American Welding Society
Provided by IHS under license with AWS
No reproduction or networking permitted without license from IHS
Licensee=University of Texas Revised Sub Account/5620001114
Not for Resale, 08/29/2012 23:50:47 MDT

Table C.3 (Continued)
Stress Categories to Determine Allowable Stress Range

General Condition	Situation	Kind of Stress[a]	Stress Category (See Table C.4)	Illustrative Example Nos. (See Fig. C.3)[b]
	Detail base metal for transverse loading: unequal thickness and reinforcement removed			
	R > 2 in [50 mm]	T or Rev.	D	14
	R ≤ 2 in [50 mm]	T or Rev.	E	14, 15
	Detail base metal for transverse loading: unequal thickness and reinforcement not removed			
	All R	T or Rev.	E	14, 15
	Detail base metal for transverse loading			
	R > 6 in [150 mm]	T or Rev.	C	19
	6 in ≥ R > 2 in [150 mm ≥ R > 50 mm]	T or Rev.	D	19
	R ≤ 2 in [50 mm]	T or Rev.	E	19
	Base metal at detail attached by full-penetration groove welds subject to longitudinal loading			
	2 in [50 mm] < a < 12b or 4 in [100 mm]	T or Rev.	D	15
	a > 12b or 4 in [100 mm] when b ≤ 1 in [25 mm]	T or Rev.	E	15
	a > 12b or 4 in [100 mm] when b > 1 in [25 mm]	T or Rev.	E	15
Attachments (Cont'd)	Base metal at detail attached by fillet welds or partial-penetration groove welds subject to longitudinal loading			
	a < 2 in [50 mm]	T or Rev.	C	15, 23, 24, 25, 26
	2 in [50 mm] < a < 12b or 4 in [100 mm]	T or Rev.	D	25, 23, 24, 26
	a > 12b or 4 in [100 mm] when b ≤ 1 in [25 mm]	T or Rev.	E	15, 23, 24, 26
	a > 12b or 4 in [100 mm] when b > 1 in [25 mm]	T or Rev.	E'	15, 23, 24, 26
	Base metal attached by fillet welds or partial-penetration groove welds subjected to longitudinal loading when the weld termination embodies a transition radius with the weld termination ground smooth			
	R > 2 in [50 mm]	T or Rev.	D	19
	R ≤ 2 in [50 mm]	T or Rev.	E	19
	Fillet-welded attachments where the weld termination embodies a transition radius, weld termination ground smooth, and main material subject to longitudinal loading			
	R > 2 in [50 mm]	T or Rev.	D	19
	R ≤ 2 in [50 mm]	T or Rev.	E	19
	Base metal at stud-type shear connector attached by fillet weld or automatic end weld	T or Rev.	C	22

[a] "T" signifies range in tensile stress only; "Rev." signifies a range involving reversal of tensile or compressive stress; "S" signifies range in shear, including shear stress reversal.
[b] These examples are provided as guidelines and are not intended to exclude other reasonably similar situations.
[c] Allowable fatigue stress range for transverse partial-penetration and transverse fillet welds is a function of the effective throat, depth of penetration and plate thickness. See Frank and Fisher, Journal of the Structural Division, Vol. 105 No. ST9, Sept. 1979.

Copyright American Welding Society
Provided by IHS under license with AWS
No reproduction or networking permitted without license from IHS
Licensee=University of Texas Revised Sub Account/5620001114
Not for Resale, 08/29/2012 23:50:47 MDT

Table C.4
Allowable Stress Range,[a] ksi [MPa]

Stress Category (From Table C.3)	Nominal Number of Loading Cycles			
	20 000[b] to 100 000	100 000 to 500 000	500 000 to 2 000 000	Over 2 000 000
A	63 [435]	37 [255]	37 [255]	24 [165]
B	49 [340]	29 [200]	29 [200]	16 [110]
B'	39 [270]	23 [160]	23 [160]	12 [80]
C	35 [240]	21 [145]	21 [145]	10 [70][c]
D	28 [190]	16 [110]	16 [110]	7 [50]
E	22 [150]	13 [90]	13 [90]	5 [35]
E'	16 [110]	9 [60]	9 [60]	3 [20]
F	15 [100]	12 [80]	12 [80]	8 [55]

[a] Stress range is defined as the algebraic difference between the maximum stress and the minimum stress. Tension stress is considered to have the opposite algebraic sign from compression stress.
[b] For under 20 000 loading cycles, use the allowable stress for static loading in accordance with C3.5.2.
[c] Flexural stress range of 12 ksi [80 MPa] permitted at toe of stiffener welds on flanges.

Table C.5
Double Fillet Weld Size to Develop Full Static Strength of Plate[a]

Thinner Plate Thickness (T) in [mm]	Full Strength[b] Weld (S = 3/4 T)[c] in [mm]	Thinner Plate Thickness (T) in [mm]	Full Strength[b] Weld (S = 3/4 T)[c] in [mm]
1/4 [6]	3/16 [5]	1-3/8 [35]	1 [25]
5/16 [8]	1/4 [6]	1-1/2 [38]	1-1/8 [28]
3/8 [10]	5/16 [8]	1-5/8 [41]	1-1/4 [32]
7/16 [11]	3/8 [10]	1-3/4 [44]	1-3/8 [35]
1/2 [13]	3/8 [10]	2 [50]	1-1/2 [38]
9/16 [14]	7/16 [11]	2-1/8 [54]	1-5/8 [41]
5/8 [16]	1/2 [13]	2-1/4 [57]	1-3/4 [44]
3/4 [20]	9/16 [15]	2-3/8 [60]	1-3/4 [44]
7/8 [22]	5/8 [16]	2-1/2 [64]	1-7/8 [48]
1 [25]	3/4 [20]	2-5/8 [67]	2 [50]
1-1/8 [28]	7/8 [22]	2-3/4 [70]	2 [50]
1-1/4 [32]	1 [25]	3 [75]	2-1/4 [57]

[a] The fillet sizes listed do not take into consideration the effective throat thickness obtainable form GMAW, FCAW, and SAW processes.
[b] Filler metal properties match with base metal in strength.
[c] S = leg size of fillet weld.

Copyright American Welding Society
Provided by IHS under license with AWS
No reproduction or networking permitted without license from IHS
Licensee=University of Texas Revised Sub Account/5620001114
Not for Resale, 08/29/2012 23:50:47 MDT

This page is intentionally blank.

Copyright American Welding Society
Provided by IHS under license with AWS
No reproduction or networking permitted without license from IHS

Licensee=University of Texas Revised Sub Account/5620001114
Not for Resale, 08/29/2012 23:50:47 MDT

Annex D (Informative)
Quality Control System

This annex is not part of AWS D14.5/D14.5M:2009, *Specification for Welding of Presses and Press Components*, but is included for informational purposes only.

D1. General

The quality control system used by the Manufacturer should meet the requirements of this specification and possibly conform to a standard that deals with quality systems. A written description of the system should be available to the Purchaser's Inspector for review. Depending on the circumstances, the description may contain information of a proprietary nature relating to the Manufacturer's process. Therefore, information about the system should be treated as confidential.

D2. Recommended Contents for Quality Control Systems

The following elements are a guide to the features that should be covered in the written documentation of the quality system. These elements are applicable to both shop and field work.

D2.1 Authority and Responsibility. The authority and responsibility of those in charge of the quality system should be clearly established. Personnel performing quality control functions should have sufficient and well-defined authority to identify problems in quality control, the quality system, and the authority to act on correcting them. An organizational chart showing the relationships between management, engineering, purchasing, manufacturing, field construction, inspection, and quality control should be in place to identify responsibilities and interactions of the organizational groups.

D2.2 Control of Specifications and Drawings. The quality system should contain procedures to ensure the latest applicable drawings, specifications, and instructions (including authorized changes) are used for manufacturing, inspection, and testing.

D2.3 Control of Materials

D2.3.1 The quality system should include control procedures for purchasing and receiving that will assure the proper identification of received materials. Documentation (including material certifications or material test reports) should be obtained, retained, and meet the requirements of the specification or contract. The quality system should also contain provisions to assure the intended, correct use of the materials in the manufacturing or construction process.

D2.3.2 The Buyer's Inspector should make certain that only materials conforming to the specification are used, and that the materials have proper identification and are properly stored.

D2.4 Examination and Inspection Controls. The quality system should contain provisions for the proper description and documentation of the manufacturing and inspection processes (including results) to permit the Purchaser's Inspector to properly determine if conformance to the contractual specifications has been met.

D2.4.1 Nondestructive Examination. The quality system should include provisions for identifying the test methods that the Manufacturer uses to conform to the requirements of this specification.

D2.4.2 Heat Treatment. The quality system should provide for documentation that ensures conformity to heat treatment requirements (if any) of this specification are met.

Copyright American Welding Society
Provided by IHS under license with AWS
No reproduction or networking permitted without license from IHS
Licensee=University of Texas Revised Sub Account/5620001114
Not for Resale, 08/29/2012 23:50:47 MDT

D2.4.3 Corrections of Nonconformities. The quality system should describe the method used to correct nonconformities and documentation thereof.

D2.5 Calibration of Measurement and Test Equipment. The quality system should contain provisions for the calibration of examination, measurement, and test equipment.

D2.6 Records Retention. The quality system should contain provisions for the retention and maintenance of records so that record retrieval is possible for a specified time interval. The records should be maintained on forms specified in the quality system and should be available for review by the purchaser or the purchaser's representative.

Copyright American Welding Society
Provided by IHS under license with AWS
No reproduction or networking permitted without license from IHS

Licensee=University of Texas Revised Sub Account/5620001114
Not for Resale, 08/29/2012 23:50:47 MDT

Annex E (Informative)
Suggested Qualification Record Forms

This annex is not part of AWS D14.5/D14.5M:2009, *Specification for Welding of Presses and Press Components*, but is included for informational purposes only.

This annex contains three forms for recording of procedure qualification, welder qualification, and welding operator qualification data as required by this specification. It is suggested that this information be recorded on these forms or similar forms prepared by the user. Variations of these forms to suit the user's needs are permissible.

Copyright American Welding Society
Provided by IHS under license with AWS
No reproduction or networking permitted without license from IHS
Licensee=University of Texas Revised Sub Account/5620001114
Not for Resale, 08/29/2012 23:50:47 MDT

WELDING PROCEDURE SPECIFICATION

Weld procedure no. _____

Revision _____

Page _____ of _____

Applicable code(s)

_____

_____

_____

Supporting PQR(s)

_____

_____

_____

Base Metal

M-no. _____ Group _____ M-no. _____ Group ___

Thickness range _____

Diameter range _____

Joint preparation

_____

_____

_____

Process(es)

_____

_____

_____

Cleaning (initial and interpass)

_____

_____

_____

Position

_____

Progression _____

_____

Gas

Shielding _____ Flow rate _____

Purge _____ Flow rate _____

Trailing _____ Flow rate _____

Filler metal

Process ___ Spec no. ___ F-no. _____ A-no. ____

Classification _____

Progression _____

Process ___ Spec no. ___ F-no. _____ A-no. ____

Other _____

Flux

Particle size _____

Trade Name _____

Preheat

Preheat temp., °F (°C) _____

Interpass range, °F (°C) _____

_____

Postweld heat treatment

Type _____

Temperature _____

Time _____

Additional or supplementary requirements

Preparation approval _____ Date _____

Welding engineer _____ _____

Materials engineering _____ _____

Quality assurance _____ _____

Issue Date _____

Project _____

Job no. _____

Form E.1 (Front)

Form E.1—Sample Welding Procedure Specification (WPS) (Front)

Copyright American Welding Society
Provided by IHS under license with AWS
No reproduction or networking permitted without license from IHS

Licensee=University of Texas Revised Sub Account/5620001114
Not for Resale, 08/29/2012 23:50:47 MDT

WELDING TECHNIQUE

Weld procedure no. _____

M-no. _____ Group_____ M-no._____ Group _____ Revision _____

Thickness range_____ to_____ Page _____ of _____

JOINT DESIGN/WELD SEQUENCE

WELD VARIABLES

		Filler metal		Gas/flux		Electrical data				
Pass	Process	Size	Class	Type	Flow	Type	Amperage	Volts	Travel, IPM	Max bead width

Preheat _____ Backgouging method _____

Interpass temp. _____ Contact tube to work (in) _____

Single or multiple arc _____ Orifice or cup size _____

Single or multiple pass_____ Weld progression _____

SPECIAL INSTRUCTIONS

Form E.1 (Back)

Form E.1 (Continued)—Sample Welding Procedure Specification (WPS) (Back)

Copyright American Welding Society
Provided by IHS under license with AWS
No reproduction or networking permitted without license from IHS

Licensee=University of Texas Revised Sub Account/5620001114
Not for Resale, 08/29/2012 23:50:47 MDT

PROCEDURE QUALIFICATION RECORD

PQR. No. _____

Page _____

Material spec. _____ to _____

M-no. _____ Group _____ M-no. _____ Group ___ Thickness and O.D. _____

Welding Processes 1. _____ 2. _____

Manual or Automatic 1. _____ 2. _____

Thickness Range 1. _____ 2. _____

Total Qualified Thickness Range _____

FILLER METAL

F-no.	1. _____	2. _____
A-no.	1. _____	2. _____
AWS Spec.	1. _____	2. _____
AWS Class.	1. _____	2. _____
Filler size	1. _____	2. _____
Trade Name	1. _____	2. _____
	2. _____	

Describe Filler Metal if not included AWS Specifications _____

FLUX OR ATMOSPHERE

Trade Name	1. _____	2. _____
Shielding Gas	1. _____	2. _____
Flow Rate	1. _____	2. _____
Purge	1. _____	2. _____

WELDING VARIABLES

Joint Type _____

Position _____

Backing _____

Preheat _____

Interpass Temp. Range _____

PWHT _____

Passes/Side	1. _____	2. _____
No. of Arcs	1. _____	2. _____
Current	1. _____	2. _____
Amps	1. _____	2. _____
Volts	1. _____	2. _____
Travel Speed	1. _____	2. _____
Oscillation	1. _____	2. _____
Bead Type	1. _____	2. _____

TENSILE TESTS

Specimen no.	Dimensions Width	Dimensions Thickness	Area	Ultimate Total Load, lb	Ultimate Unit Stress psi	Character of Failure and Location

GUIDED BEND TESTS

Type and Figure No.	Result	Type and Figure No.	Result

Welder's Name _____ Clock No. _____ Stamp No. _____

(who by virtue of these tests meets welder performance requirements.)

Laboratory Test No. _____

Test Conducted by _____ Address _____

per _____ Date _____

We certify that the statements in this record are correct and that the test welds were prepared, welded, and tested in accordance with the requirements of AWS D14.5/D14.5M, *Specification for Welding of Presses and Press Components*.

Signed _____
(Manufacturer)

Date _____ By _____

Form E.2

Form E.2—Sample Procedure Qualification Record (PQR)

Copyright American Welding Society
Provided by IHS under license with AWS
No reproduction or networking permitted without license from IHS

Licensee=University of Texas Revised Sub Account/5620001114
Not for Resale, 08/29/2012 23:50:47 MDT

WELDER AND WELDING OPERATOR QUALIFICATION TEST RECORD

Welder or welding operator name _____ Identification _____
Welding process _____ Manual _____ Semiautomatic _____ Machine _____
Position _____
(Flat, horizontal, overhead or vertical—if vertical, state whether upward or downward) in accordance with procedure specification no. _____
Material specification _____
Diameter and wall thickness (if pipe)—otherwise joint thickness _____
Thickness range this qualifies _____

FILLER METAL

Specification no. _____ Classification no. _____ F. no. _____
Describe filler metal (if not covered by AWS specification) _____
_____
Filler metal diameter and trade name _____ Flux for submerged arc or gas for gas metal arc or flux cored arc welding _____
_____

GUIDED BEND TEST RESULTS

Type	Result	Type	Result

Test conducted by _____ Laboratory test no. _____
per _____

FILLET TEST RESULTS

Appearance _____ Fillet size _____
Fracture test root penetration _____ Macroetch _____
(Describe the location, nature, and size of any crack or tearing of the specimen.)

Test conducted by _____ Laboratory test no. _____
per _____

RADIOGRAPHIC TEST RESULTS

Film Identification	Results	Remarks	Film Identification	Results	Remarks

Test witnessed by _____ Test no. _____
per _____

We, the undersigned, certify that the statements in this record are correct and that the welds were prepared and tested in accordance with the requirements of AWS D14.5/D14.5M, *Specification for Welding of Presses and Press Components*.

Manufacturer _____

Authorized by _____

Date _____

Form E.3

Form E.3—Sample Welder and Welding Operator Qualification Test Record

Copyright American Welding Society
Provided by IHS under license with AWS
No reproduction or networking permitted without license from IHS
Licensee=University of Texas Revised Sub Account/5620001114
Not for Resale, 08/29/2012 23:50:47 MDT

This page is intentionally blank.

Copyright American Welding Society
Provided by IHS under license with AWS
No reproduction or networking permitted without license from IHS

Licensee=University of Texas Revised Sub Account/5620001114
Not for Resale, 08/29/2012 23:50:47 MDT

Annex F (Informative)
Press and Press Components

This annex is not part of AWS D14.5/D14.5M:2009, *Specification for Welding of Presses and Press Components*, but is included for informational purposes only.

Copyright American Welding Society
Provided by IHS under license with AWS
No reproduction or networking permitted without license from IHS
Licensee=University of Texas Revised Sub Account/5620001114
Not for Resale, 08/29/2012 23:50:47 MDT

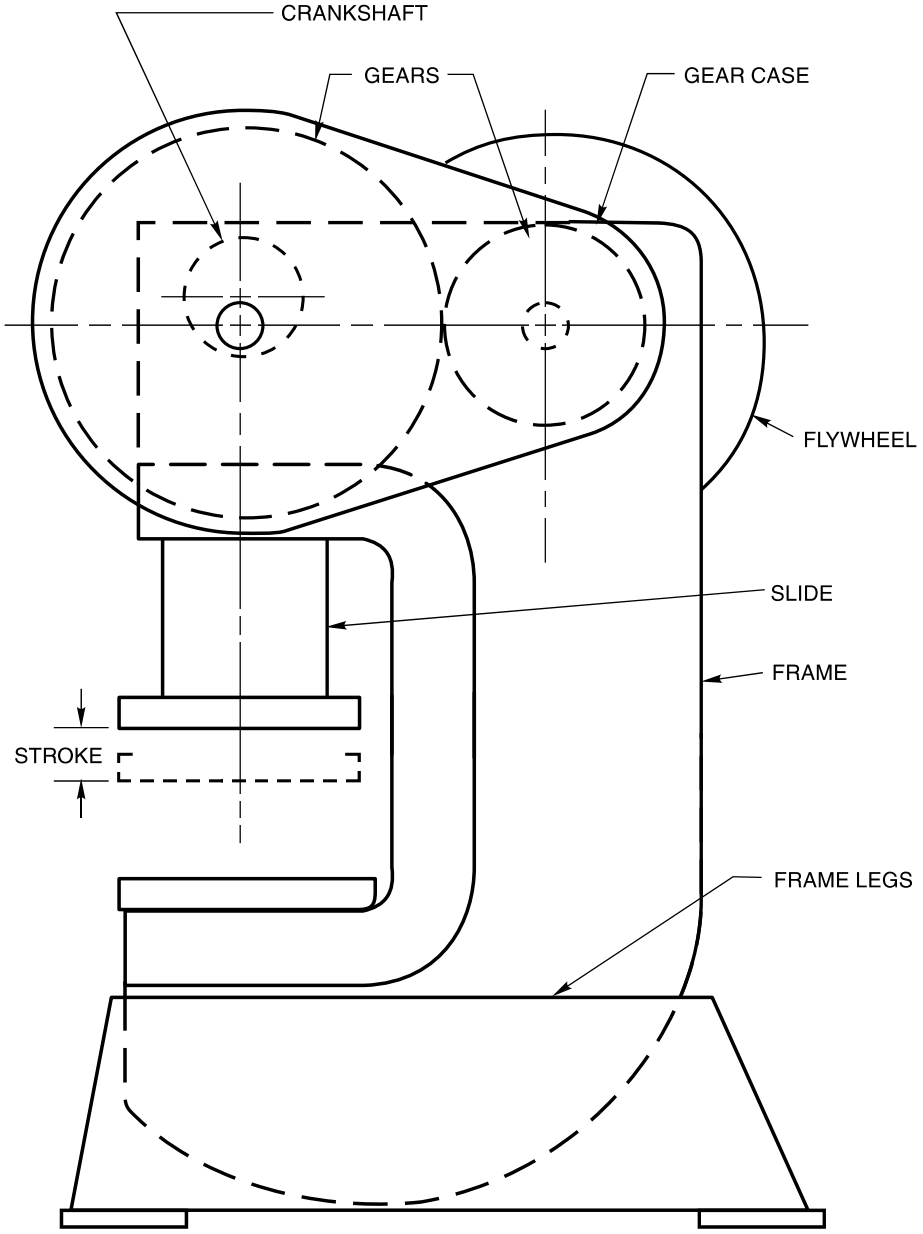

Figure F.1—Typical Frame Press

Copyright American Welding Society
Provided by IHS under license with AWS
No reproduction or networking permitted without license from IHS
Licensee=University of Texas Revised Sub Account/5620001114
Not for Resale, 08/29/2012 23:50:47 MDT

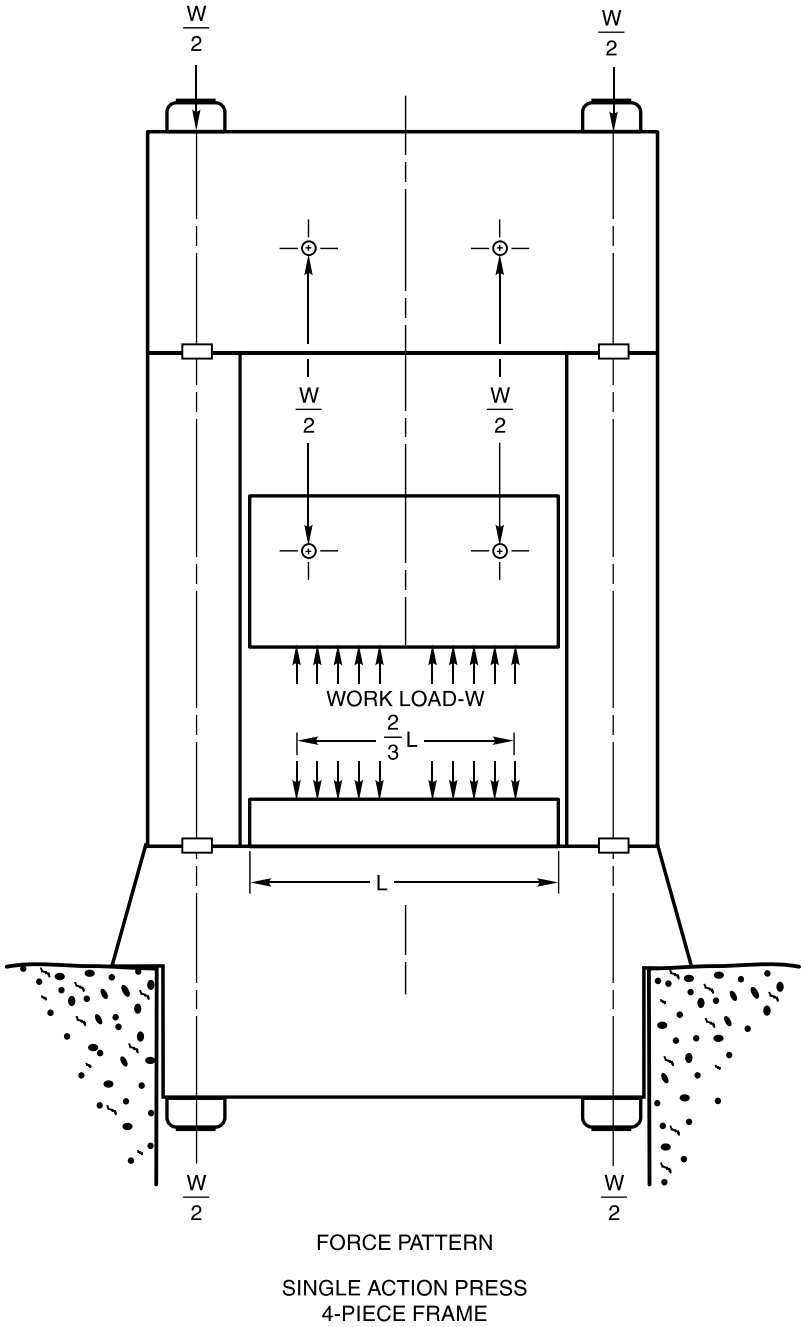

Figure F.2—Typical Press Loading

Copyright American Welding Society
Provided by IHS under license with AWS
No reproduction or networking permitted without license from IHS
Licensee=University of Texas Revised Sub Account/5620001114
Not for Resale, 08/29/2012 23:50:47 MDT

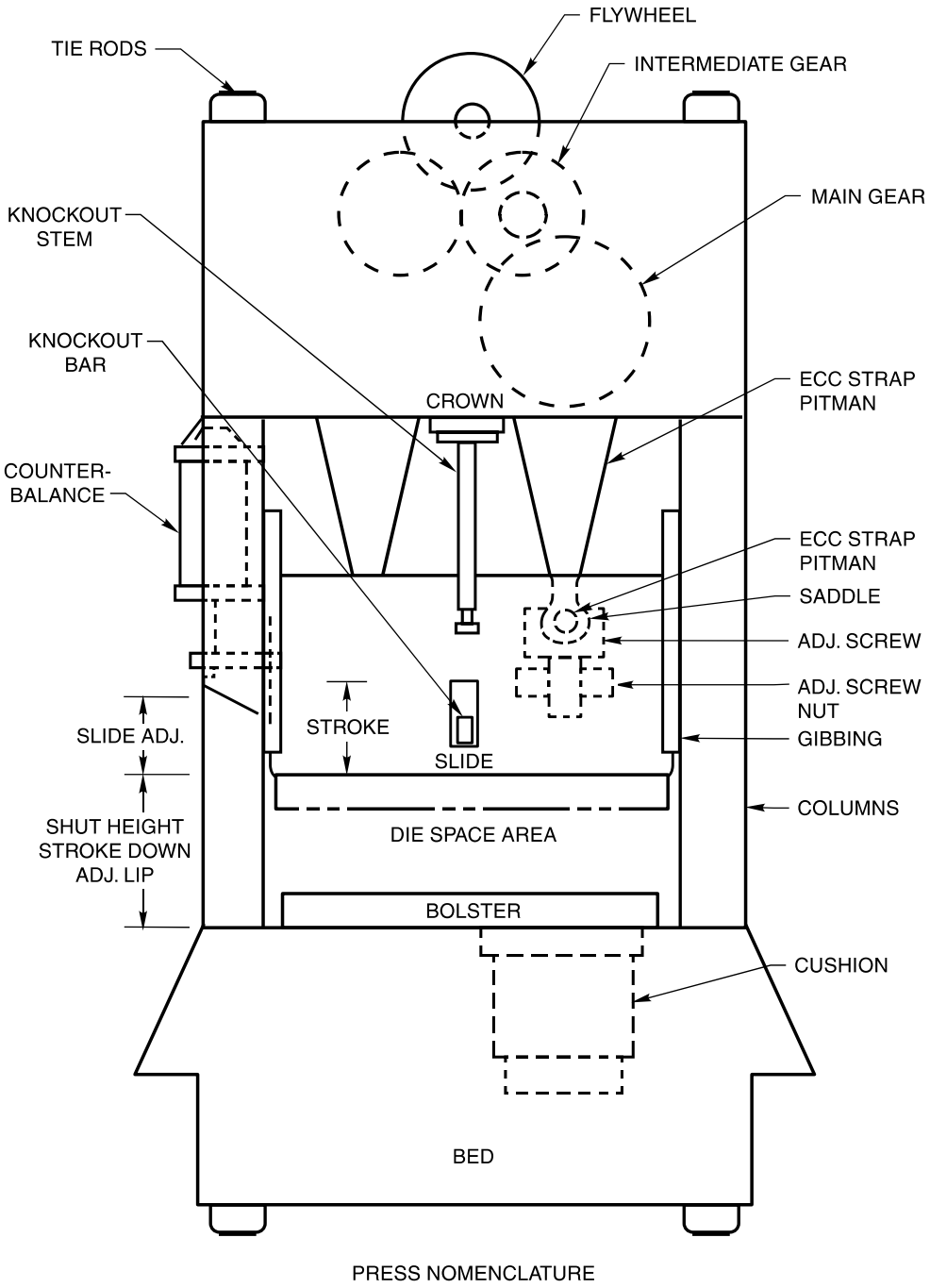

Figure F.3—Mechanical Press

Copyright American Welding Society
Provided by IHS under license with AWS
No reproduction or networking permitted without license from IHS
Licensee=University of Texas Revised Sub Account/5620001114
Not for Resale, 08/29/2012 23:50:47 MDT

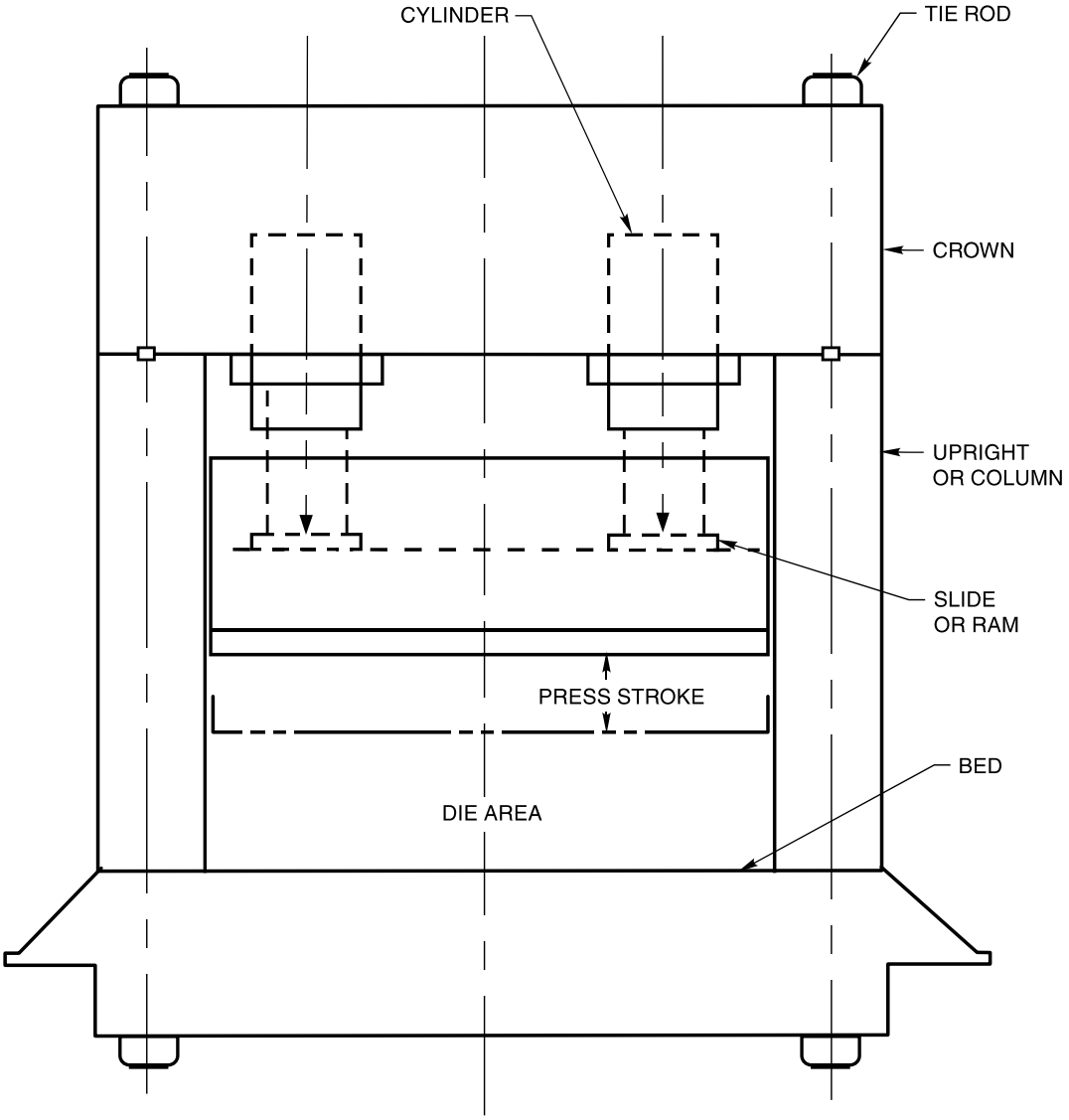

Figure F.4—Hydraulic Press

Copyright American Welding Society
Provided by IHS under license with AWS
No reproduction or networking permitted without license from IHS
Licensee=University of Texas Revised Sub Account/5620001114
Not for Resale, 08/29/2012 23:50:47 MDT

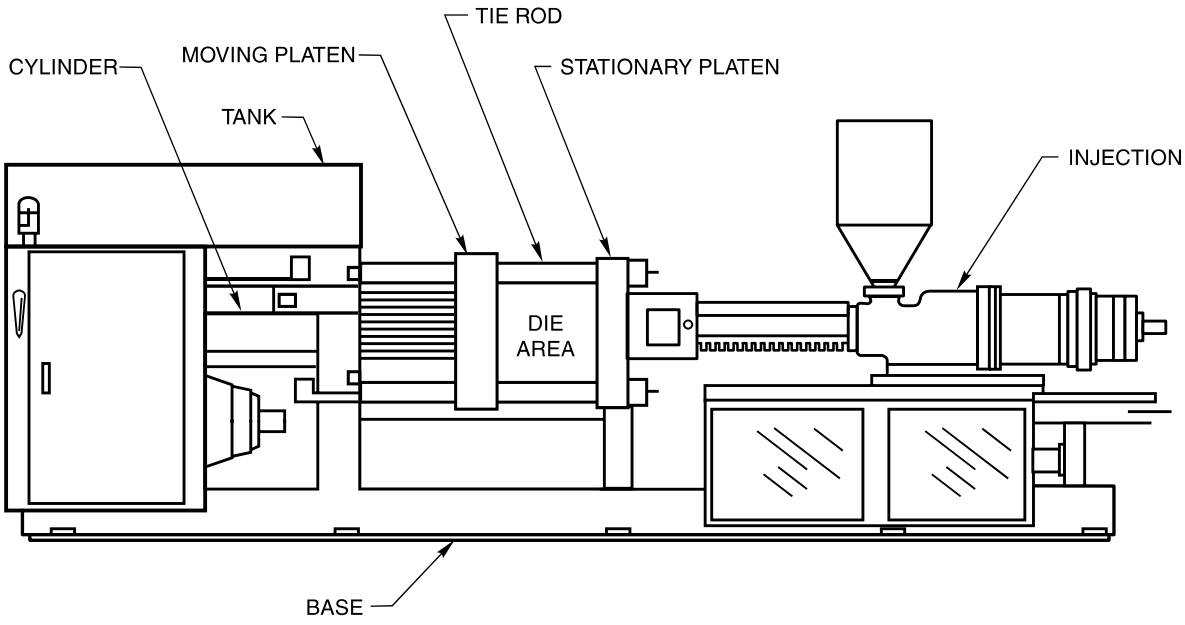

Figure F.5—Injection Molding Press

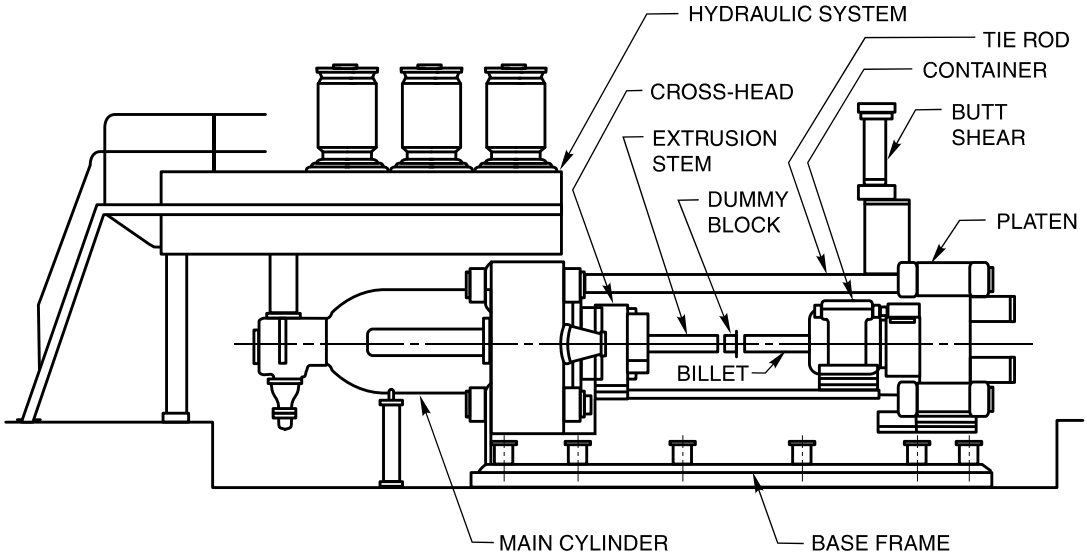

Figure F.6—Horizontal Hydraulic Extrusion Press

Copyright American Welding Society
Provided by IHS under license with AWS
No reproduction or networking permitted without license from IHS
Licensee=University of Texas Revised Sub Account/5620001114
Not for Resale, 08/29/2012 23:50:47 MDT

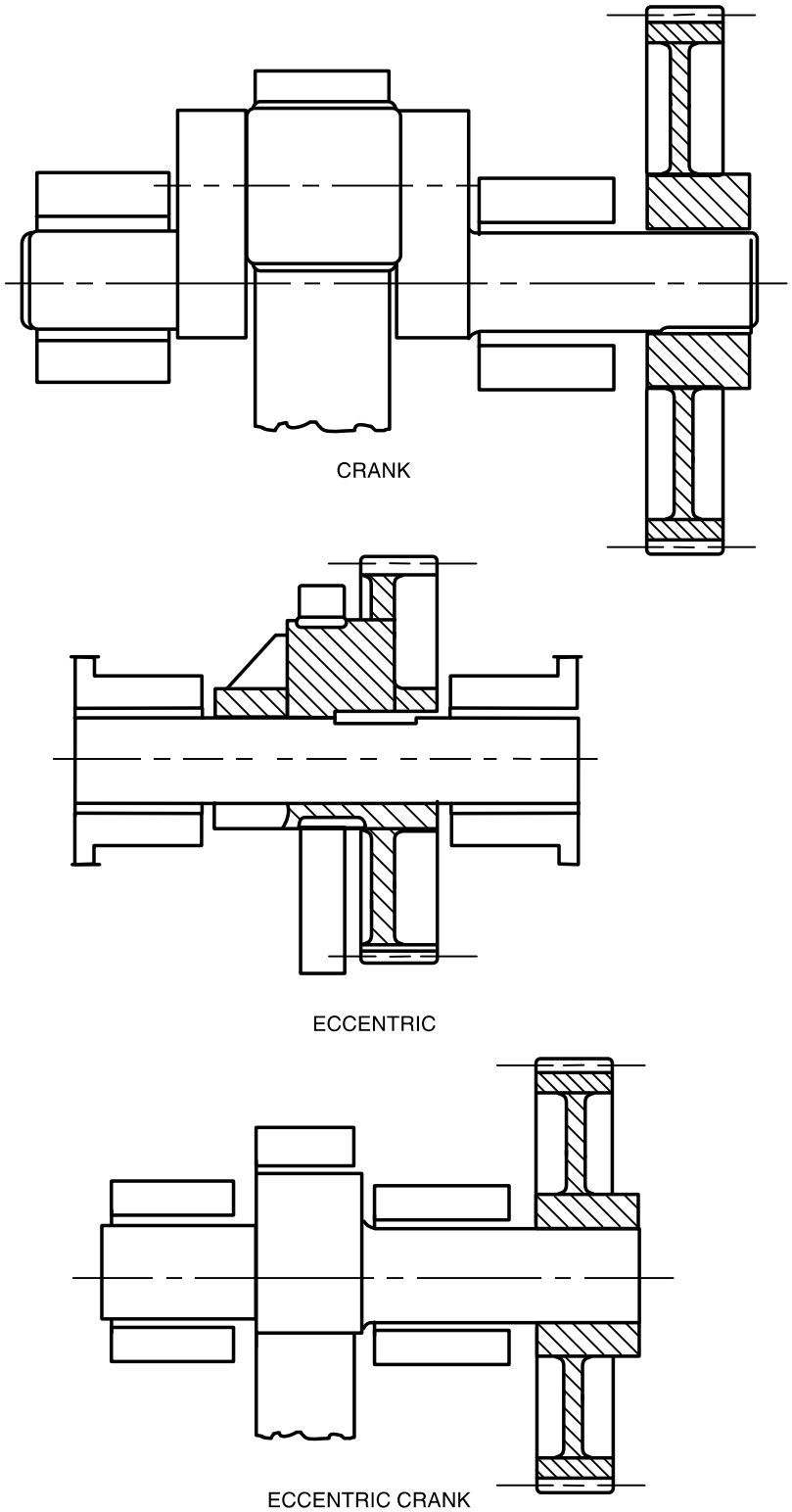

Figure F.7—Welded Gear Drive Types

Copyright American Welding Society
Provided by IHS under license with AWS
No reproduction or networking permitted without license from IHS
Licensee=University of Texas Revised Sub Account/5620001114
Not for Resale, 08/29/2012 23:50:47 MDT

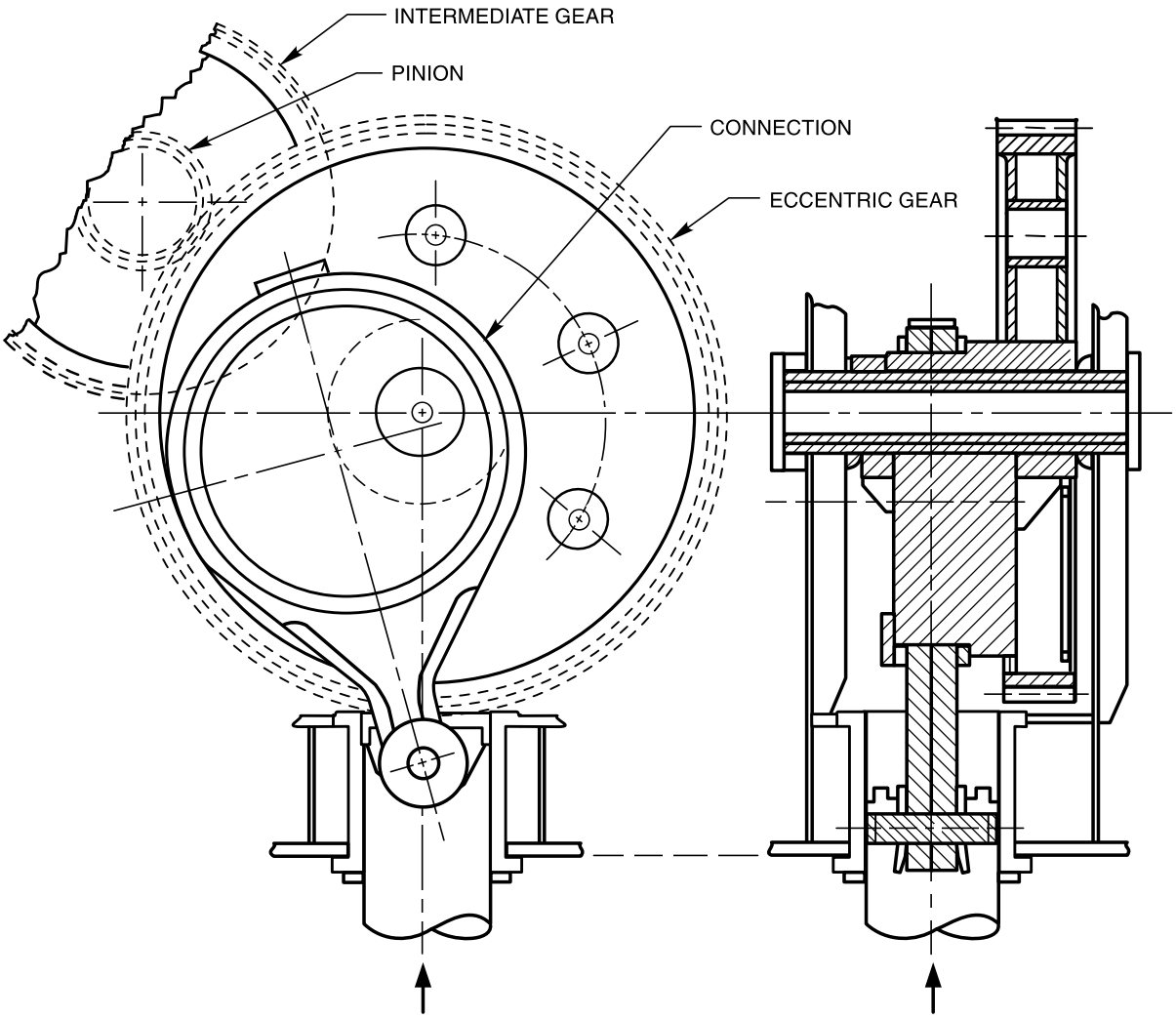

Figure F.8—Drive Mechanism

Copyright American Welding Society
Provided by IHS under license with AWS
No reproduction or networking permitted without license from IHS
Licensee=University of Texas Revised Sub Account/5620001114
Not for Resale, 08/29/2012 23:50:47 MDT

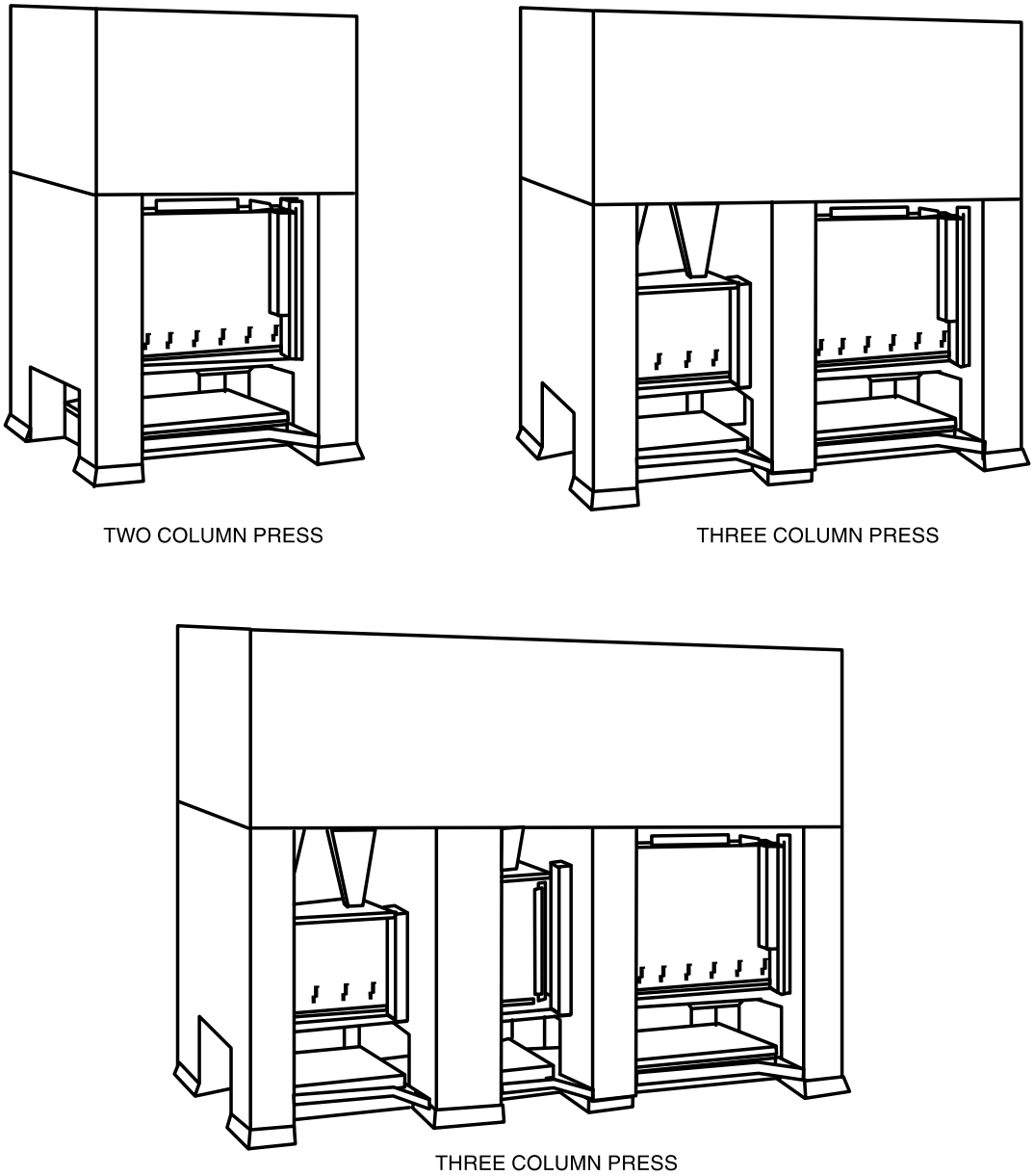

Figure F.9—Styles of Press

Copyright American Welding Society
Provided by IHS under license with AWS
No reproduction or networking permitted without license from IHS
Licensee=University of Texas Revised Sub Account/5620001114
Not for Resale, 08/29/2012 23:50:47 MDT

This page is intentionally blank.

Copyright American Welding Society
Provided by IHS under license with AWS
No reproduction or networking permitted without license from IHS
Licensee=University of Texas Revised Sub Account/5620001114
Not for Resale, 08/29/2012 23:50:47 MDT

Annex G (Informative)
Informative References

This annex is not part of AWS D14.5/D14.5M:2009, *Specification for Welding of Presses and Press Components*, but is included for informational purposes only.

ASME *Boiler and Pressure Vessel Code*, Section VIII, Division 1, *Rules for Construction of Pressure Vessels*, American Society of Mechanical Engineers;

ASME *Boiler and Pressure Vessel Code*, Section VIII, Division 2, *Alternative Rules, Rules for Construction of Pressure Vessels*, American Society of Mechanical Engineers;

ASME *Boiler and Pressure Vessel Code*, Section IX, *Welding and Brazing Qualifications*, American Society of Mechanical Engineers;

ASTM E 390, *Standard Reference Radiographs for Steel Fusion Welds*, American Society for Testing and Materials;

AWS B2.1, *Standard for Welding Procedure and Performance Qualification*, American Welding Society;

AWS D1.1, *Structural Welding Code—Steel*, American Welding Society;

AWS QC1, *Standard for AWS Certification of Welding Inspectors*, American Welding Society; and

W178.2, *Certification of Welding Inspectors*, Canadian Welding Bureau.

Copyright American Welding Society
Provided by IHS under license with AWS
No reproduction or networking permitted without license from IHS

Licensee=University of Texas Revised Sub Account/5620001114
Not for Resale, 08/29/2012 23:50:47 MDT

This page is intentionally blank.

Copyright American Welding Society
Provided by IHS under license with AWS
No reproduction or networking permitted without license from IHS

Licensee=University of Texas Revised Sub Account/5620001114
Not for Resale, 08/29/2012 23:50:47 MDT

Annex H (Informative)
Guidelines for the Preparation of Technical Inquiries

This annex is not part of AWS D14.5/D14.5M:2009, *Specification for Welding of Presses and Press Components*, but is included for informational purposes only.

H1. Introduction

The American Welding Society (AWS) Board of Directors has adopted a policy whereby all official interpretations of AWS standards are handled in a formal manner. Under this policy, all interpretations are made by the committee that is responsible for the standard. Official communication concerning an interpretation is directed through the AWS staff member who works with that committee. The policy requires that all requests for an interpretation be submitted in writing. Such requests will be handled as expeditiously as possible, but due to the complexity of the work and the procedures that must be followed, some interpretations may require considerable time.

H2. Procedure

All inquiries shall be directed to:

Managing Director
Technical Services Division
American Welding Society
550 N.W. LeJeune Road
Miami, FL 33126

All inquiries shall contain the name, address, and affiliation of the inquirer, and they shall provide enough information for the committee to understand the point of concern in the inquiry. When the point is not clearly defined, the inquiry will be returned for clarification. For efficient handling, all inquiries should be typewritten and in the format specified below.

H2.1 Scope. Each inquiry shall address one single provision of the standard unless the point of the inquiry involves two or more interrelated provisions. The provision(s) shall be identified in the scope of the inquiry along with the edition of the standard that contains the provision(s) the inquirer is addressing.

H2.2 Purpose of the Inquiry. The purpose of the inquiry shall be stated in this portion of the inquiry. The purpose can be to obtain an interpretation of a standard's requirement or to request the revision of a particular provision in the standard.

H2.3 Content of the Inquiry. The inquiry should be concise, yet complete, to enable the committee to understand the point of the inquiry. Sketches should be used whenever appropriate, and all paragraphs, figures, and tables (or annex) that bear on the inquiry shall be cited. If the point of the inquiry is to obtain a revision of the standard, the inquiry shall provide technical justification for that revision.

H2.4 Proposed Reply. The inquirer should, as a proposed reply, state an interpretation of the provision that is the point of the inquiry or provide the wording for a proposed revision, if this is what the inquirer seeks.

H3. Interpretation of Provisions of the Standard

Interpretations of provisions of the standard are made by the relevant AWS technical committee. The secretary of the committee refers all inquiries to the chair of the particular subcommittee that has jurisdiction over the portion of the standard addressed by the inquiry. The subcommittee reviews the inquiry and the proposed reply to determine what the response to the inquiry should be. Following the subcommittee's development of the response, the inquiry and the response are presented to the entire committee for review and approval. Upon approval by the committee, the interpretation is an official

Copyright American Welding Society
Provided by IHS under license with AWS
No reproduction or networking permitted without license from IHS
Licensee=University of Texas Revised Sub Account/5620001114
Not for Resale, 08/29/2012 23:50:47 MDT

interpretation of the Society, and the secretary transmits the response to the inquirer and to the *Welding Journal* for publication.

H4. Publication of Interpretations

All official interpretations will appear in the *Welding Journal* and will be posted on the AWS web site.

H5. Telephone Inquiries

Telephone inquiries to AWS Headquarters concerning AWS standards should be limited to questions of a general nature or to matters directly related to the use of the standard. The AWS *Board Policy Manual* requires that all AWS staff members respond to a telephone request for an official interpretation of any AWS standard with the information that such an interpretation can be obtained only through a written request. Headquarters staff cannot provide consulting services. However, the staff can refer a caller to any of those consultants whose names are on file at AWS Headquarters.

H6. AWS Technical Committees

The activities of AWS technical committees regarding interpretations are limited strictly to the interpretation of provisions of standards prepared by the committees or to consideration of revisions to existing provisions on the basis of new data or technology. Neither AWS staff nor the committees are in a position to offer interpretive or consulting services on (1) specific engineering problems, (2) requirements of standards applied to fabrications outside the scope of the document, or (3) points not specifically covered by the standard. In such cases, the inquirer should seek assistance from a competent engineer experienced in the particular field of interest.

Copyright American Welding Society
Provided by IHS under license with AWS
No reproduction or networking permitted without license from IHS
Licensee=University of Texas Revised Sub Account/5620001114
Not for Resale, 08/29/2012 23:50:47 MDT

List of AWS Documents on Machinery and Equipment

Designation	Title
D14.1/D14.1M	*Specification for Welding Industrial and Mill Crane and Other Material Handling Equipment*
D14.3/D14.3M	*Specification for Welding Earthmoving, Construction, and Agricultural Equipment*
D14.4/D14.4M	*Specification for Welded Joints in Machinery and Equipment*
D14.5/D14.5M	*Specification for Welding of Presses and Press Components*
D14.6/D14.6M	*Specification for Welding of Rotating Elements of Equipment*
D14.7/D14.7M	*Recommended Practices for Surfacing and Reconditioning Industrial Mill Rolls*
D14.8:2009 (ISO/TR 17814:2004)	*Standard Methods for the Avoidance of Cold Cracks*

Copyright American Welding Society
Provided by IHS under license with AWS
No reproduction or networking permitted without license from IHS
Licensee=University of Texas Revised Sub Account/5620001114
Not for Resale, 08/29/2012 23:50:47 MDT

This page is intentionally blank.

Copyright American Welding Society
Provided by IHS under license with AWS
No reproduction or networking permitted without license from IHS

Licensee=University of Texas Revised Sub Account/5620001114
Not for Resale, 08/29/2012 23:50:47 MDT

Copyright American Welding Society
Provided by IHS under license with AWS
No reproduction or networking permitted without license from IHS

Licensee=University of Texas Revised Sub Account/5620001114
Not for Resale, 08/29/2012 23:50:47 MDT